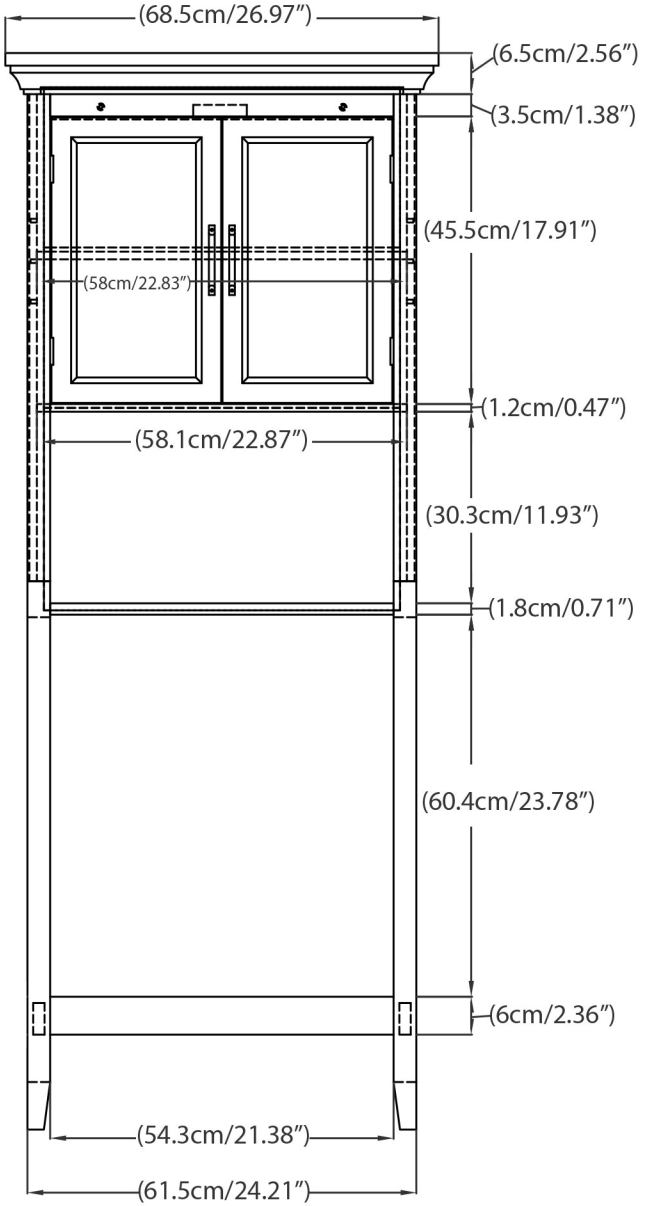

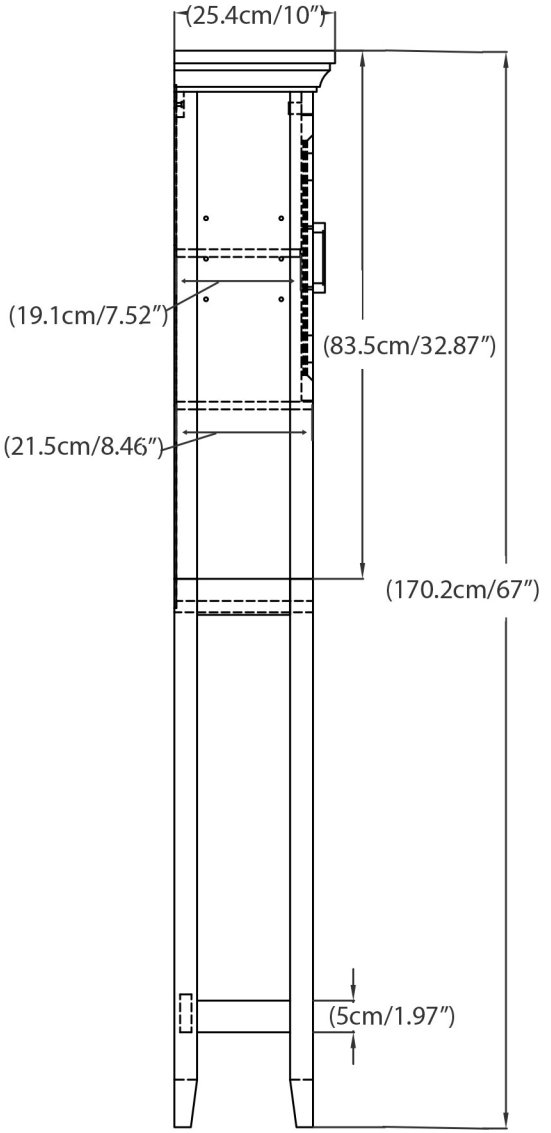

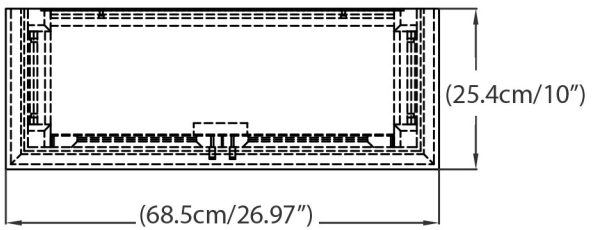

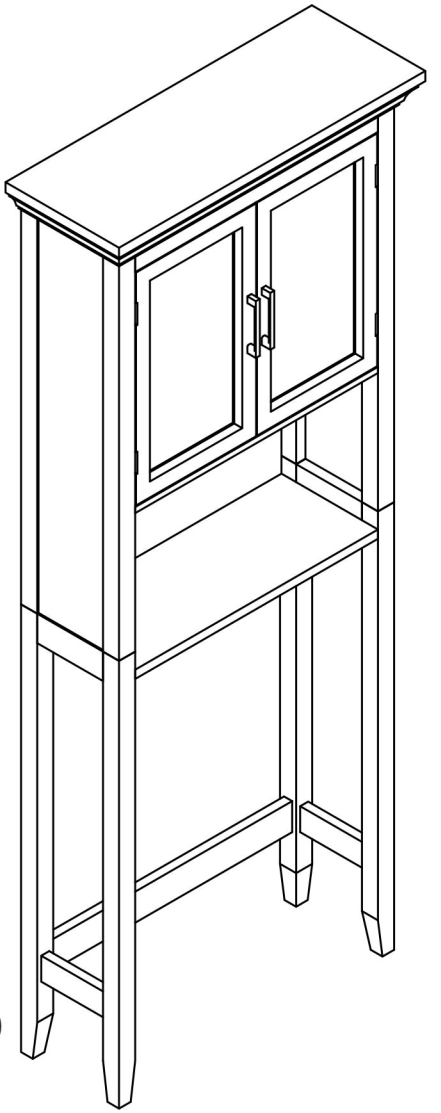

Net Weight: 46.1(lbs)