HOME SOURCE®

ASSEMBLY INSTRUCTION
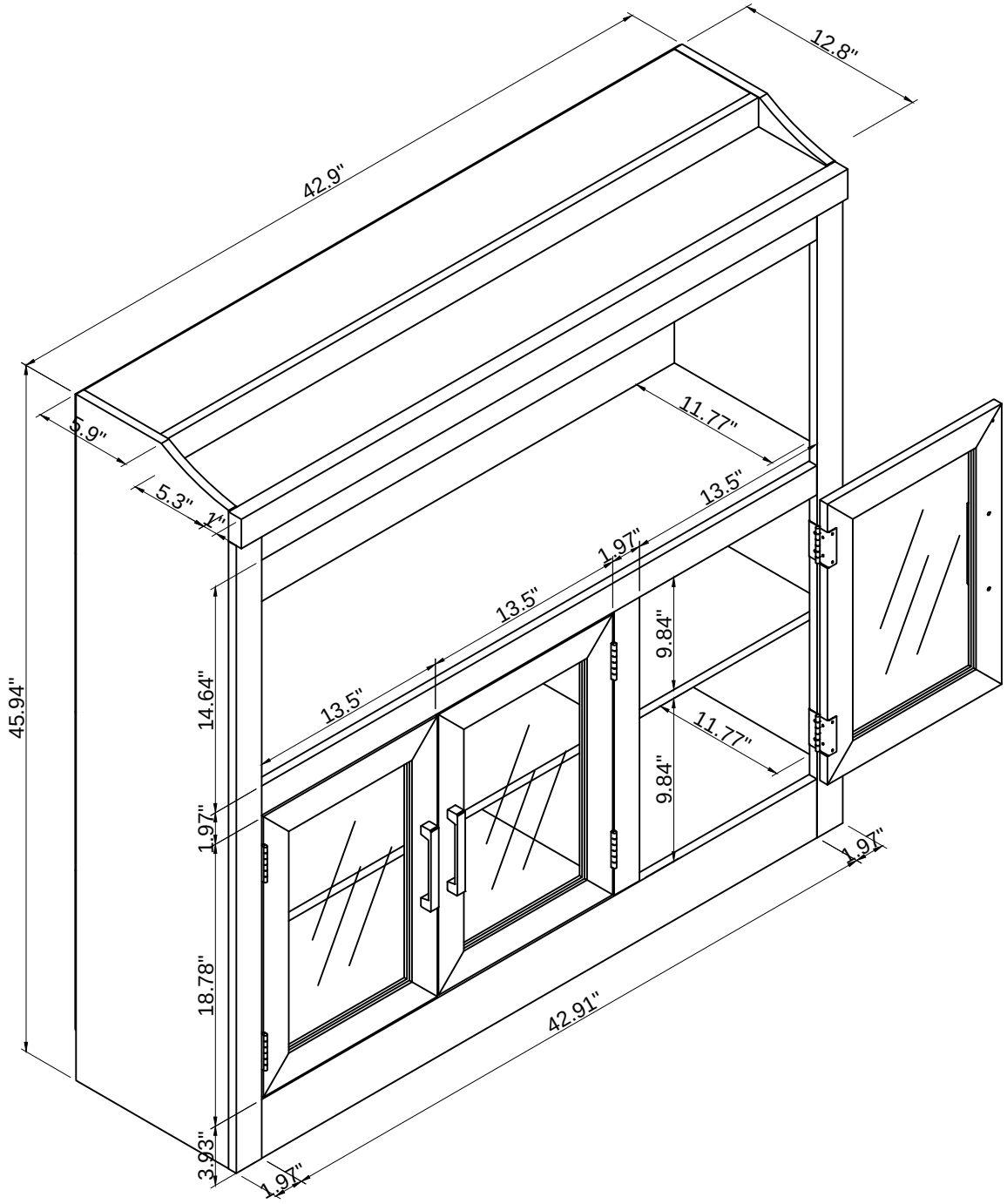
MODEL:JZ53 MOP