TV STAND

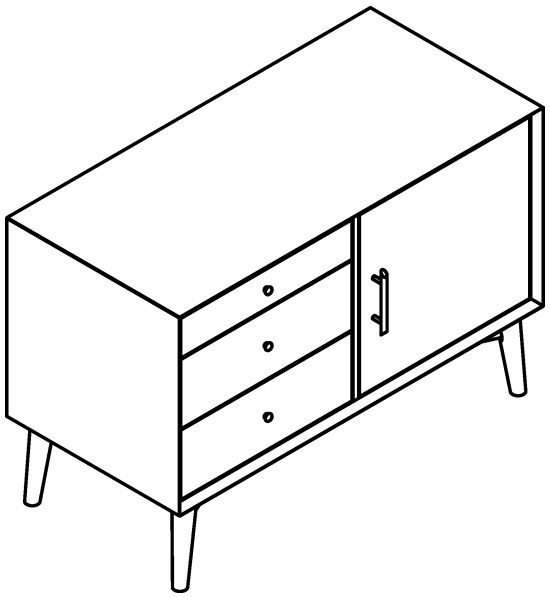

Congratulations! You have purchased a stylish piece of us
We strive to provide fine furniture products, built with quality materials and hand finished details. Please carefully follow the assembly instructions to ensure your furniture is assembled correctly to provide long lasting enjoyment.

Our Products are warranted against defects in material and workmanship for a period of 90 days beginning from the date of sale.

Should you experience any damaged, defective, or missing parts, or need help with assembly, please call us directly before contacting the retailer.

Please see included Care and Maintenance Instructions

Care and Maintenance Instructions

Keeping Your Furniture Beautiful

Quality furniture is a significant investment expected to last for generations. To maintain its beauty and help it last, furniture needs the right care. No finish is totally indestructible. But with regular care, the finish will last much longer, providing years of enjoyment to you.

Tips to Protect and Care for Your Furniture

1. Avoid placing your furniture in direct sunlight, as sunlight causes fading.
2. Avoid extreme changes in temperature by arranging furniture away from radiators, heat and air vents and air conditioning units.
3. Avoid placing plastic or rubber materials (lamp bases, notebooks, placemats, etc.) on your furniture, as certain plastics contain ingredients that may damage the finish.
4. Periodically rotate accessories on furniture so they do not sit in the same spot all the time.
5. Use pads, cloth or felt to protect the furniture surface from plastic, rubber, hot dishes, beverages, bookends, flowerpots and vases.
6. Clean up spills immediately. Use a blotting rather than a wiping action. Water left over a long period of time will cause white spots in the finish. Alcohol, perfume, after-shave and medications can cause severe finish damage.
7. Use a protective pad when writing on the furniture surface.
8. Lift and place objects rather than dragging them across the furniture surface.
9. Avoid placing furniture directly under windows.

Wood Furniture Care: We recommend dusting frequently with a clean, soft, dry, lint-free cloth. Clean the surface by rubbing in the direction of the grain. We recommend polishing your furniture approximately every six months, using a clean, soft, lint-free cloth and rubbing the polish in the direction of the grain. Guardsman furniture polish or any furniture polish that doesn't contain silicone is recommended.

Leather Furniture Care: Wipe spills immediately with clean cloth or sponge. For spots or stains and daily cleaning, clean with mild non-detergent soap. Rinse well, gently wipe off, and allow to air dry. Cleaning Butter, Oil or Grease from Leather: Wipe leather with a clean cloth, and leave alone. The oil will be absorbed by the leather. DO NOT APPLY WATER. Also, do not use saddle soap, cleaning solvents, furniture polish, oils, varnish, abrasive cleaners, ammonia or any other type of chemical solution.

Granite Furniture Care: Our granite is not sealed, so you may want to apply an over-the-counter sealant, which will provide a small amount of surface protection, but we still recommend cleaning spills promptly. Use a slightly damp cloth to clean as needed. Wipe dry. We also do not recommend using abrasive cleaners, chemical solvents, strong detergents, cleaners with bleach, and furniture polish.Be sure to use trivets, coasters, placemats, and adhesive felt pads to help prevent scratches.

Wicker Furniture Care: Regular cleaning is recommended for wicker, as it generally cannot endure harsh or abrasive treatments. This also minimizes mildew buildup. To remove dirt and debris, vacuum with a dust-brush attachment or use a dry paintbrush. Clean with a mild soap solution. Scrub, and rinse. Avoid using too much water, which can weaken the fibers. Avoid sitting on the wicker when still damp, which can cause wicker to sag.

Metal Furniture Care: Because most metals, except aluminum, are subject to rust, metal furniture is usually finished with layers of clear varnish, paint, or a durable powder coating.Use a mild soap solution, and scrub, rinse, and dry. After cleaning, apply a coat of quality liquid or paste auto wax with a lint-free cloth if recommended by the furniture's manufacturer. Use a silicone spray to lubricate swivels and glides on chairs

Butcher Block Care: For best results, clean finished butcher block surfaces with soapy water or commonly available kitchen counter top cleaners. Do not use abrasives or powder cleansers. Do not allow moisture stand on the surface for prolonged periods of time. To sanitize, rinse the butcher block with white vinegar by using a vinegar-water solution in a spray bottle, spritz the butcher block all over. Let sit for a while. While that sits, make a lemon salt mixture by pouring about 1/4 cup salt into a bowl, and stir in enough lemon juice to make a paste, adjust the consistency as you go, to make a workable paste. The final step, using a scrub brush, thoroughly scrub your butcher block with the lemon-salt paste. If the paste gets too dry, sprinkle on a little more lemon juice. Rinse well, and squeegee off as much water as you can, and then let it dry overnight. Make sure to seal it before you get it dirty

again. Pour out a small amount of oil, and rub it into the wood using a cloth or paper towel. As the oil soaks in, add more and continue rubbing and polishing with the grain until the oil is absorbed. The first time you seal your butcher block, it may take several applications before it stops "drinking" oil, but in later cleanings you'll just need to refresh it. Keep adding oil until no more soaks in, remove any excess with a cloth.

Outdoor Cushion Care: Please note our cushions are made from a polyester foam, and the covers are made from a moisture resistant polyester blend. This does not mean they are waterproof! Cushions should be stored and covered when not in use to protect them from rain, sunlight, and other staining agents. We do not recommend leaving cushions out in inclement weather, and if cushions become wet, please dry them immediately by removing the cushion from the cover so they can dry separately. Wring out any excess moisture before drying. Air dry only!

Outdoor Furniture Storage: We highly recommend storing any outdoor furniture during the winter and/or rainy seasons. Before storing your furniture, please ensure all moisture collected in the frame tubes has been drained out and dried. When outdoor furniture is not in use, we recommend covering all the furniture to protect it against the elements.

PART LIST

A 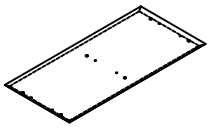	B 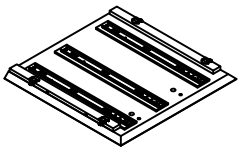	C 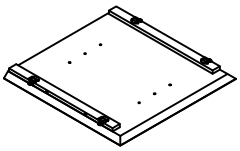	D 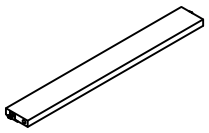	E 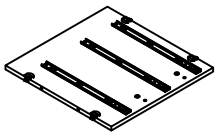
Top Panel 1 PC	Left Side Panel 1 PC	Right Side Panel 1 PC	Front Rail 2 PCS	Dividing Panel 1 PC
F 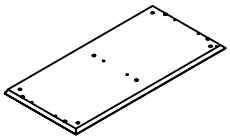	G 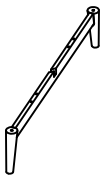	H 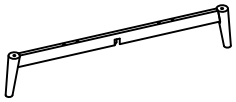	I 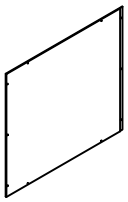	J 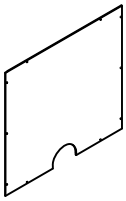
Bottom Panel 1 PC	Front Leg Frame 1 PC	Back Leg Frame 1 PC	Right Back Panel 1 PC	Left Back Panel 1 PC
K 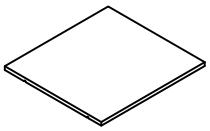	L 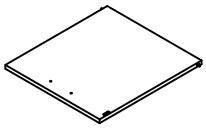	M 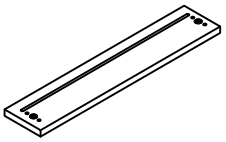	N 	O 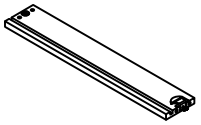
Adjustable Shelf 1 PC	Door Panel 1 PC	Front of Top Drawer 1 PC	Left Side Panel of Top Drawer 1 PC	Right Side Panel of Top Drawer 1 PC
P 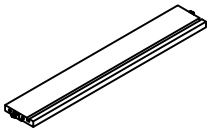	Q 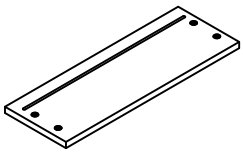	R 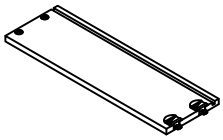	S 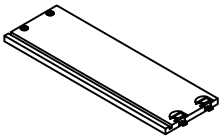	T 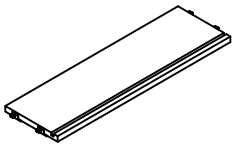
Back Panel of Top Drawer 1 PC	Front of Bottom Drawer 2 PCS	Left Side Panel of Bottom Drawer 2 PCS	Right Side Panel of Bottom Drawer 2 PCS	Back Panel of Bottom Drawer 2 PCS
U 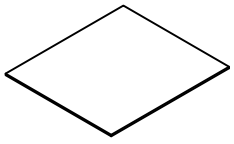				
Bottom Panel of Drawer 3 PCS				

HARDWARE LIST

#1  Ø6x30	#2  Ø8x30	#3  M6x30	#4  M6x60	#5 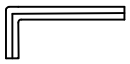 M4
Wood Dowel 25 PCS (Extra 1)	Large Wood Dowel 21 PCS (Extra 1)	Bolt 4 PCS	Long Bolt 4 PCS	Allen Wrench 1 PC
#6 	#7  D6xØ3x12	#8  Ø7x2.5x12mm	#9 Ø8*5*16	#10 
Magnet 1 PC	Magnet Screw 2 PCS	Panel Screw 18 PCS (Extra 1)	Shelf Holder 4 PCS	Knob 3 PCS
#11 	#12 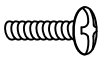 M4x18			
Handle 1 PC	Round Head Bolt 5 PCS			

ADDITIONAL TOOLS (Not Provided)

Note: It is not recommended to use power tools during assembly.

 Phillips Head Screwdriver

Please do not use tools to assemble this unit unless specifically indicated.

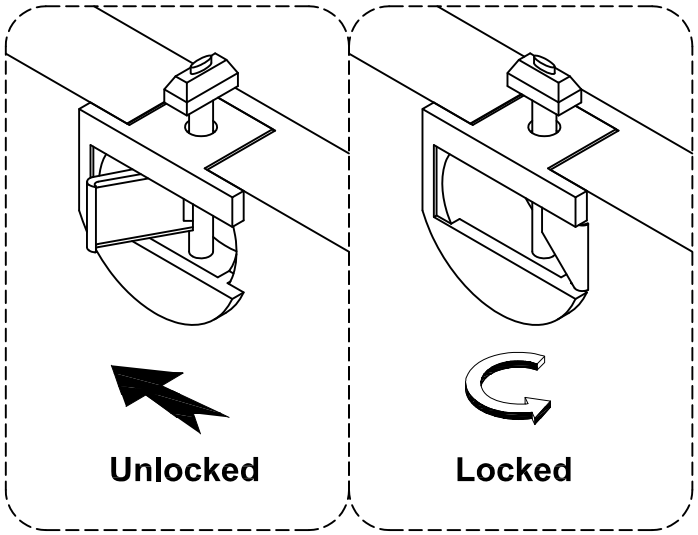

Reference the images above any time the instructions state "lock the hardware".
Note: Be sure to check all hardware is locked when completed.

Step 1. Attach magnet (part #6) to pre-drilled holes of top panel (part A) by using magnet screws (part #7) and phillips head screwdriver.

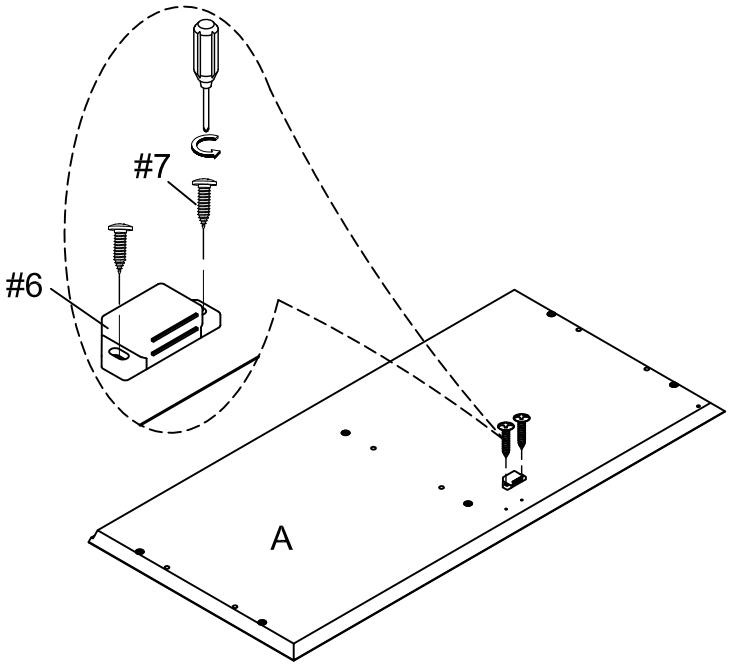

#7 x 2
#6 x 1

Step 2. Attach knobs (part #10) to front of top drawer (part M) and front of bottom drawers (part Q) by using round head bolts (part #12) and phillips head screwdriver.

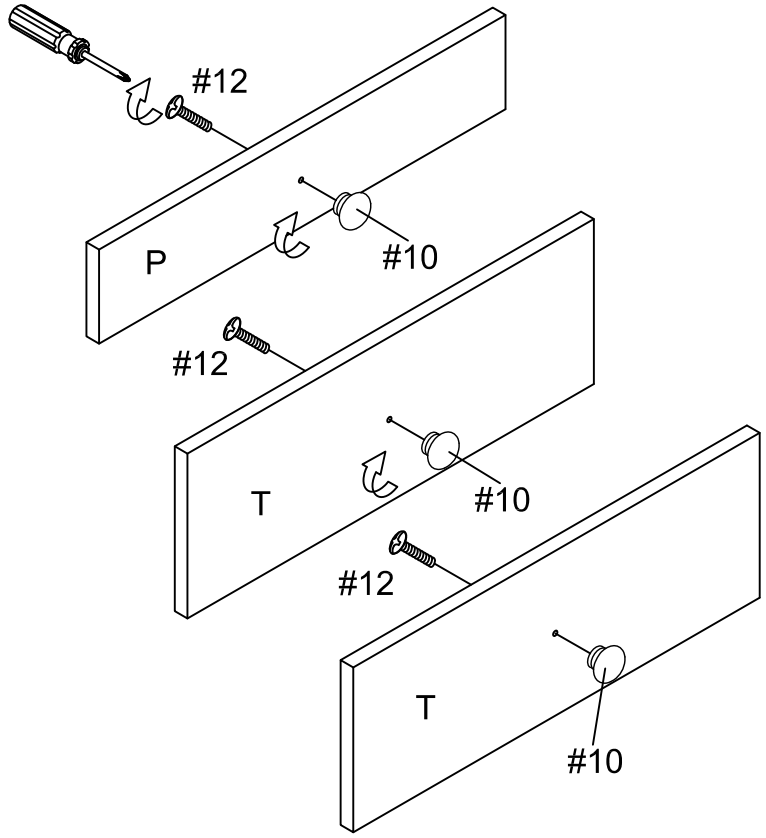

#10 x 3
#12 x 3

Step 3. Attach handle (part #11) to door panel (part L) using round head bolts (part #12) and phillips head screwdriver.

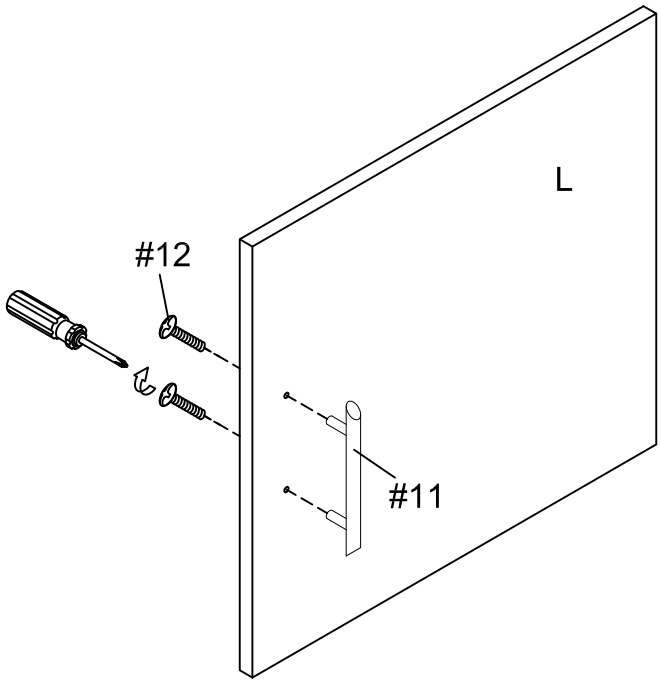

#11 x 1
#12 x 2

Step 4. Attach left side panel of top drawer (part N) and right side panel of top drawer (part O) to back panel of top drawer (part P) by using wood dowels (part #1) and lock the hardware. Slide bottom panel of drawer (part U) into the grooves of left side panel of top drawer (part N) and right side panel of top drawer (part O). Attach front of top drawer (part M) to left side panel of top drawer (part N) and right side panel of top drawer (part O) by using wood dowels (part #1) and lock the hardware.

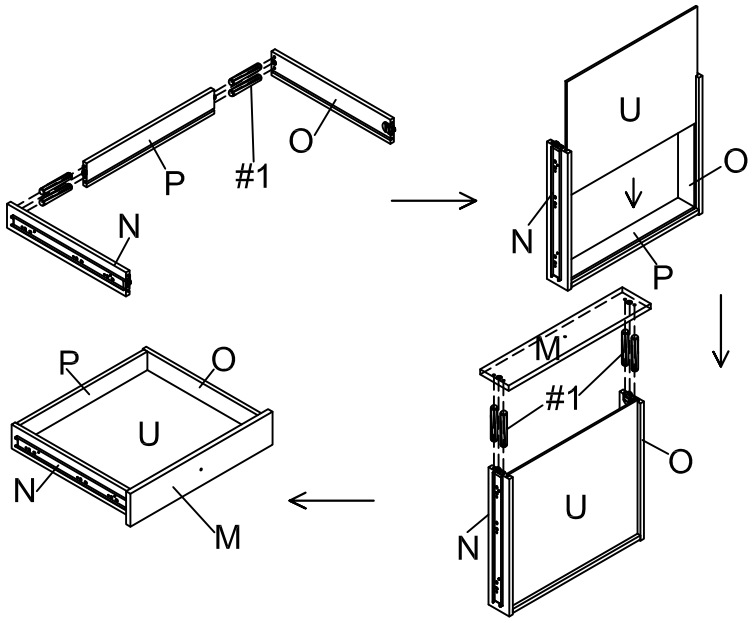

#1 x 8

Step 5. Attach left side panels of bottom drawers (part R) and right side panels of bottom drawers (part S) to back panels of bottom drawers (part T) by using wood dowels (part #1) and lock the hardware. Slide bottom panels of drawers (part U) into the grooves of left side panels of bottom drawers (part R) and right side panels of bottom drawers (part S). Attach front of bottom drawers (part Q) to left side panels of bottom drawers (part R) and right side panels of bottom drawers (part S) and lock the hardware.

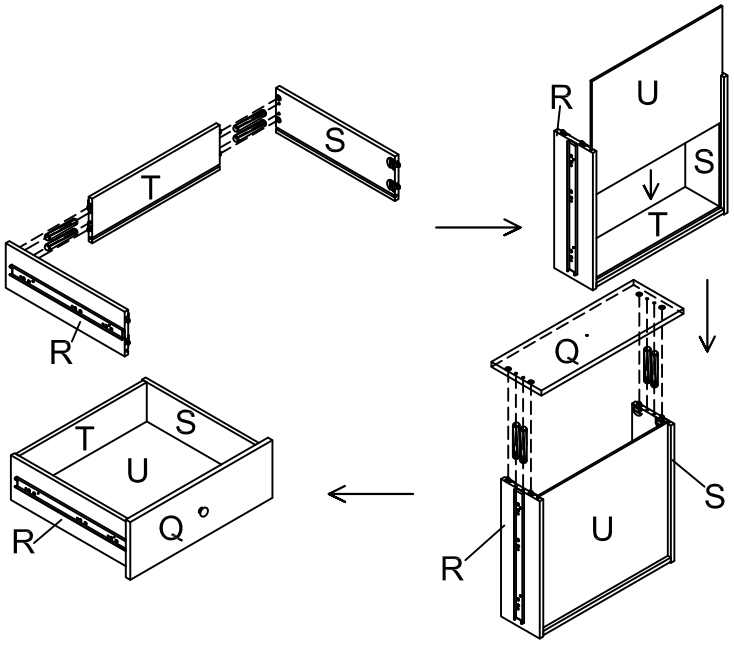

#1 x 16

Step 6. Attach back leg frame (part H) to bottom panel (part F) by using large wood dowels (part #2), long bolts (part #4) and allen wrench (part #5).

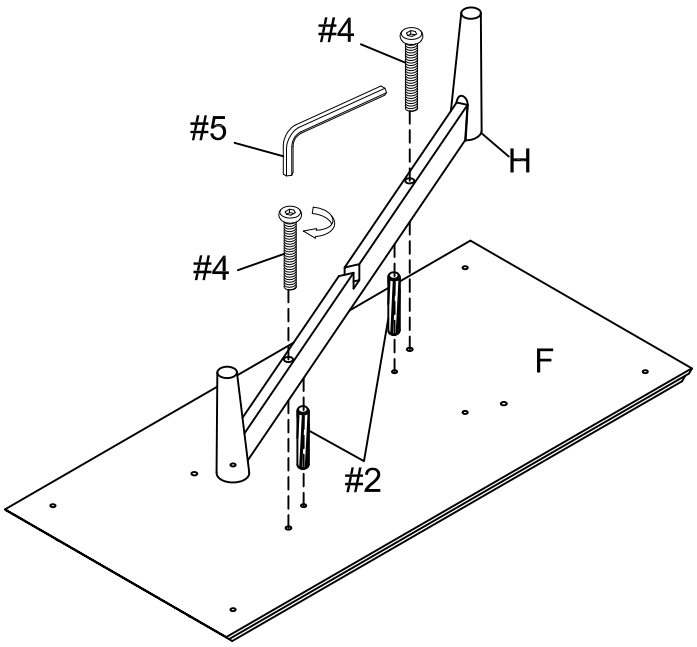

#2 x 2
#4 x 2
#5 x 1

Step 7. Attach front leg frame (part G) to bottom panel (part F) by using large wood dowels (part #2), long bolts (part #4) and allen wrench (part #5).

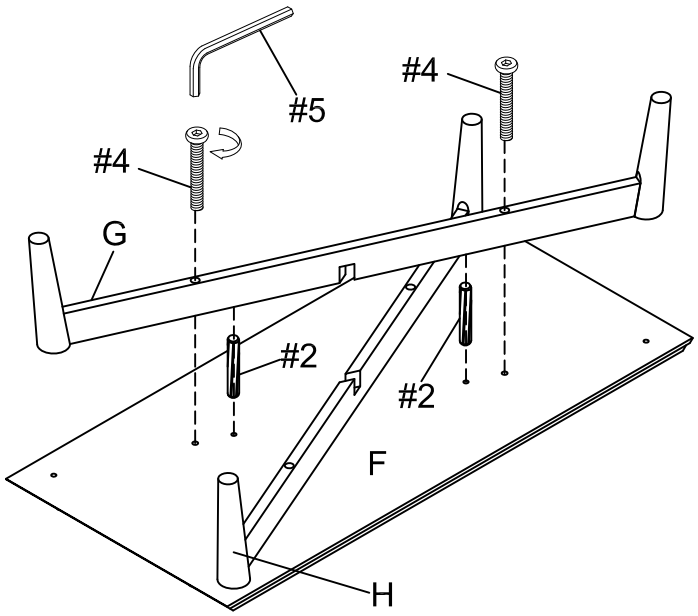

#2 x 2
#4 x 2
#5 x 1

Step 8. Insert bolts (part #3) into bottom panel (part F) by using allen wrench (part #5).

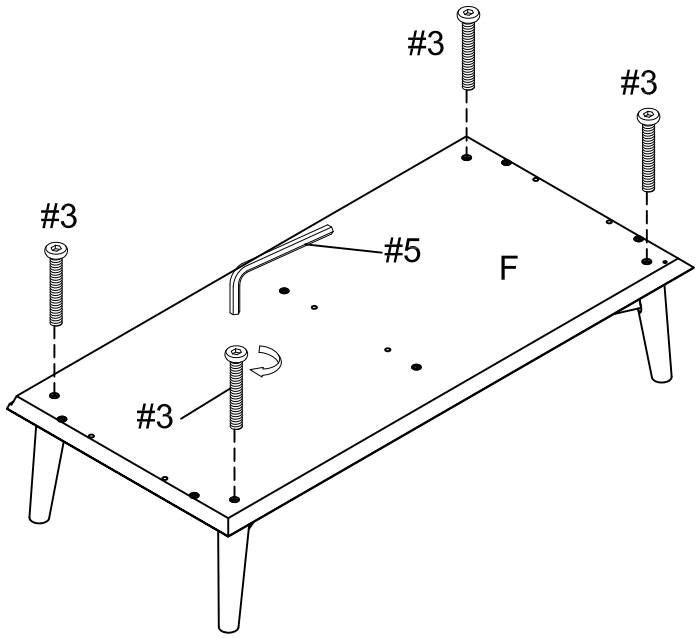

#3 x 4
#5 x 1

Step 9. Attach front rails (part D) to dividing panel (part E) by using large wood dowels (part #2) and lock the hardware.

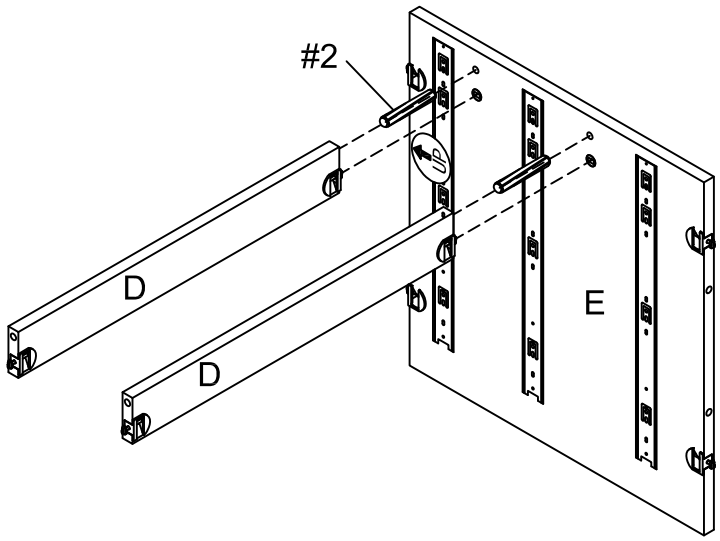

#2 x 2

Step 10. Attach left side panel (part B) to front rails (part D) by using large wood dowels (part #2) and lock the hardware.

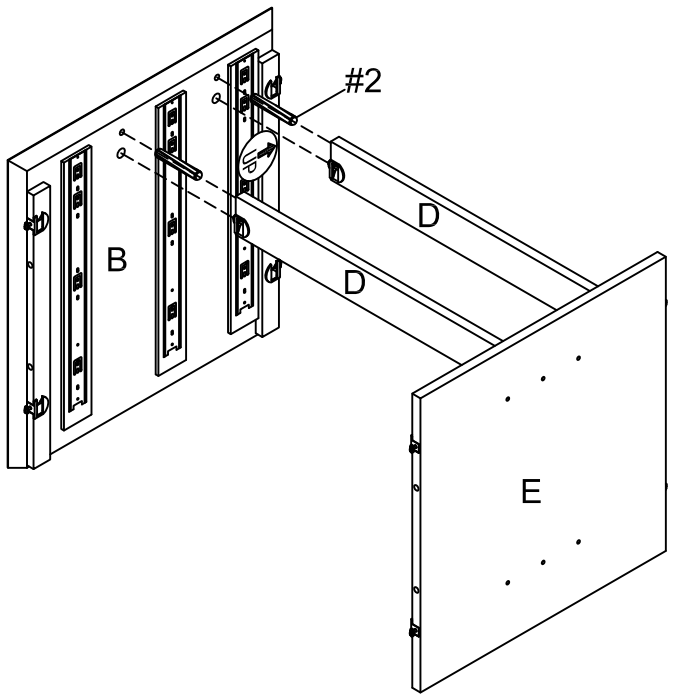

#2 x 2

Step 11. Attach left side panel (part B) and dividing panel (part E) to bottom panel (part F) by using large wood dowels (part #2) and lock the hardware.

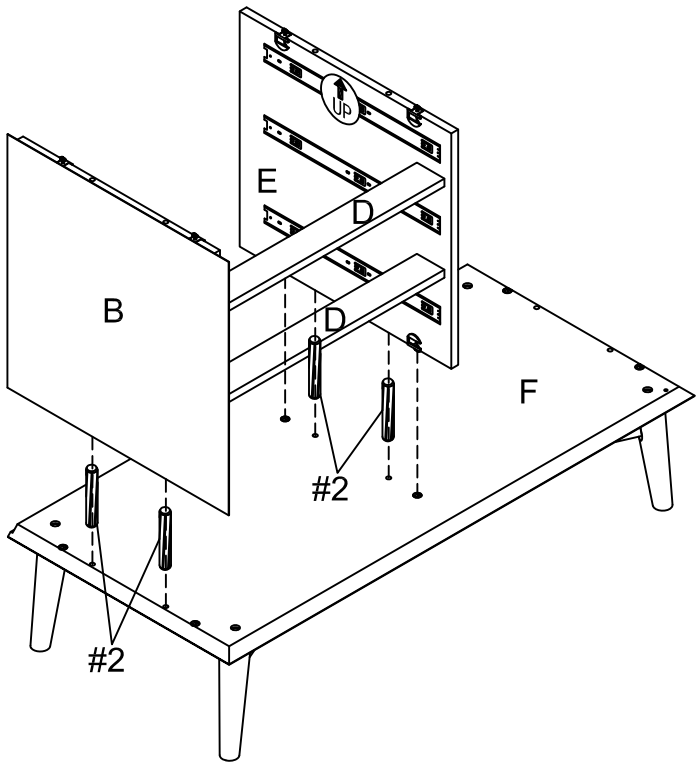

#2 x 4

Step 12. Attach right side panel (part C) to bottom panel (part F) by using large wood dowels (part #2) and lock the hardware.

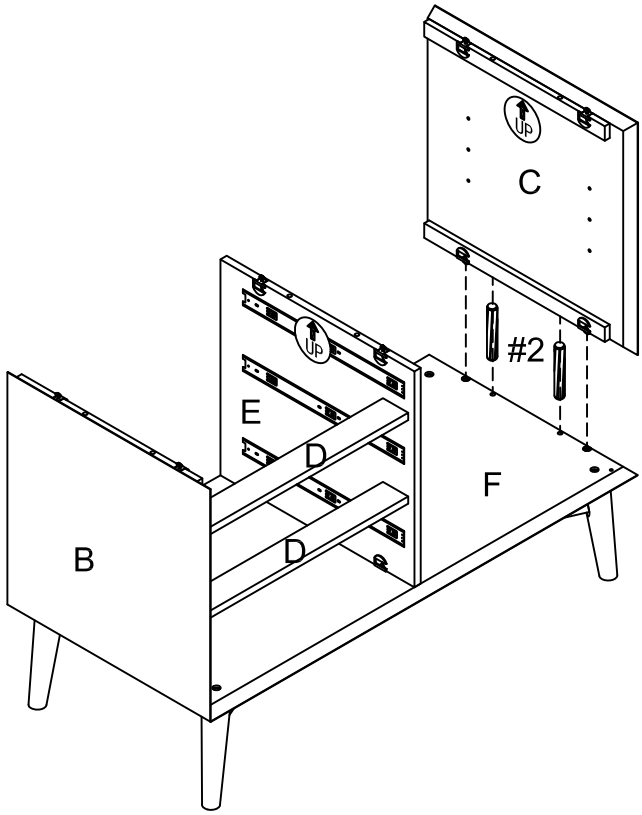

#2 x 2

Step 13. Attach top panel (part A) to left side panel (part B), dividing panel (part E) and right side panel (part C) by using large wood dowels (part #2) and lock the hardware.

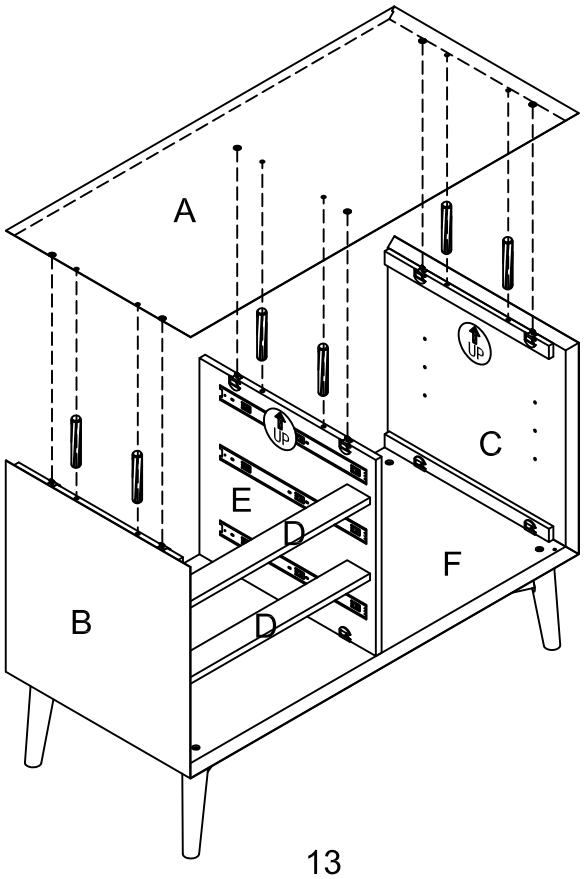

#2 x 6

Step 14. Attach left back panel (part J) to top panel (part A), right side panel (part C), dividing panel (part E) and bottom panel (part F) by using panel screws (part #8) and phillips head screwdriver.

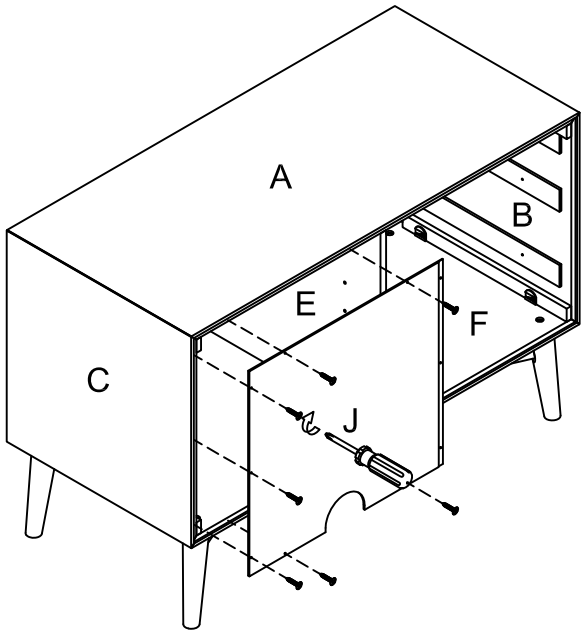

#8 x 7

Step 15. Attach right back panel (part I) to top panel (part A), left side panel (part B), dividing panel (part E) and bottom panel (part F) by using panel screws (part #8) and phillips head screwdriver.

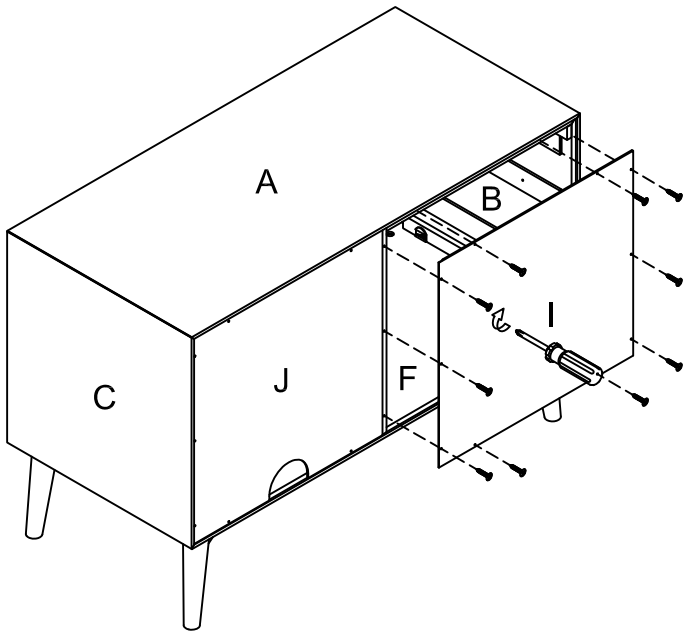

#8 x 10

Step 16. Insert shelf holders (part #9) into desired position and slide adjustable shelf (part K) into place.

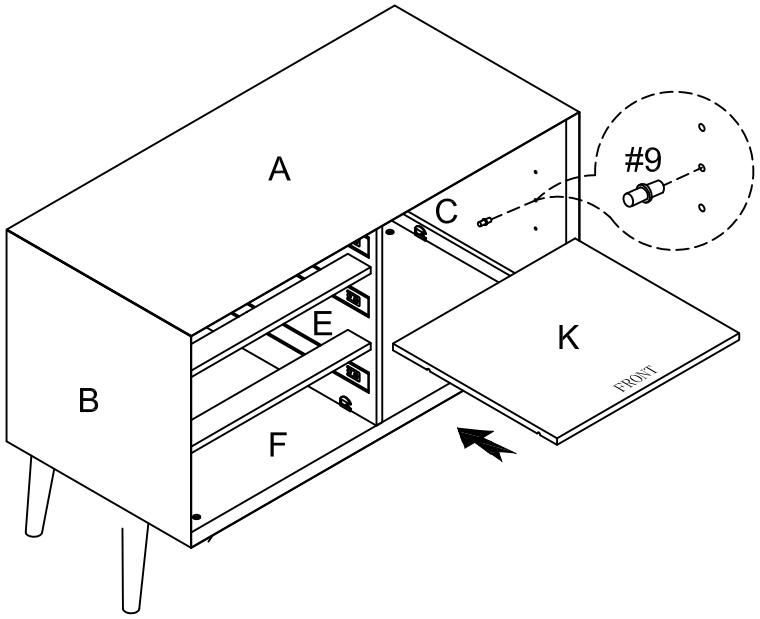

#9 x 4

Step 17. Attach door panel (part L) to top panel (part A) and bottom panel (part F) by using hinges (pre-assembled).

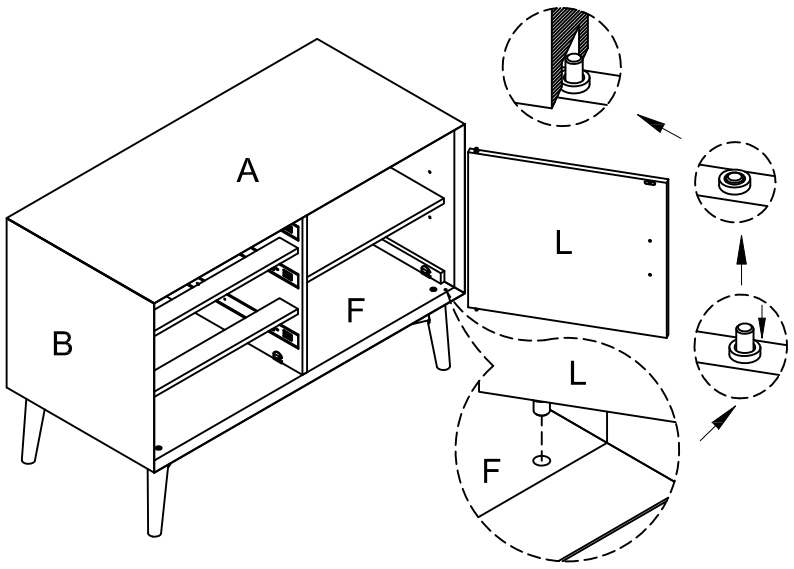

Step 18. Slide completed drawers into place.

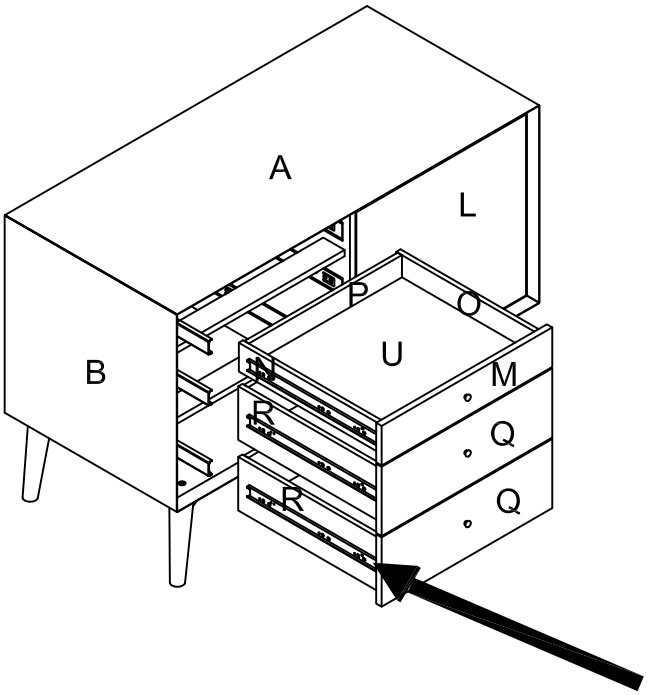

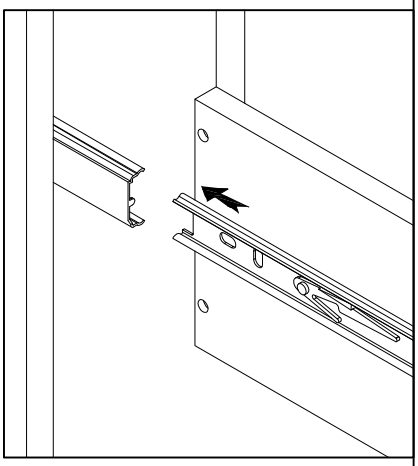

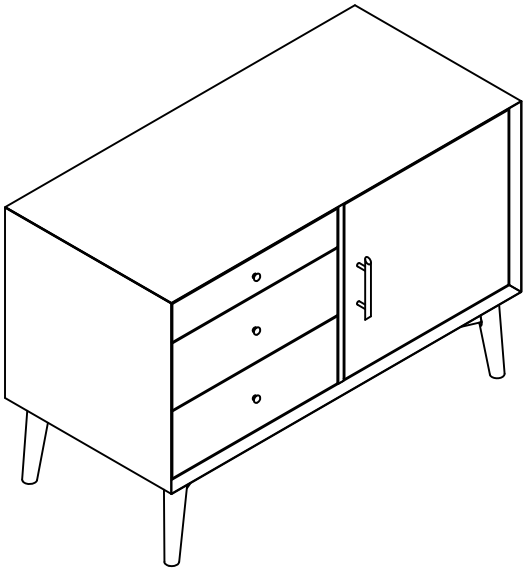

Limited Manufactures Warranty

Our Products are warranted against defects in material and workmanship for a period of 90 days beginning from the date of sale.

Should you experience any damaged, defective, or missing parts, or need help with assembly, please call us directly

This warranty gives the purchaser specified legal rights in addition to any rights which may vary from state to state. In accordance with the "Moss-Magnuson Warranty Act" of July 10th, 1975, this is termed a "limited warranty" which in no way compromises our high standards of Quality and Workmanship.