Produktanleitung(DE)
Noticed’emploi(FR)
Instructionmanual(EN)

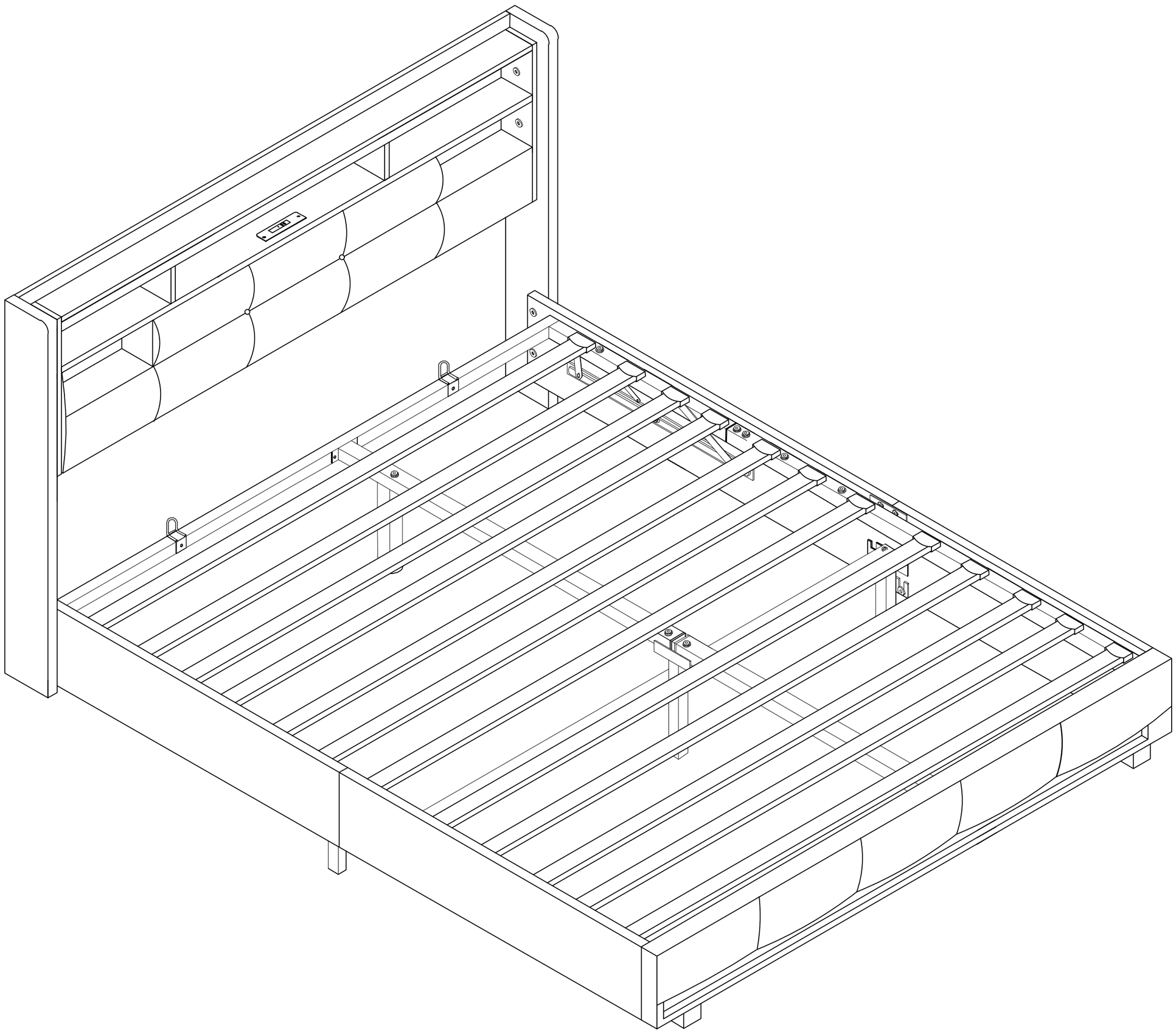

A0477#FULL/QUEEN

Stückliste(DE)/Liste des pièces(FR)/Part List(EN)

1:

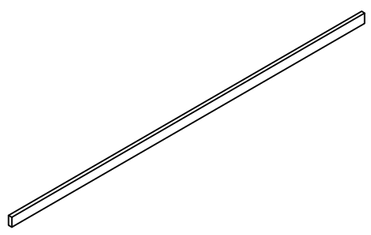

1PC

2:

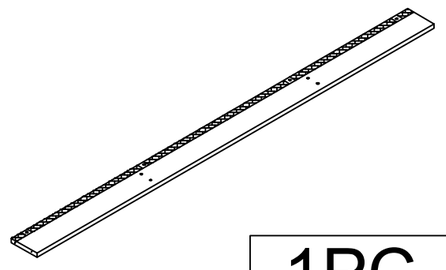

1PC

3:

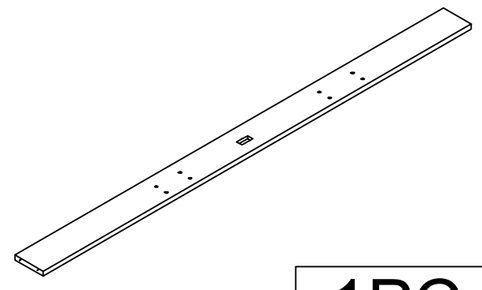

1PC

4:

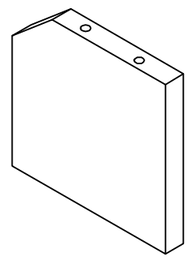

2PCS

5:

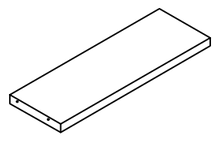

2PCS

6:

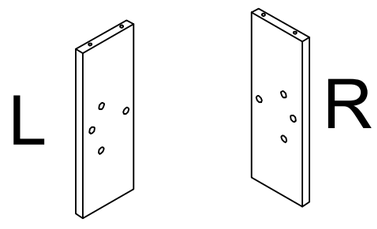

2PCS

7:

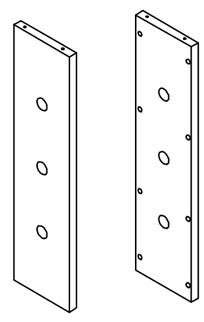

2PCS

8:

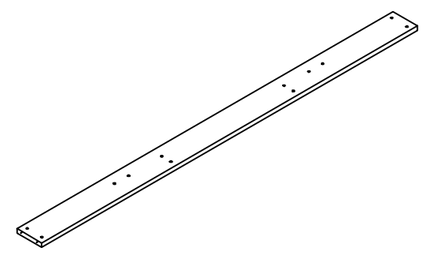

1PC

9:



1PC

10:

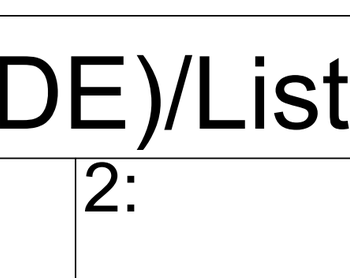

1PC

11:

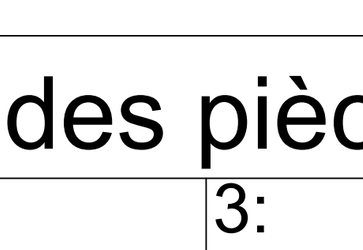

1PC

12:



1SET

13:



1PC

14:

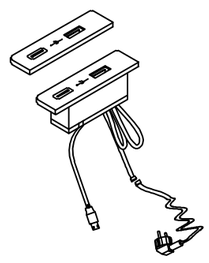

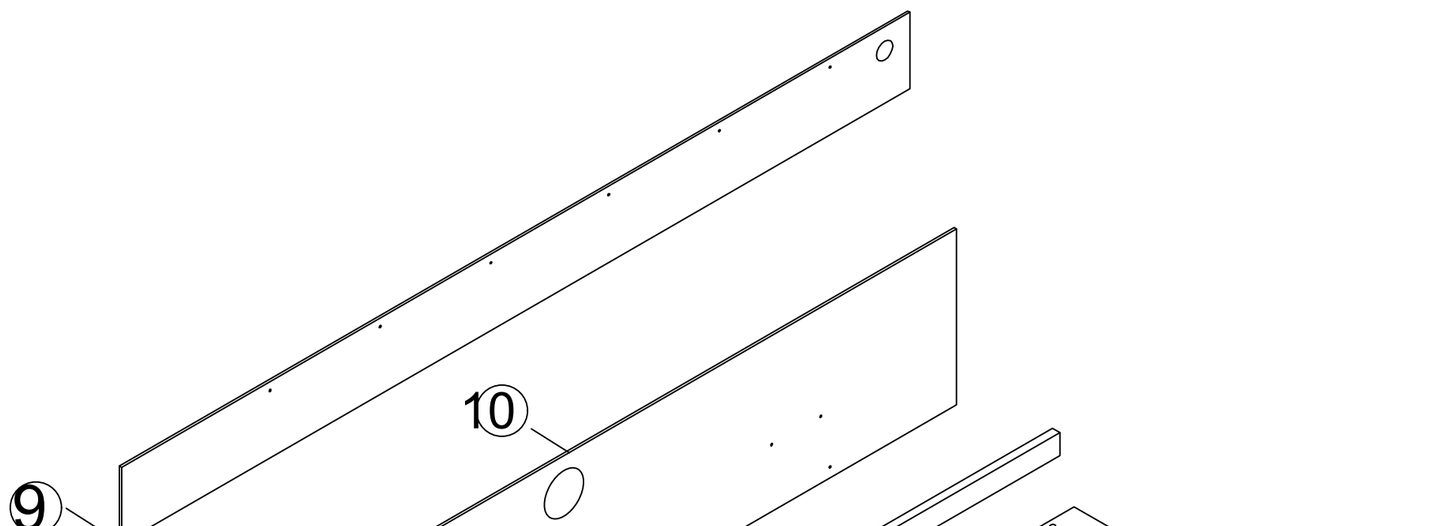

Stückliste(DE)/Liste des pièces(FR)/Part List(EN)

15: 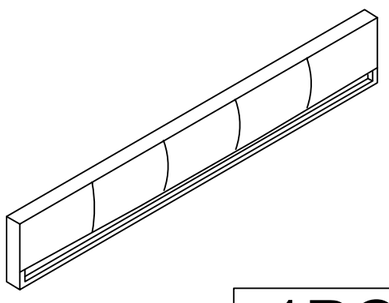 1PC	16: L 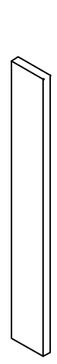 R 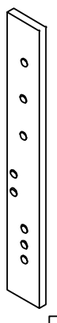 1PC	17: 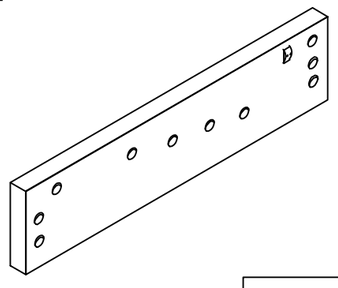 1PC	18: 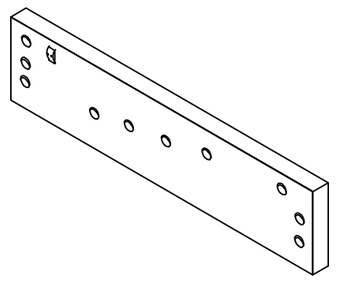 1PC
19: 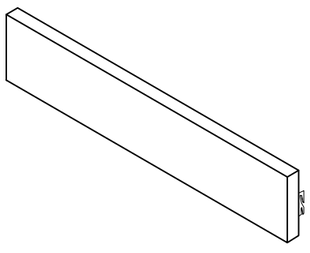 1PC	20: 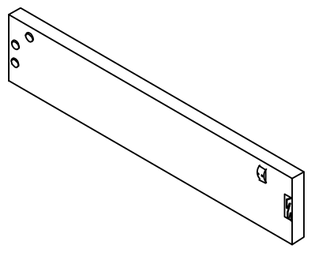 1PC	21: 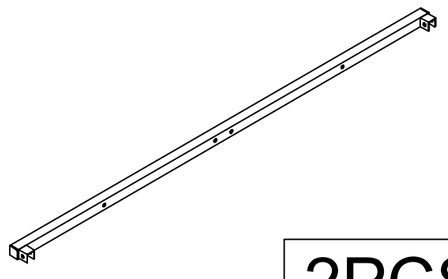 2PCS	22: 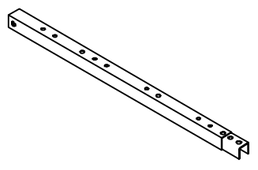 2PCS
23: 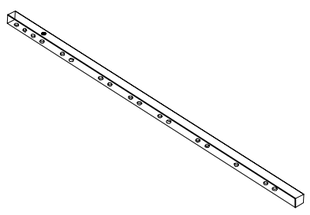 2PCS	24: 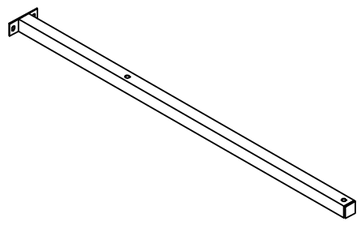 1PC	25: 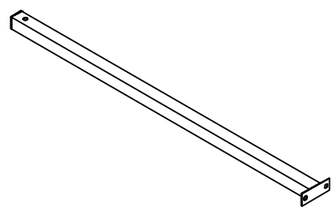 1PC	26: 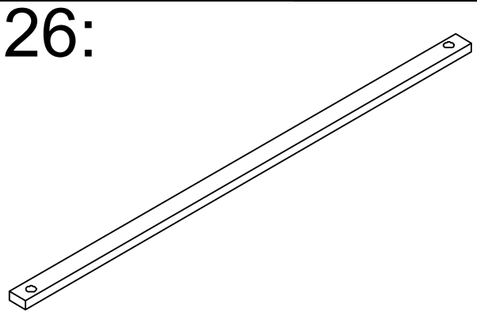 1PC
27: 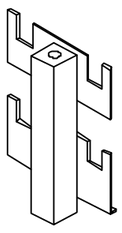 2PCS	28: 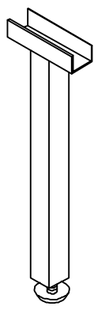 1PC	29: 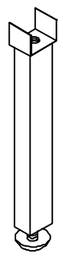 1PC	30: 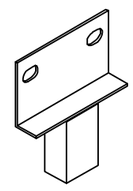 2PCS
31: 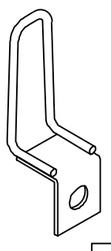 2PCS	32: 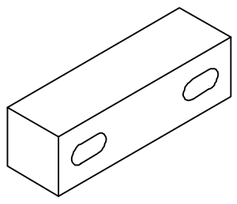 1PC	33: 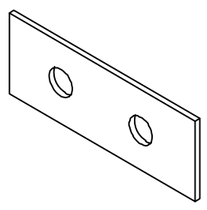 2PCS	34:  4PCS
35: 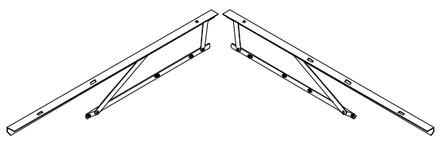 2PCS	36: 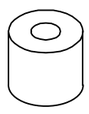 8+1PCS	37: 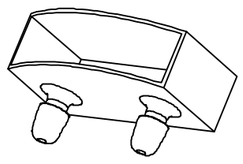 24PCS	38: 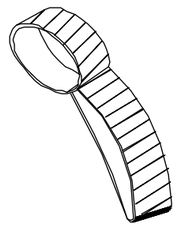 1PC
39: 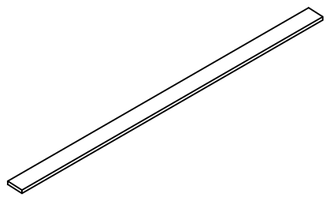 12PCS	40: 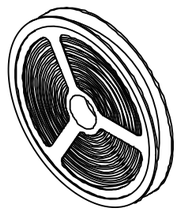 1PC	41: 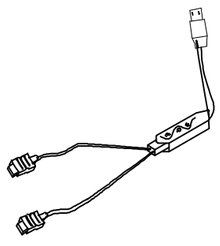 1PC	42: 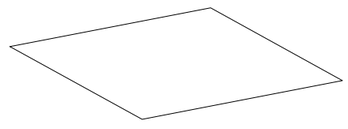 1PC

EISENWARE-LISTE(DE)/LISTE DE MATÉRIEL(FR)

A: 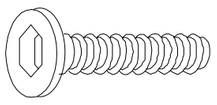 5/16"*35mm 12+1PCS	B: 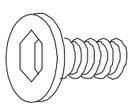 5/16"*25mm 10+1PCS	C: 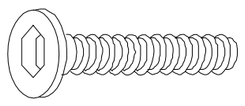 5/16"*50mm 2PCS	D: 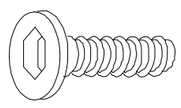 1/4"*35mm 8+1PCS
E: 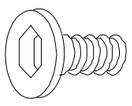 1/4"*25mm 4PCS	F: 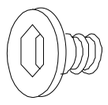 1/4"*15mm 32+2PCS	G: 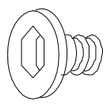 1/4"*10mm 4PCS	H: 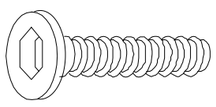 5/16"*40mm 19+2PCS
I: 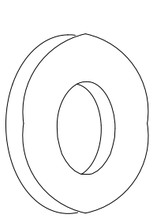 5/16"*19mm 43+2PCS	J: 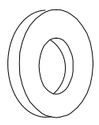 1/4"*16mm 46+2PCS	K: 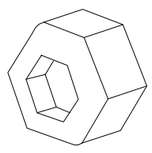 5/16" 16+2PCS	L: 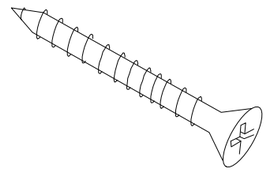 M4*35mm 62+2PCS
M: 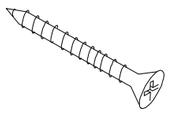 M3*15mm 2PCS	N: 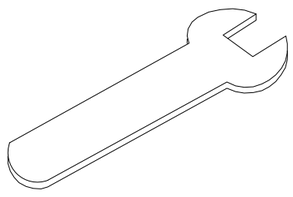 5/16" 1PC	O: 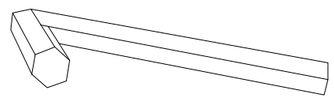 5/16"*100mm 1PC	P: 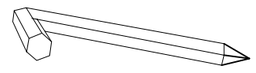 1/4"*65mm 1PC

STEP 1:

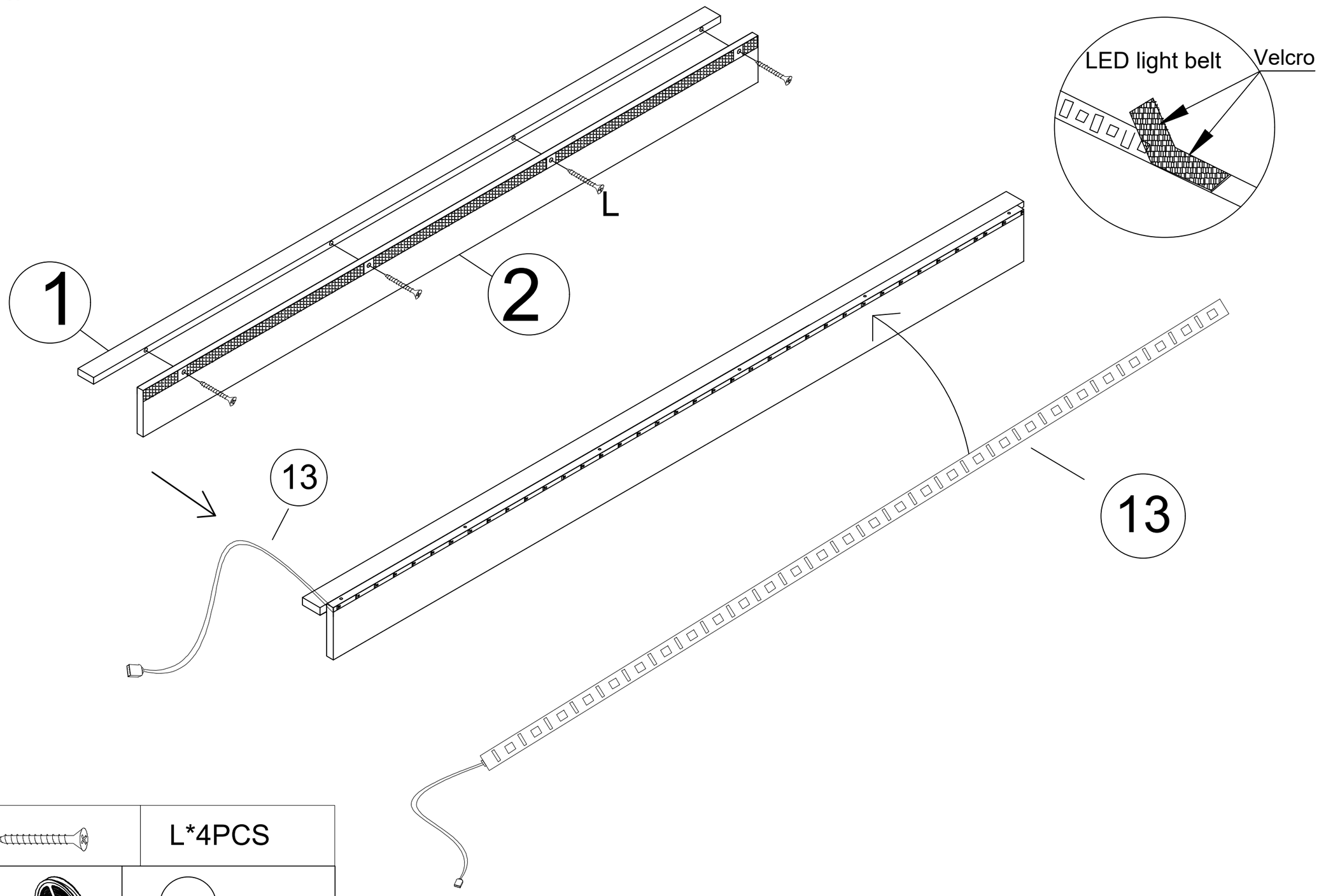

	L*4PCS
	13 *1PC

STEP 2: M

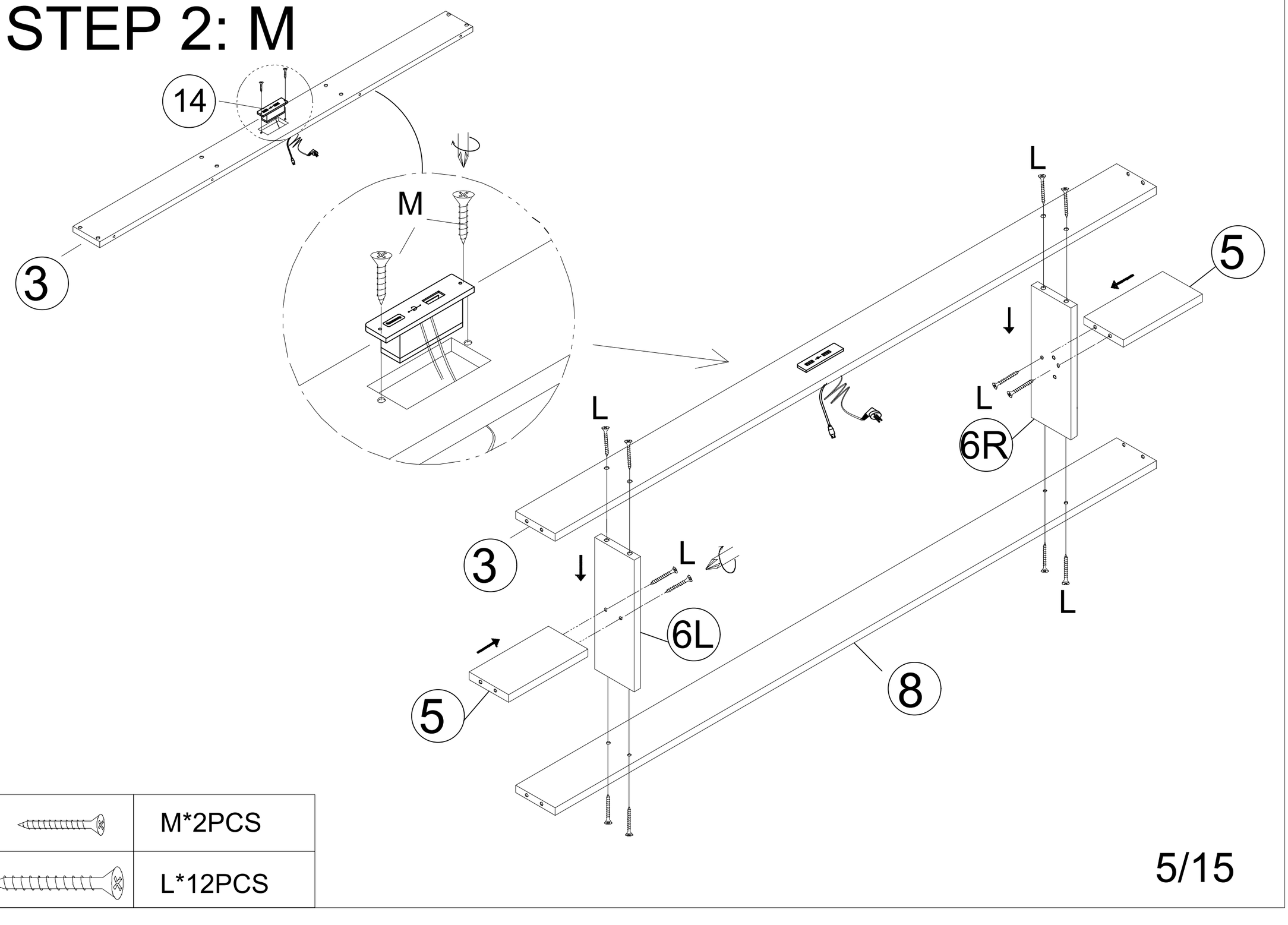

	M*2PCS
	L*12PCS

STEP 3:

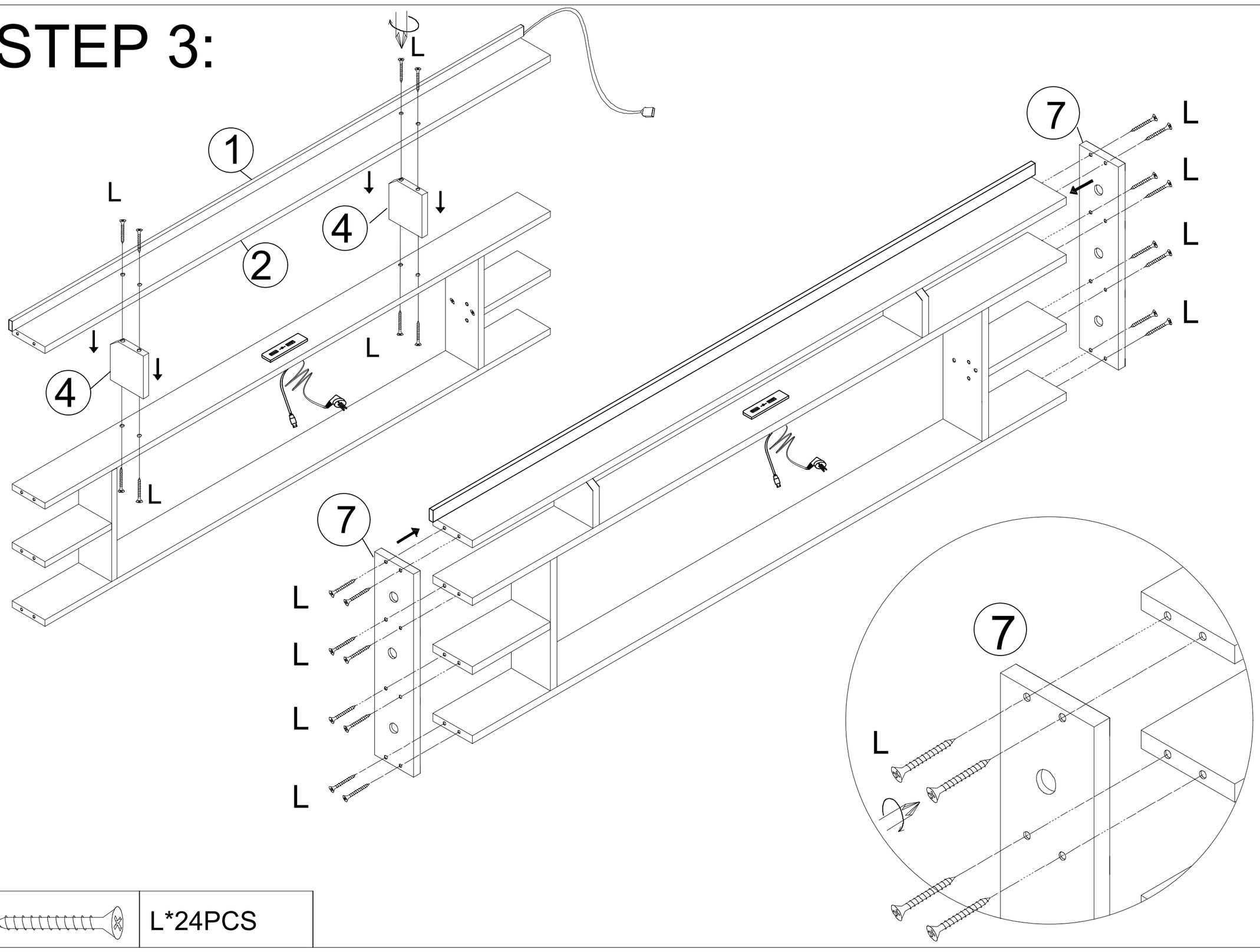
1
2
4
4
7
7
L
L
L

STEP 5:

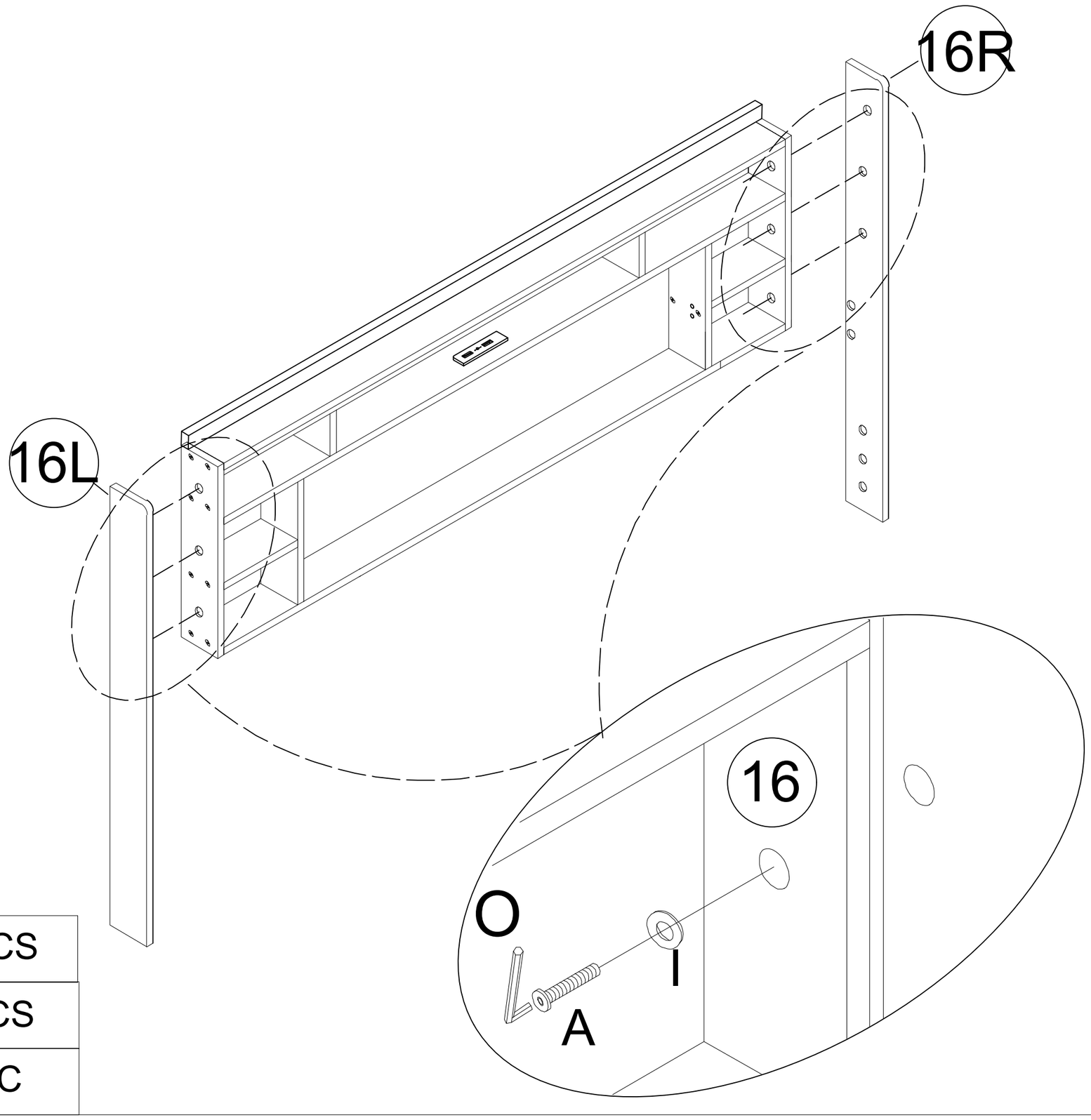

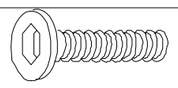	A X6PCS
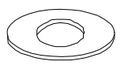	I X 6PCS
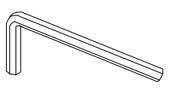	O X1PC

STEP 6:

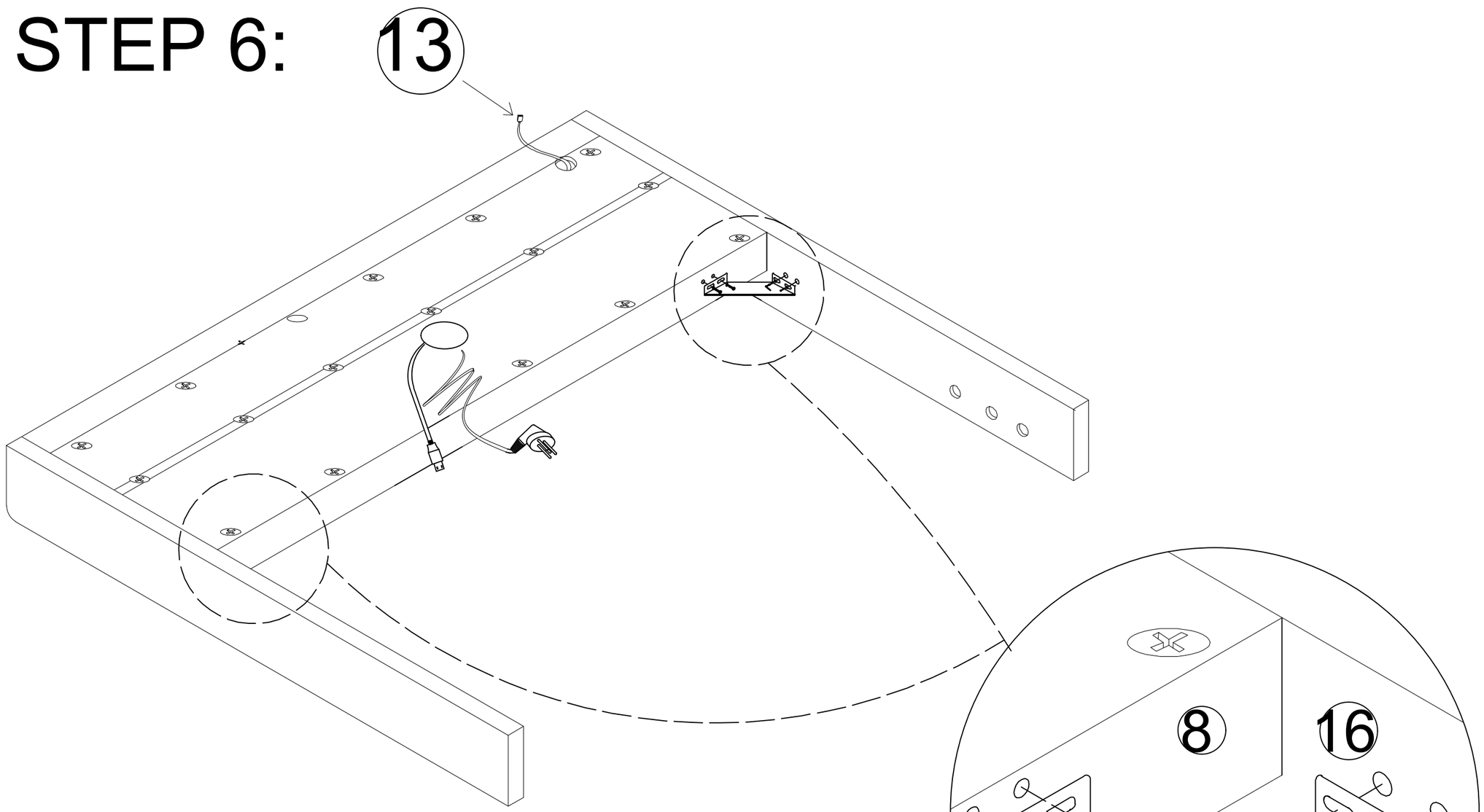

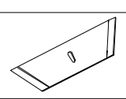	34 X 2PCS
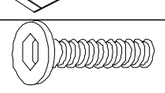	F X 8PCS
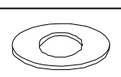	J X 8PCS
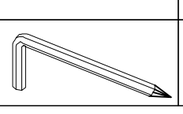	P X1PC

STEP 7:

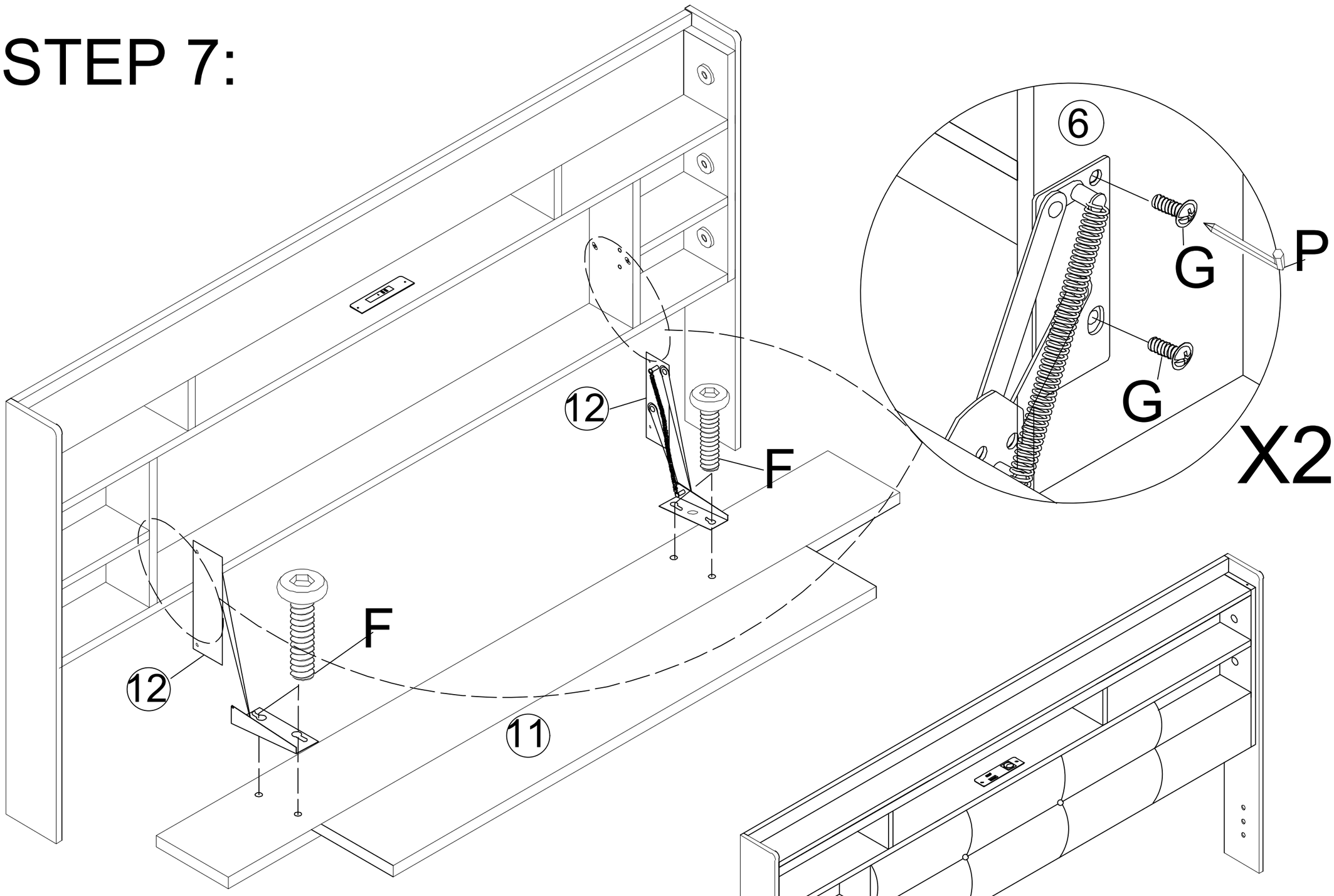

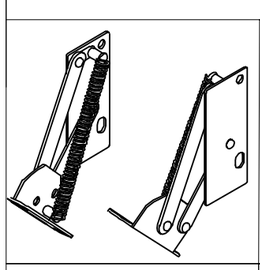

12 X 2PCS

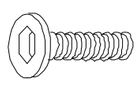

F X 4PCS

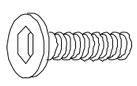

G X 4PCS

STEP 8:

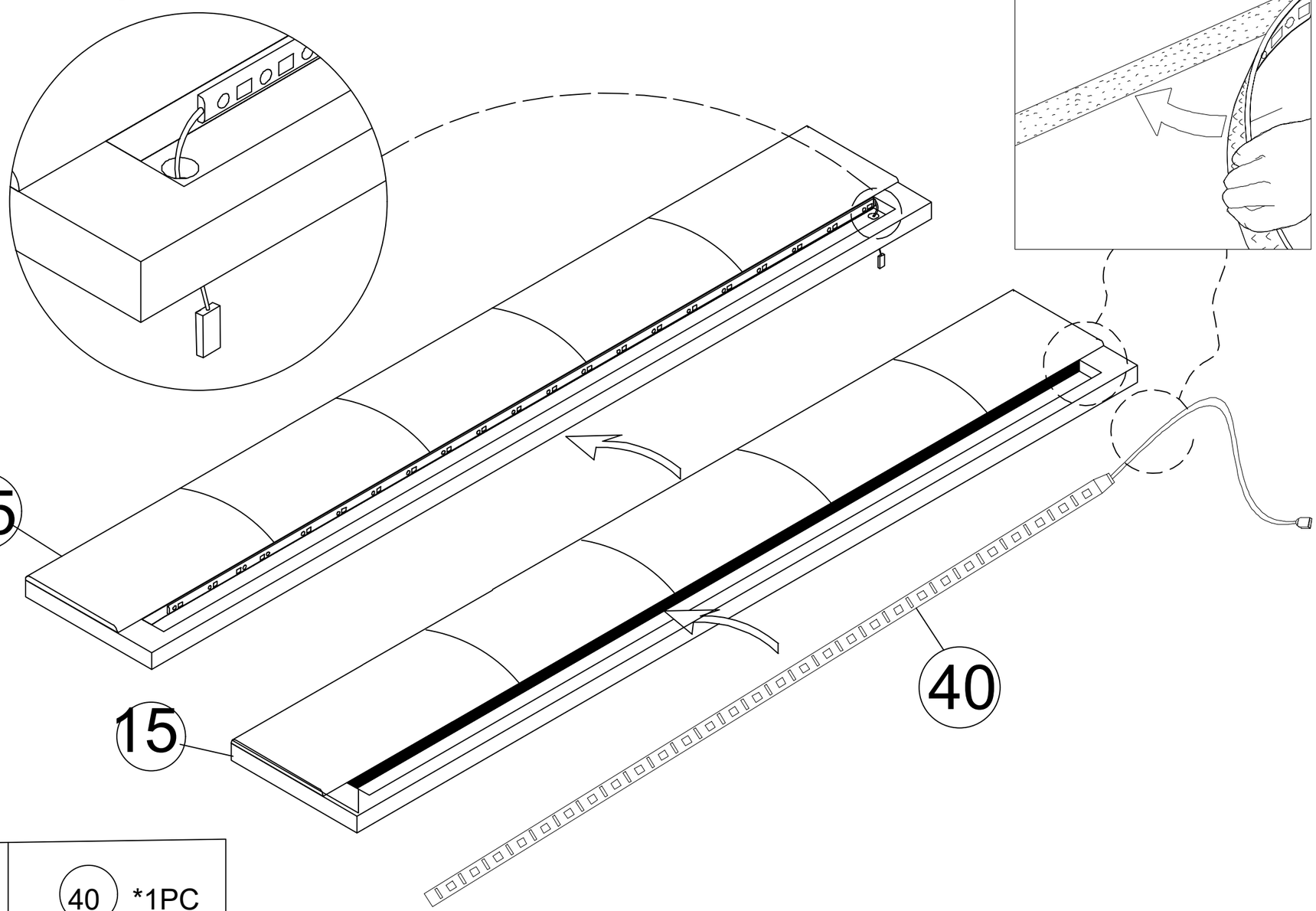



40 *1PC

STEP 9:

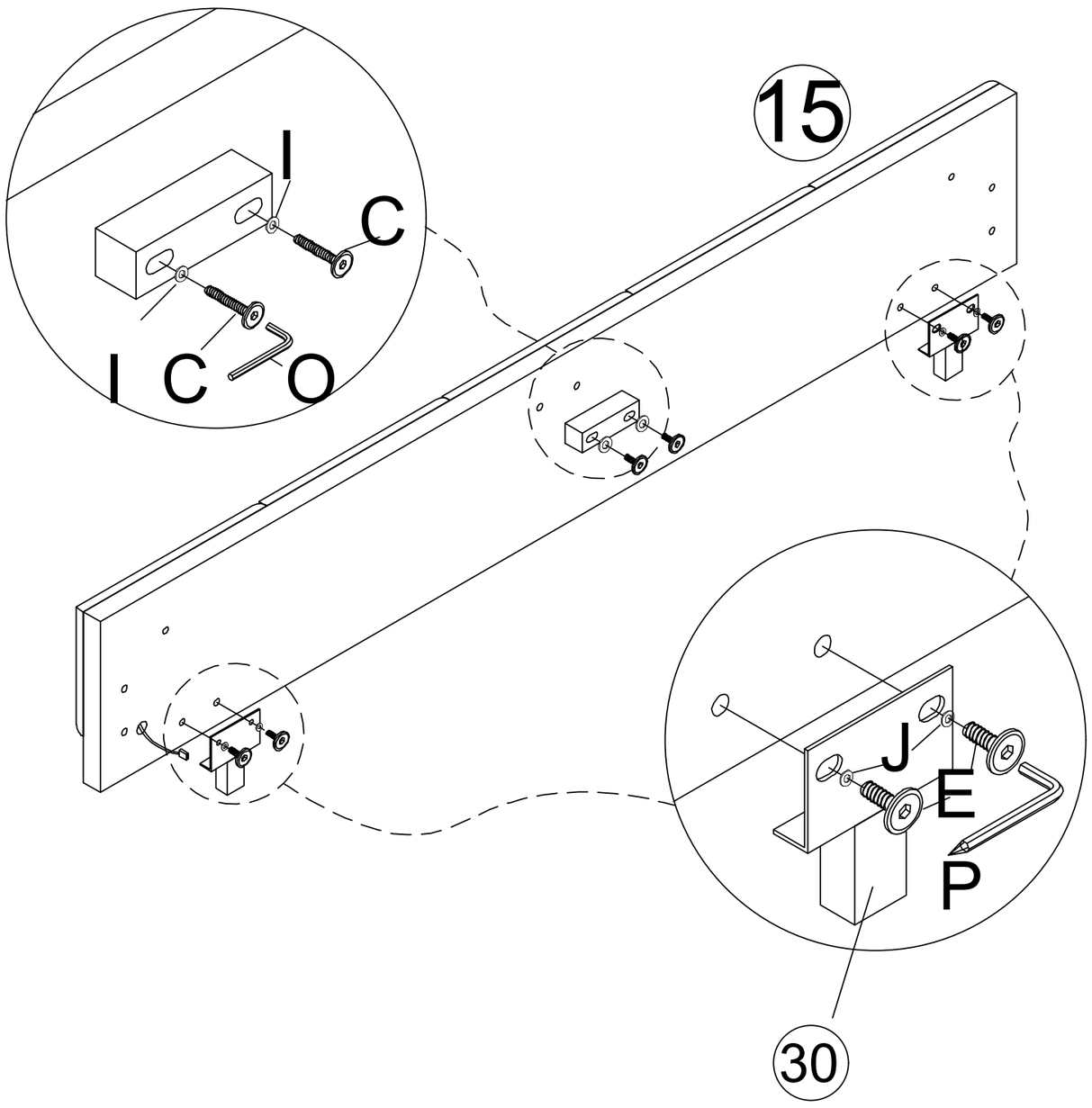

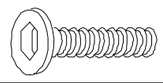	C X2PCS
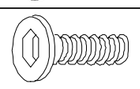	E X 4PCS
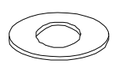	I X 2PCS
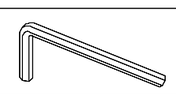	O X1PC
	P X1PC
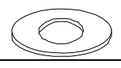	J X 4PCS

STEP 10:

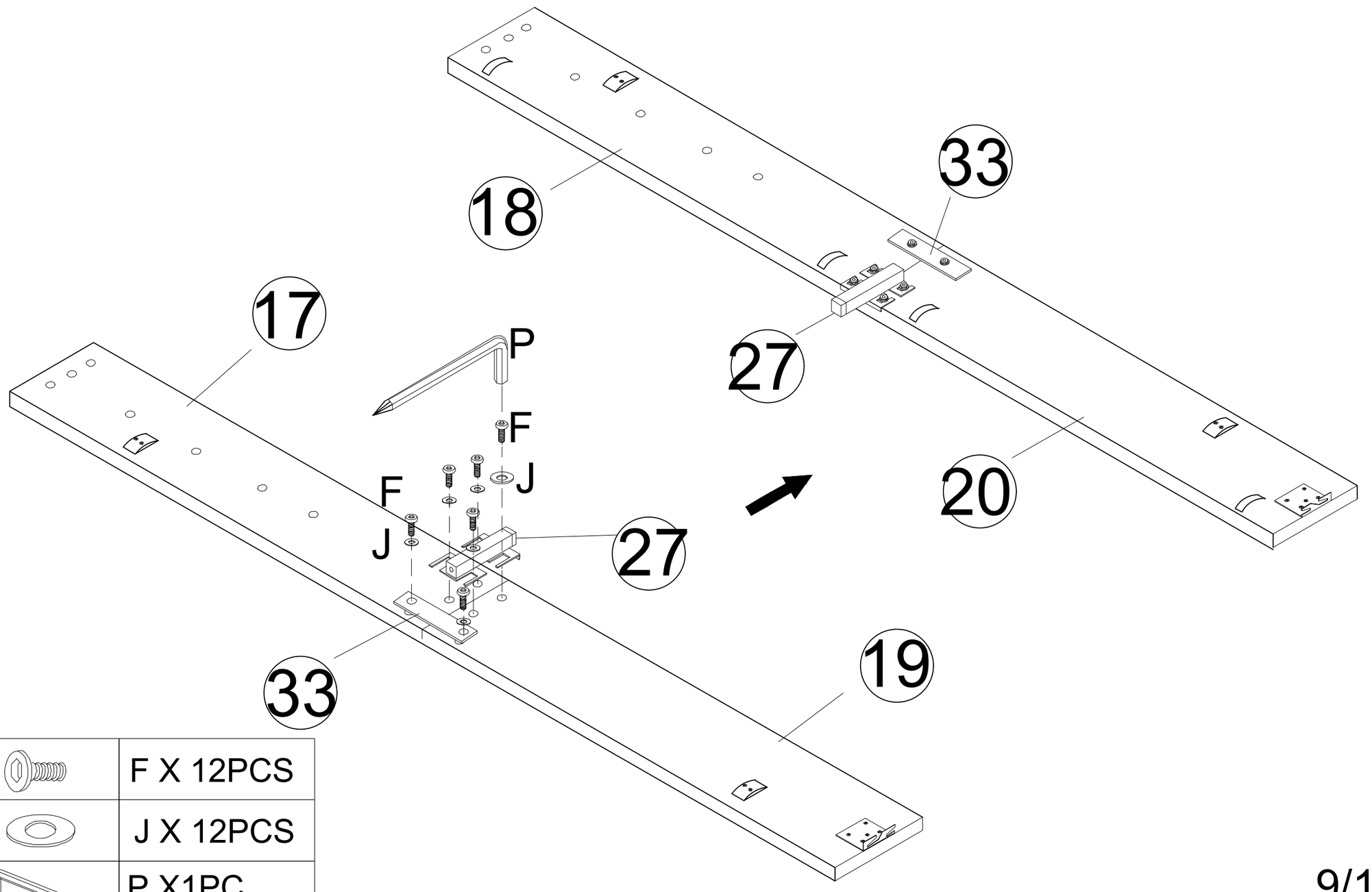

	F X 12PCS
	J X 12PCS
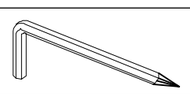	P X1PC

STEP 11:

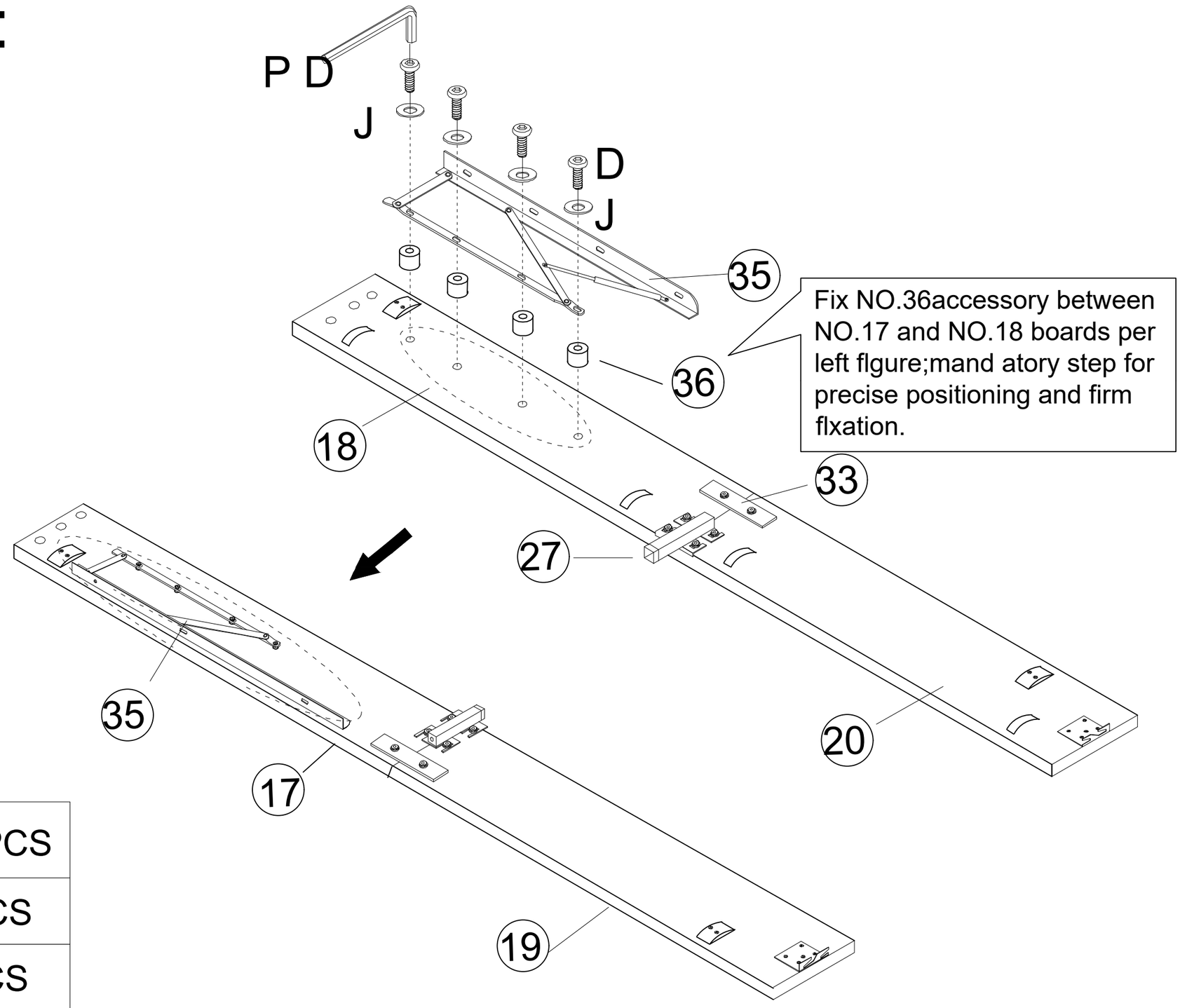

	36 X 8PCS
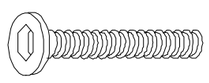	D X 8PCS
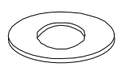	J X 8PCS
	P X1PC

STEP 12:

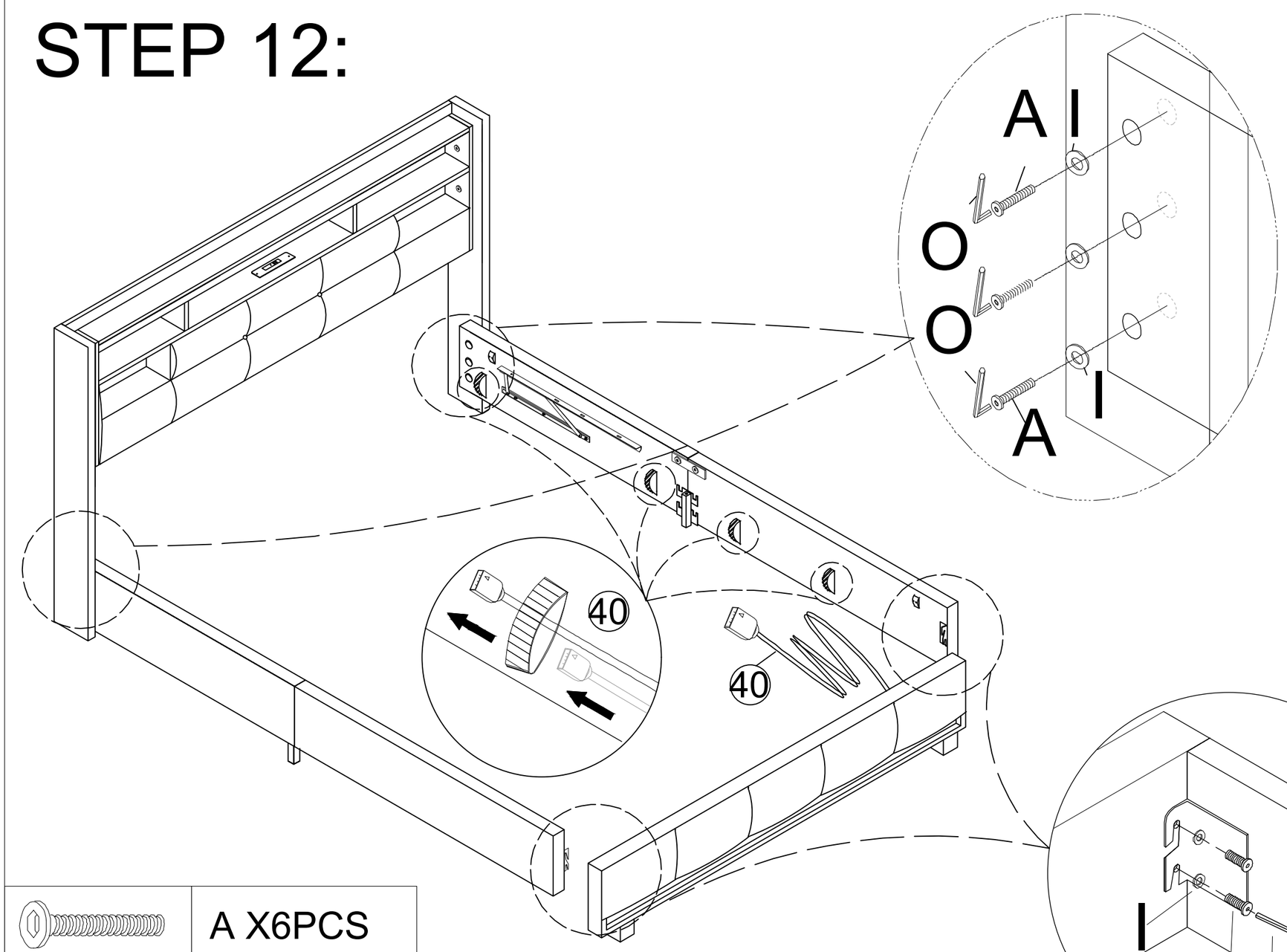

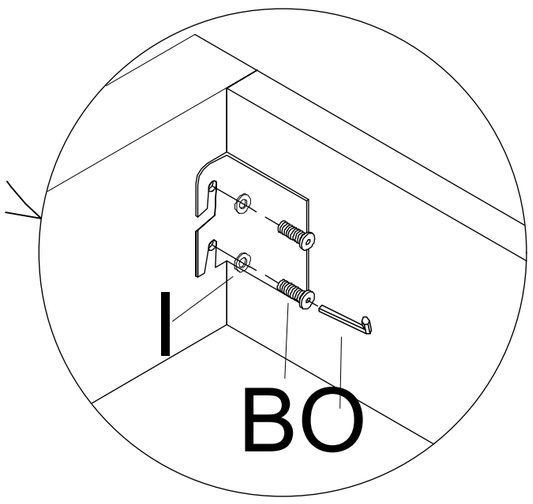

	A X6PCS
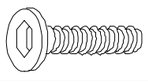	B X 4PCS
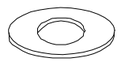	I X10PCS
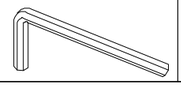	OX1PC

STEP 13:

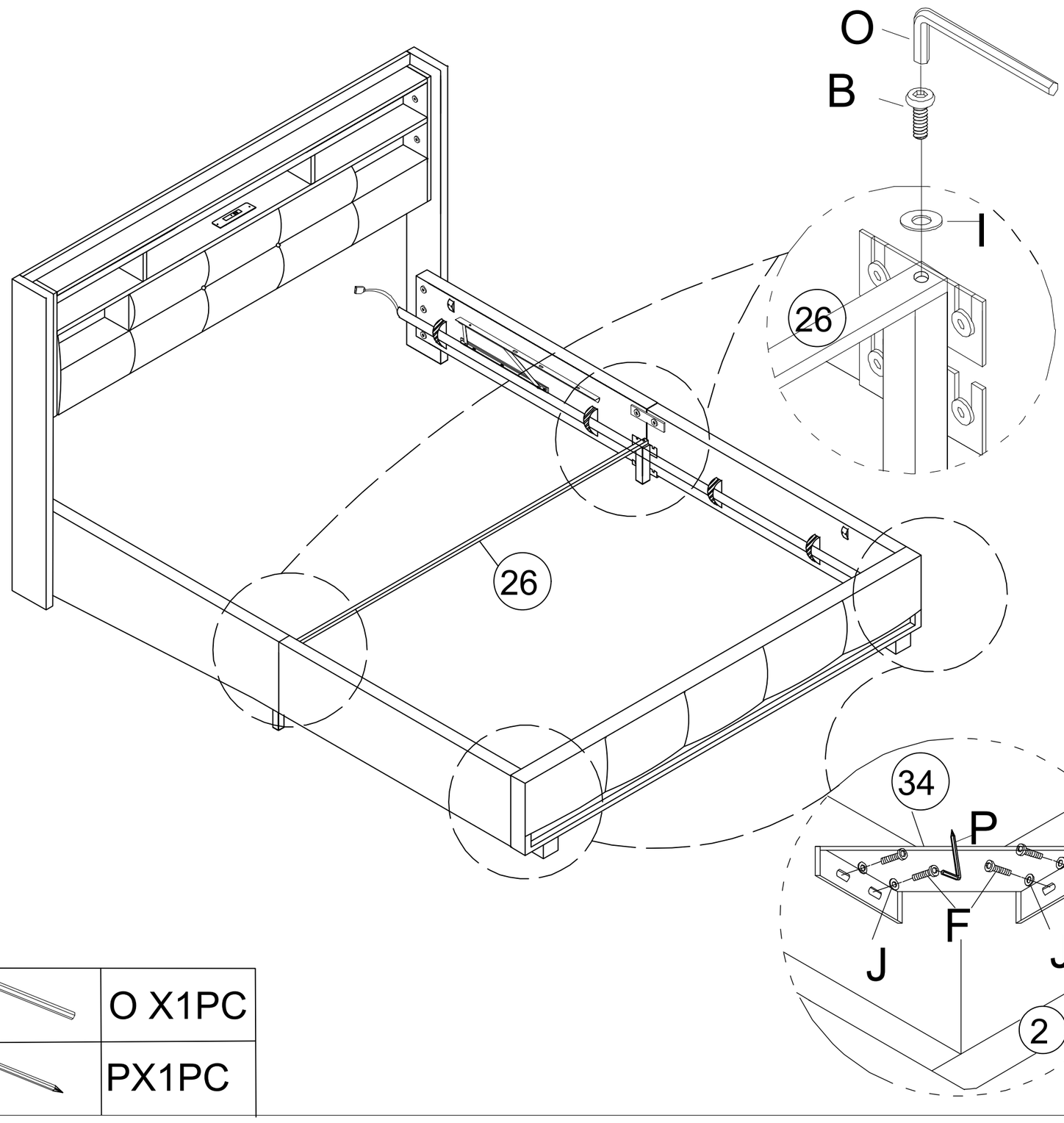

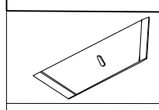	34 X 2PCS		
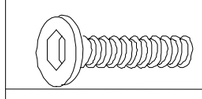	B X 2PCS		
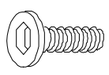	F X 8PCS		
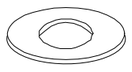	I X 2PCS		O X1PC
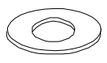	J X 8PCS		PX1PC

STEP 14:

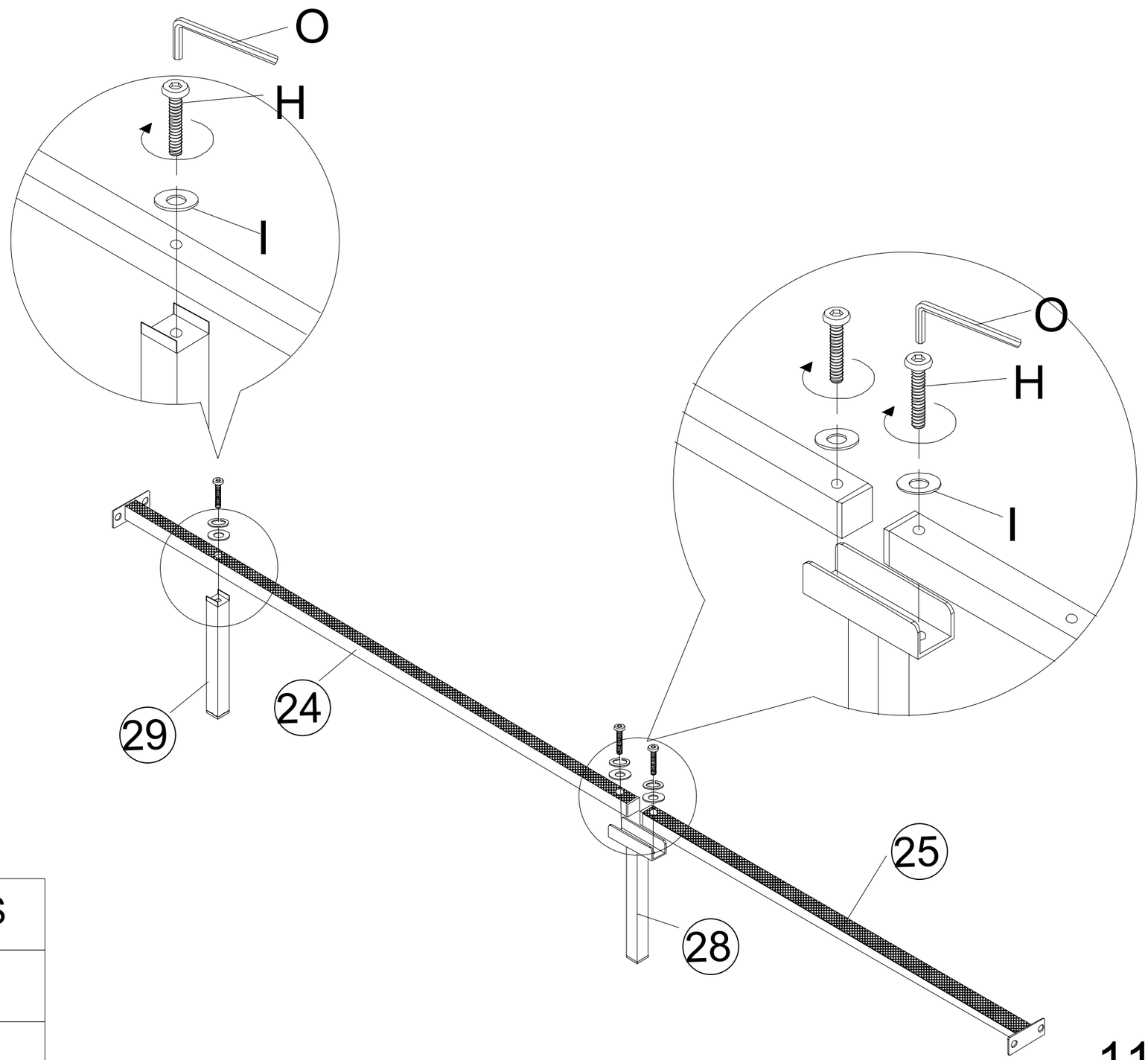

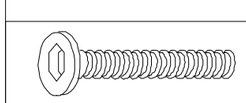	H X3PCS
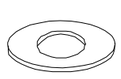	I X 3PCS
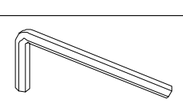	O X1PC

STEP 15:

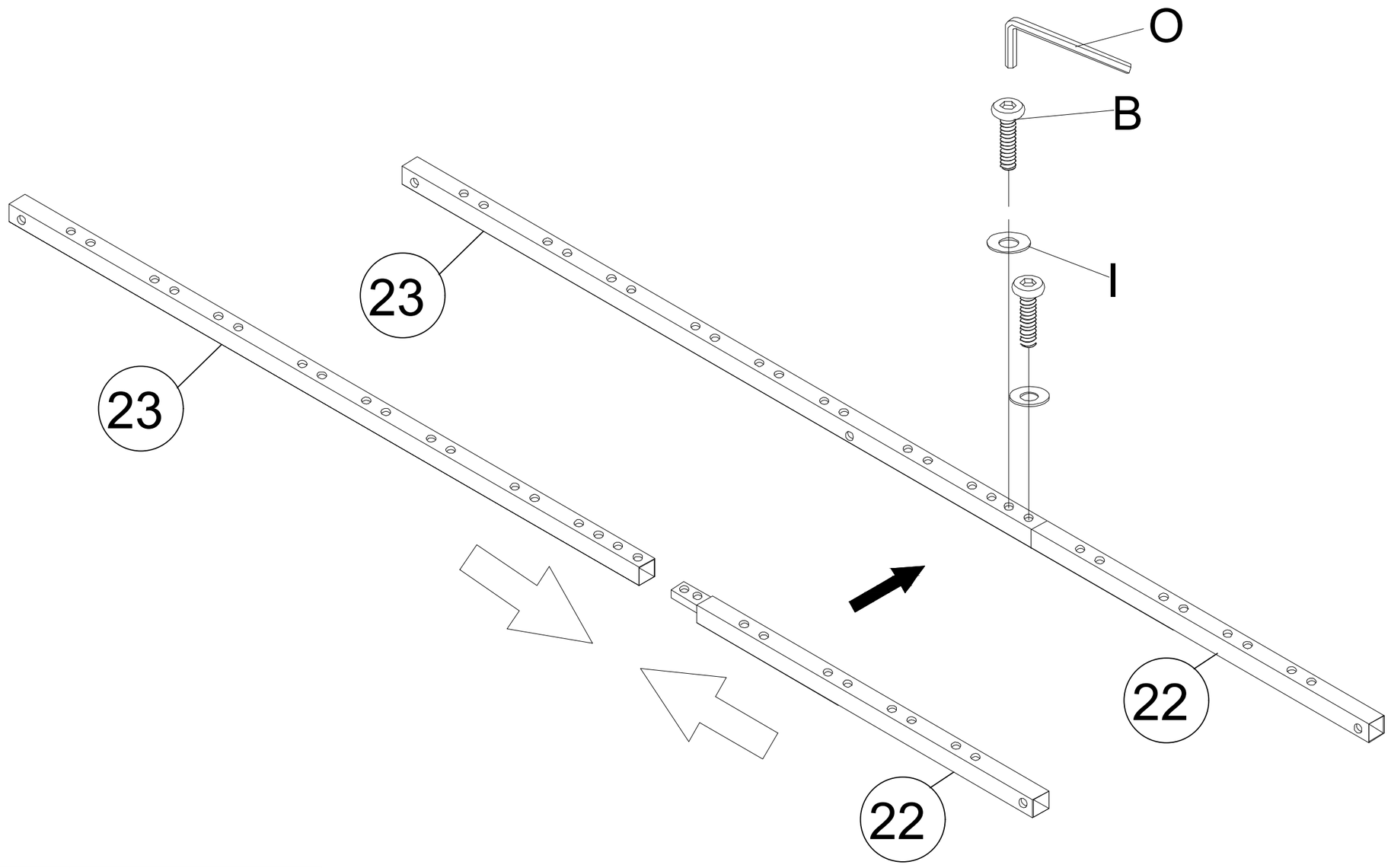

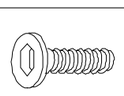	B X 4PCS
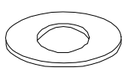	I X 4PCS
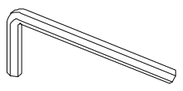	O X1PC

X 2

STEP 16:

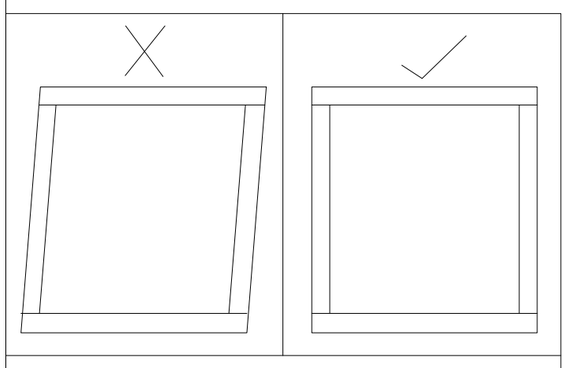

(DE)
Hinweis:Stelle Sie sicher,dass die Rahmenbaugruppen rechtwinklig sind.

(FR)
Remarque:Assurez-vous que l'assemblage du cadre est carré.

(EN)
Note: Make sure that the frame sub - assemblies are at right angle.

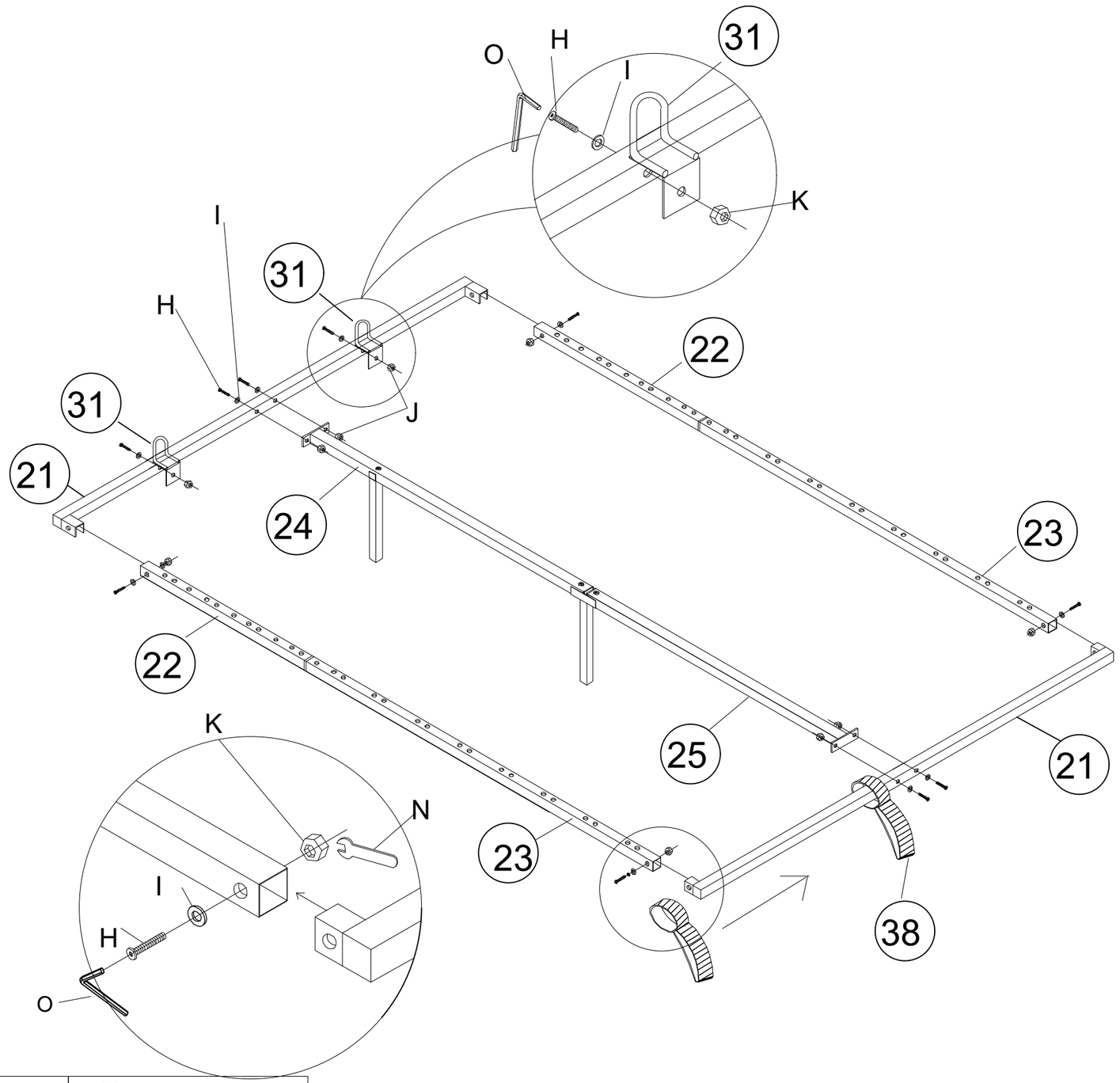

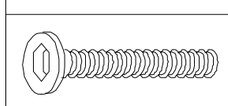	HX10PCS		
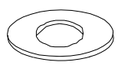	I X 10PCS		
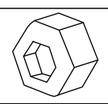	K X 10PCS		
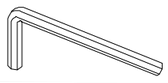	O X1PC		31 X2PCS
	N X1PC		38 X1PC

STEP 17:

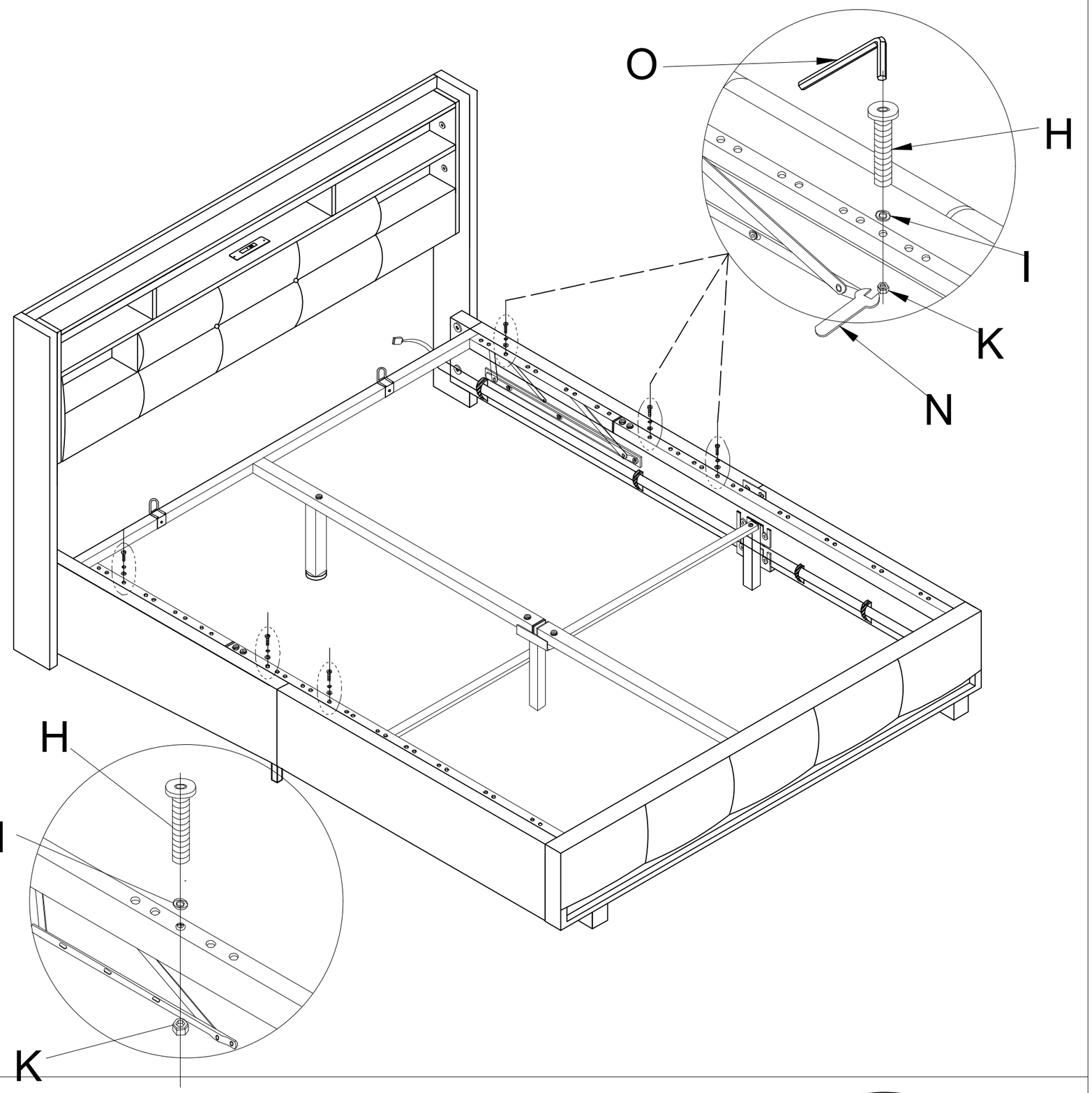

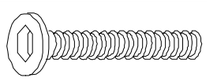	HX6PCS
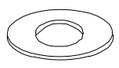	I X 6PCS
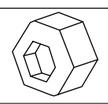	KX 6PCS
	O X1PC
	N X1PC

STEP 18:

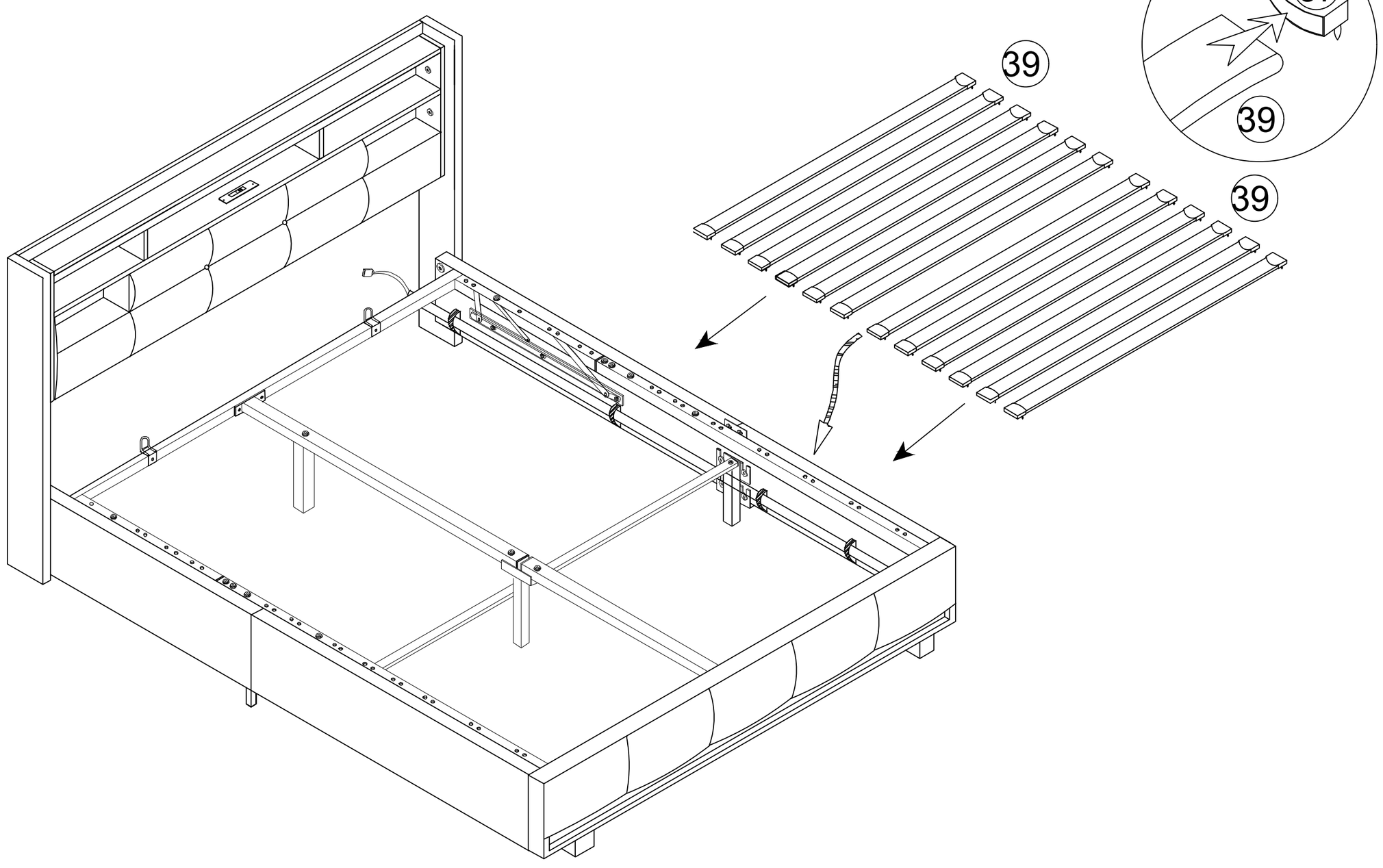

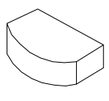	37 X24PCS

STEP 19:

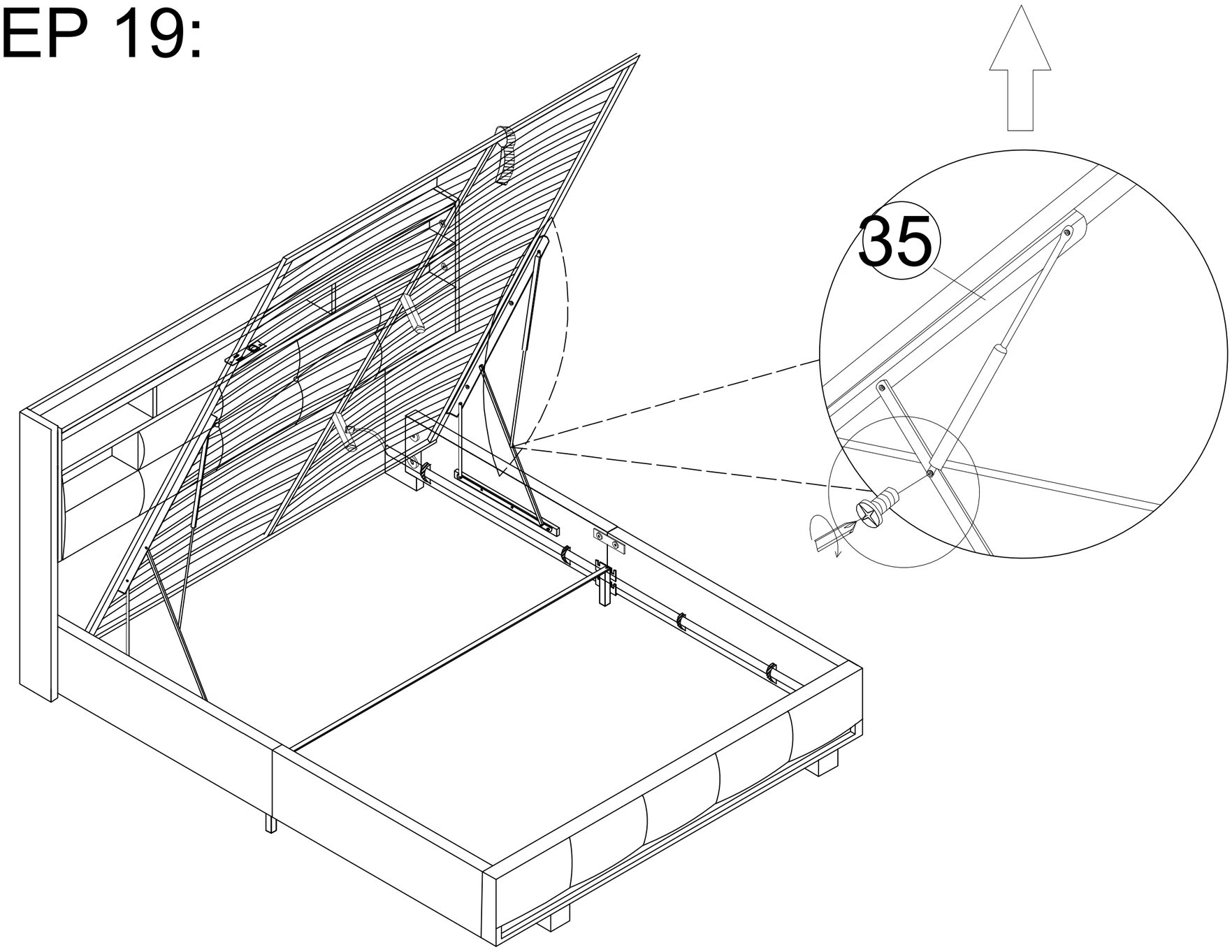

STEP 20:

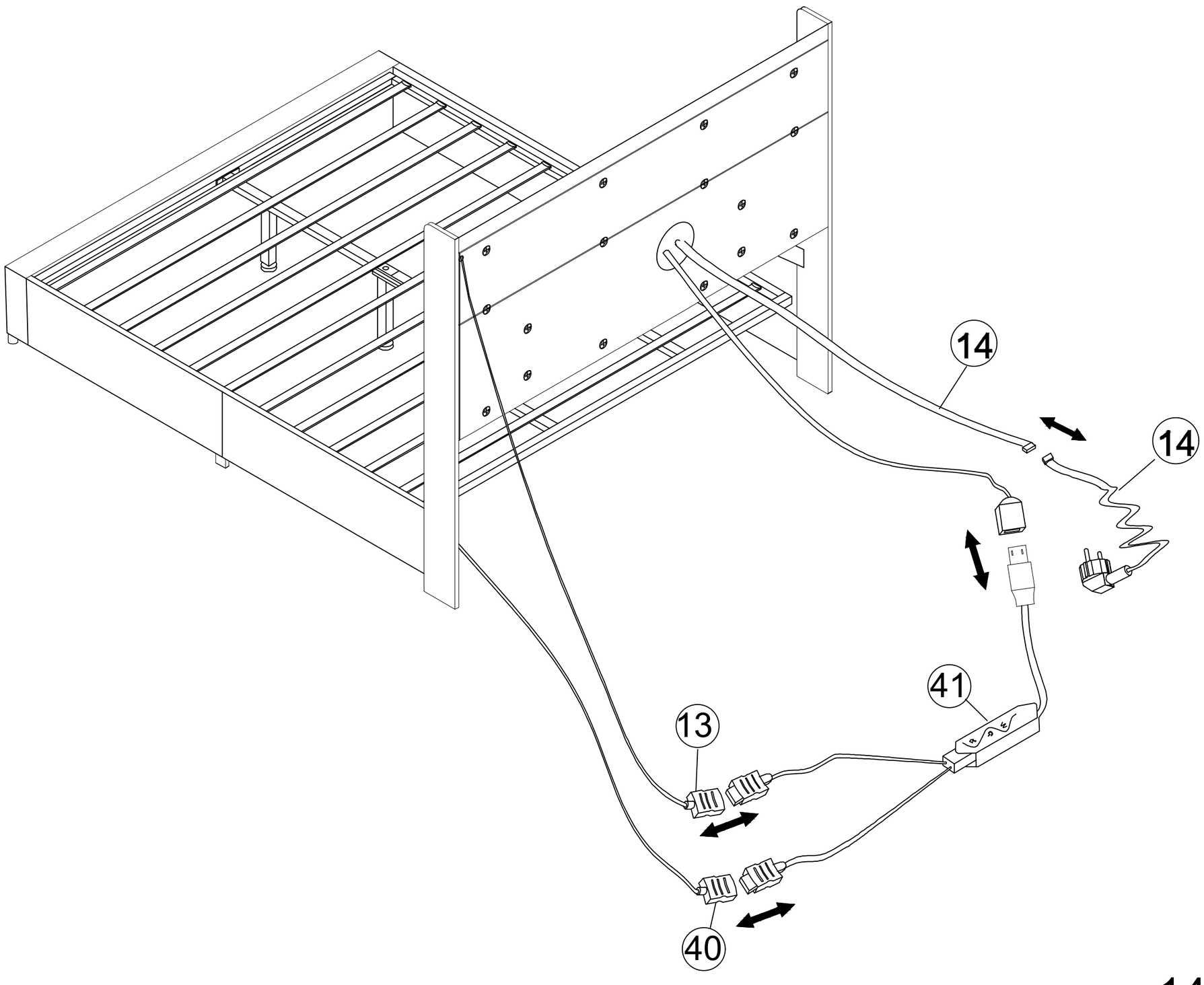

STEP 21:

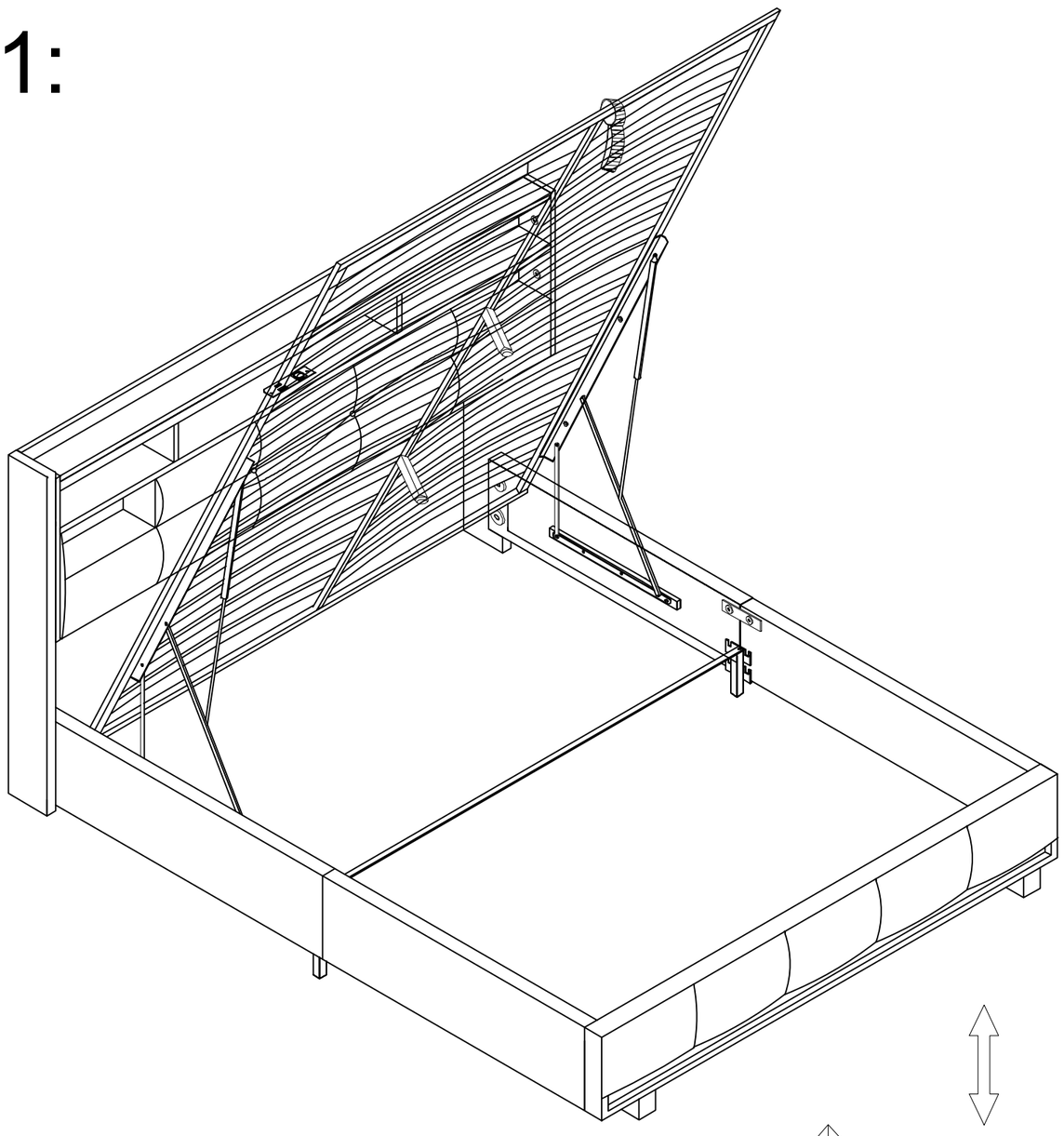

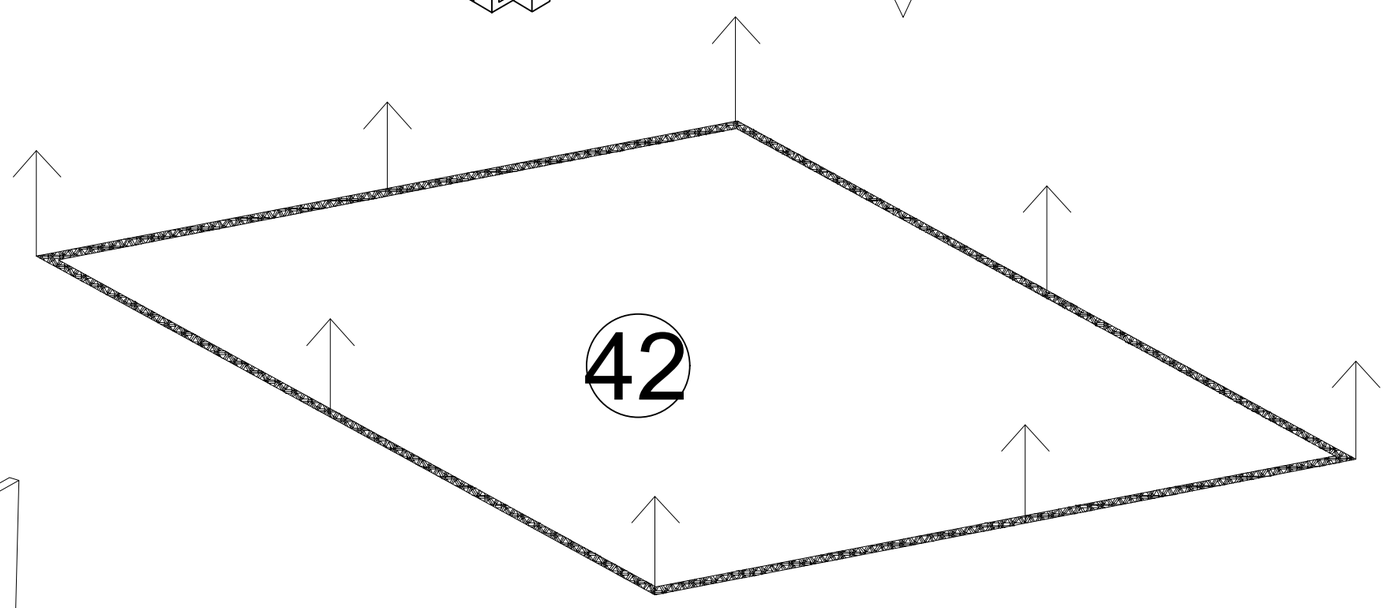

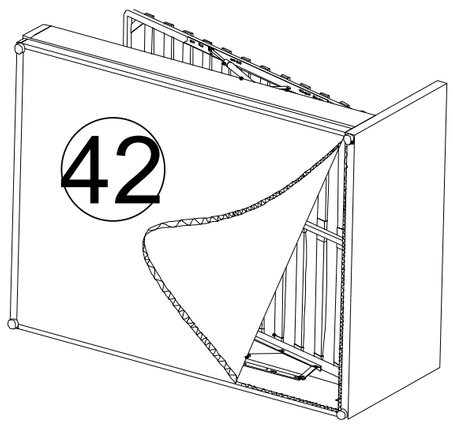

When lowering the bed frame, spread your hands apart and press down vertically.

