SKU: HK-ST-017-N

User Manual

Z5-20260316

Before Assembly

Please read the USER MANUAL thoroughly for quick assembly, and check according to Accessories.



Team Installation:

For larger product, we recommend that you install the product together with other people



Laying Protection:

To protect the product and your flooring during installation, please lay protection before installation



No Electric Drill:

For longer use, please use the installation tools supplied with the product.



Installation question:

You can find installation video instructions on YouTube by searching our brand.

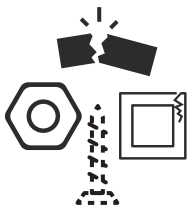

Missing Parts or Broken:

Please feel free to contact us via Amazon Orders or Customer Support Email. We promise to ship the missing or replacement parts to you free of charge.

Disassembly Diagram

For easy installation
Scan the QRcode to access the installation guide video.

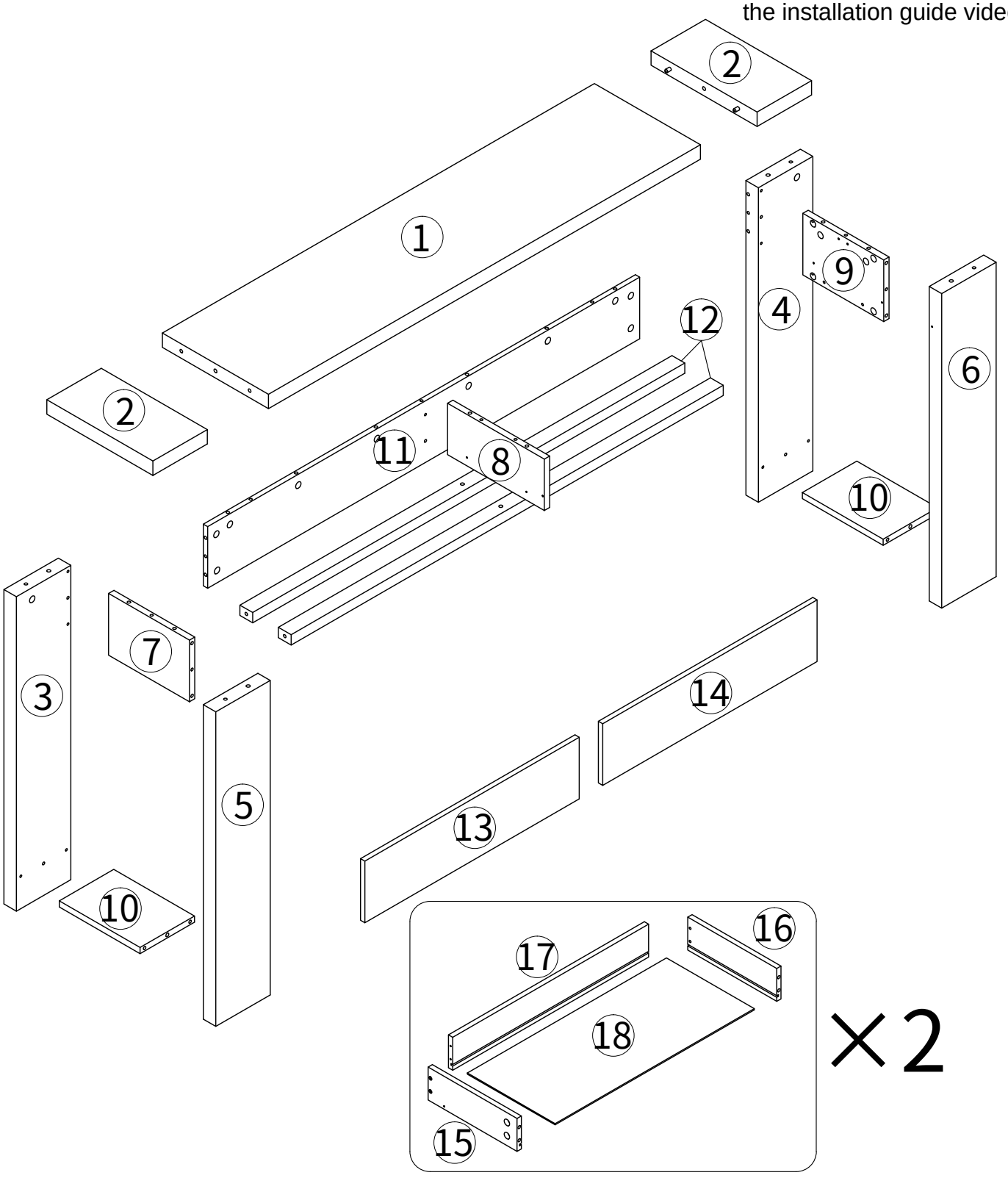

① ×1

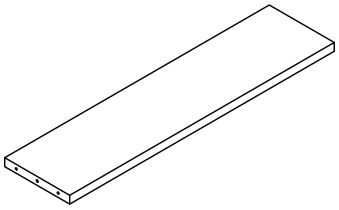

② ×2

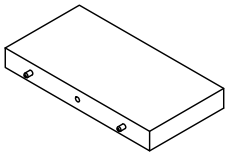

③ ×1

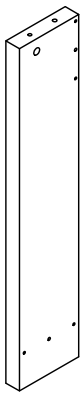

④ ×1

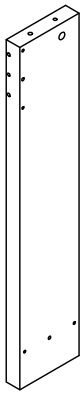

⑤ ×1

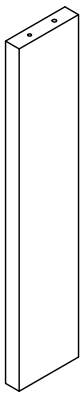

⑥ ×1

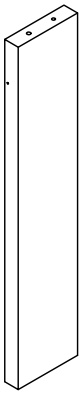

⑦ ×1

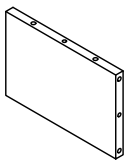

⑧ ×1

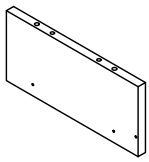

⑨ ×1

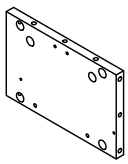

⑩ ×2

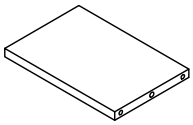

⑪ ×1

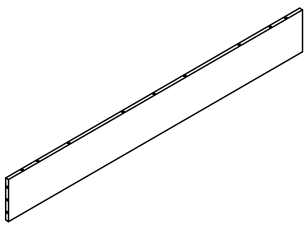

⑫ ×2

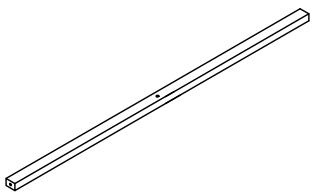

⑬ ×1

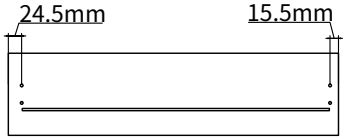

⑭ ×1

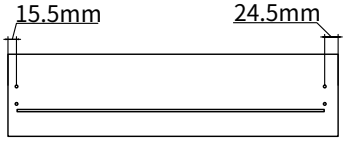

⑮ ×2

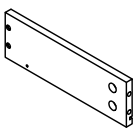

⑯ ×2

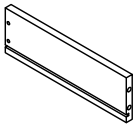

⑰ ×2 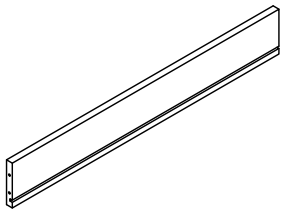	⑱ ×2 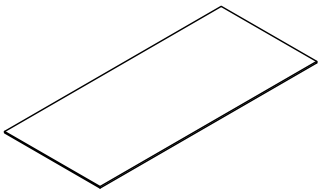		

A
×50

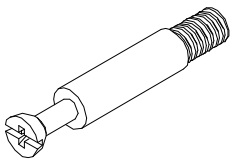

M6×35mm

B
×50

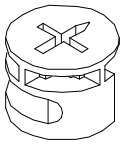

Ø15×10mm

C
×23



Ø6×30mm

D
×2

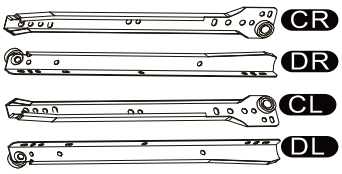

250mm

E
×24



Ø4×10mm

F
×2



Ø5×50mm

G
×8



Ø4×14mm

H
×2

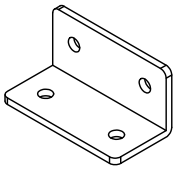

40×20×20×2mm

J
×10

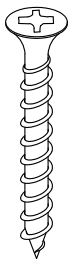

Ø4×35mm

K
×8

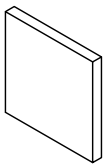

30×30×3mm

L
×2

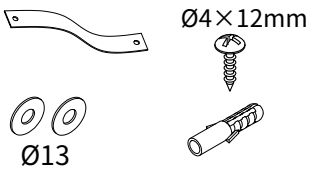

Ø6×30mm

M
×12

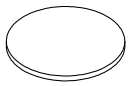

Ø20mm

N
×1



Assembly Instructions

Step1:

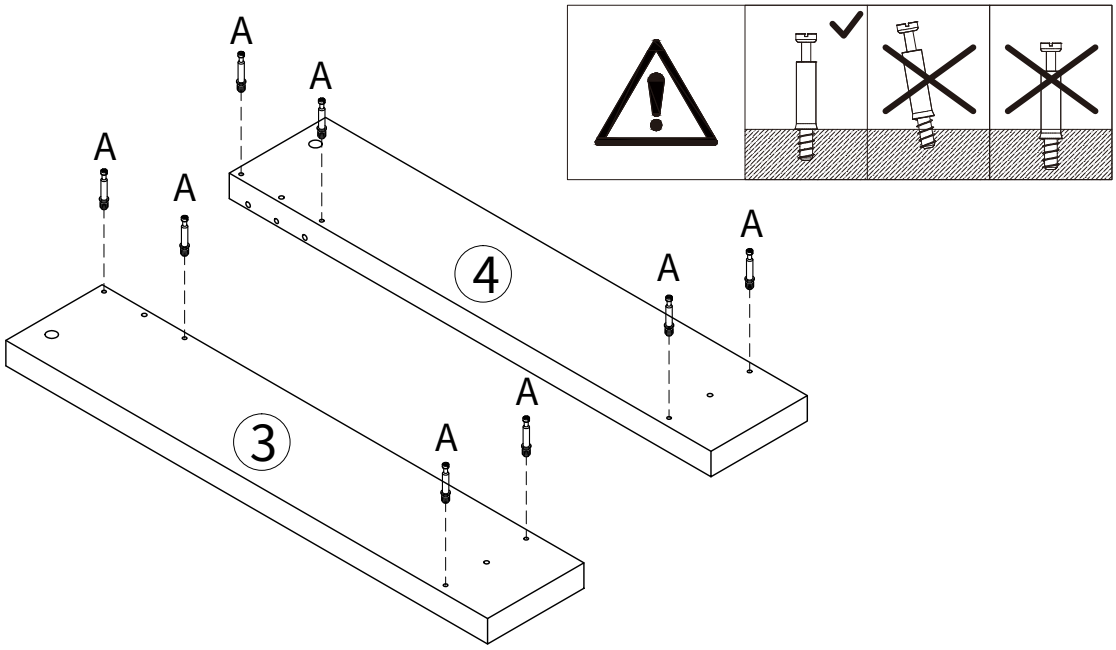

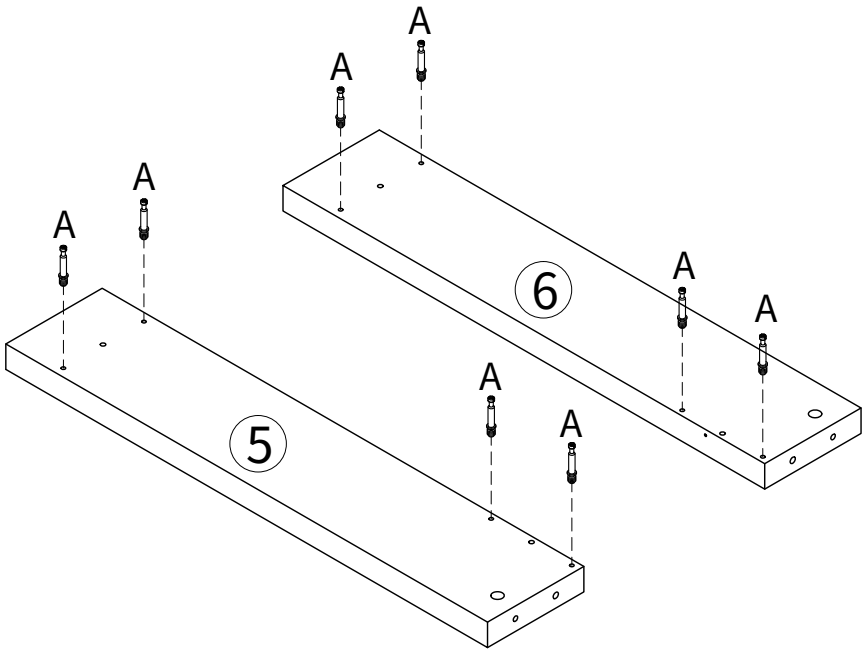

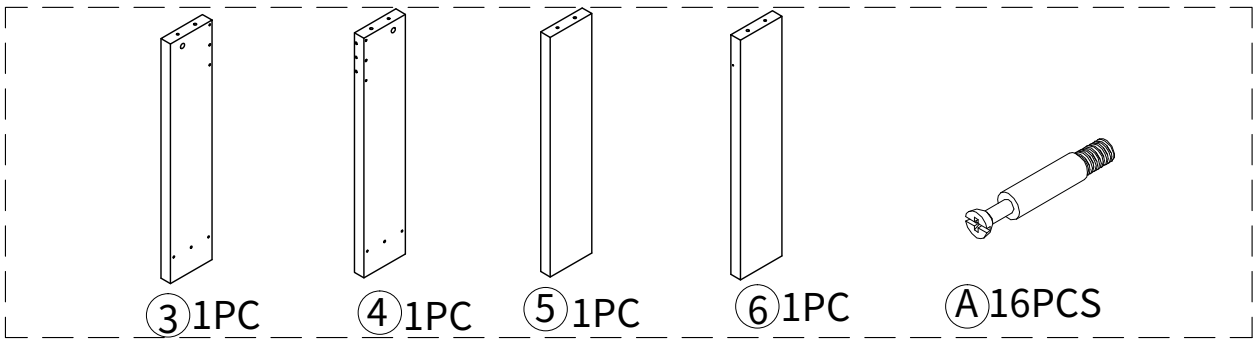

Assembly Instructions

Step2:

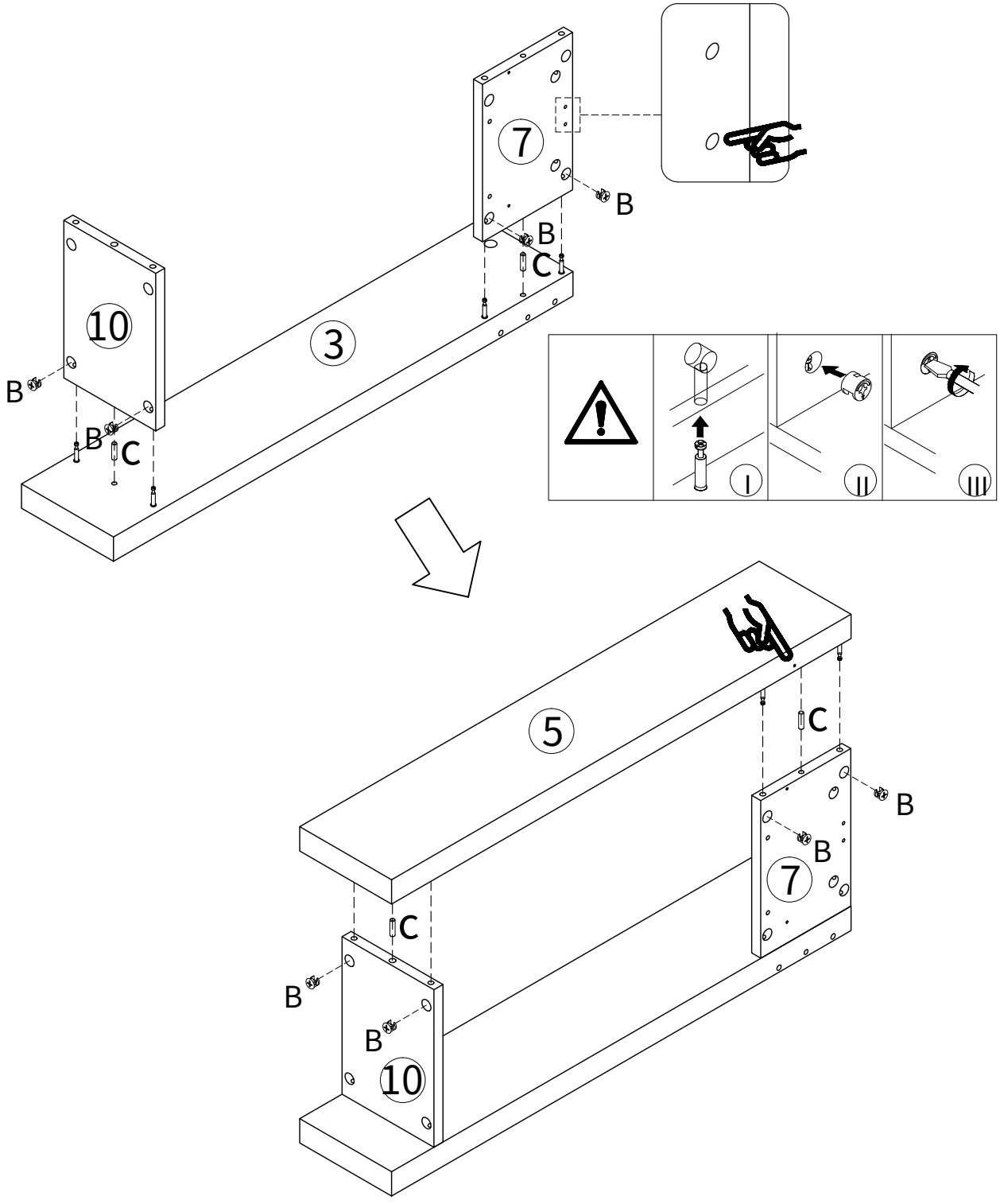

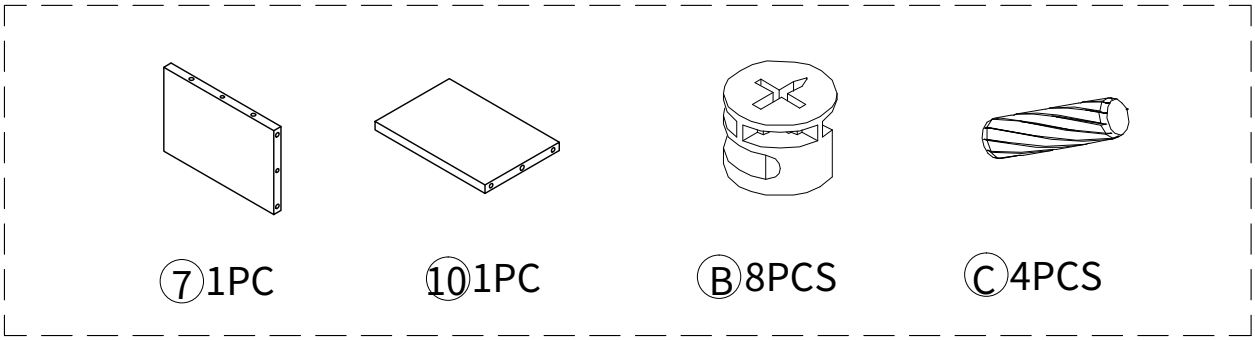

Assembly Instructions

Step3：

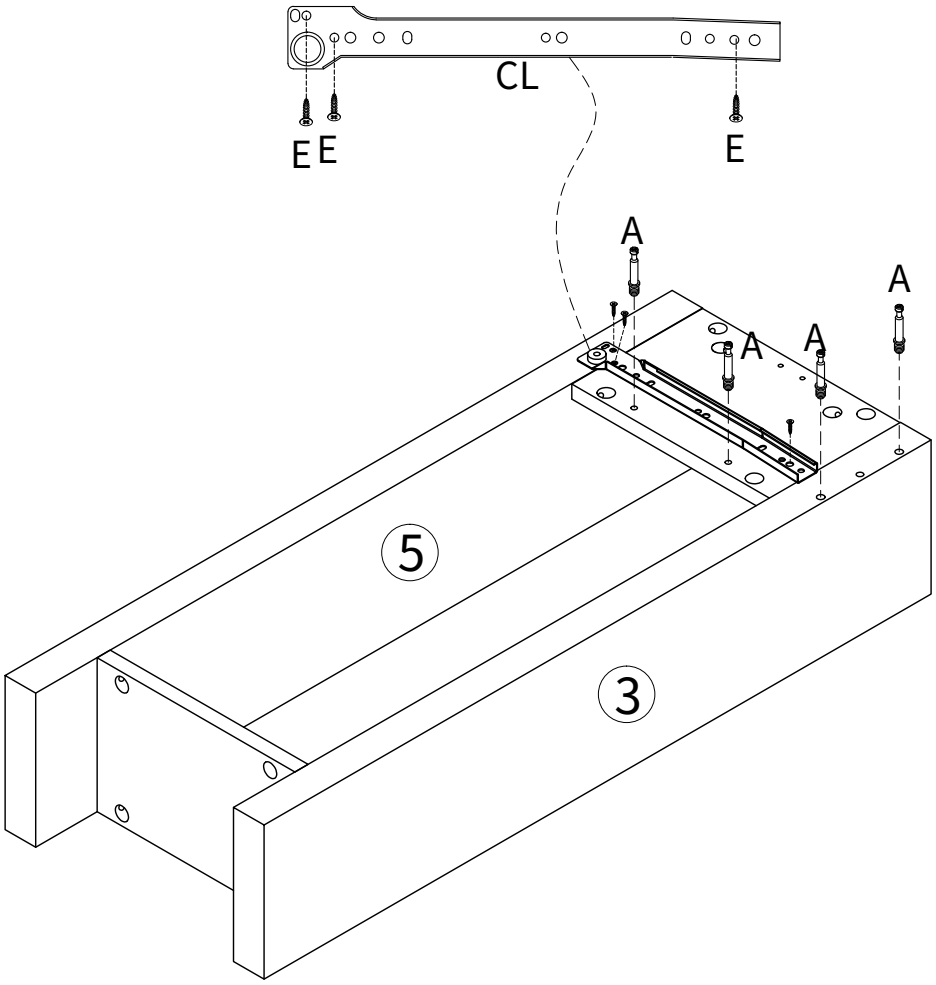

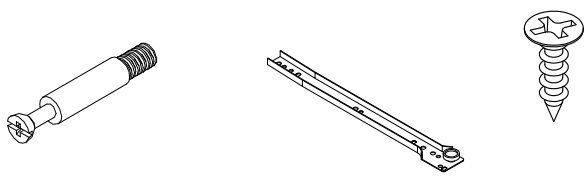

Ⓐ4PCS　　CL1PC　　Ⓔ3PCS

Assembly Instructions

Step4:

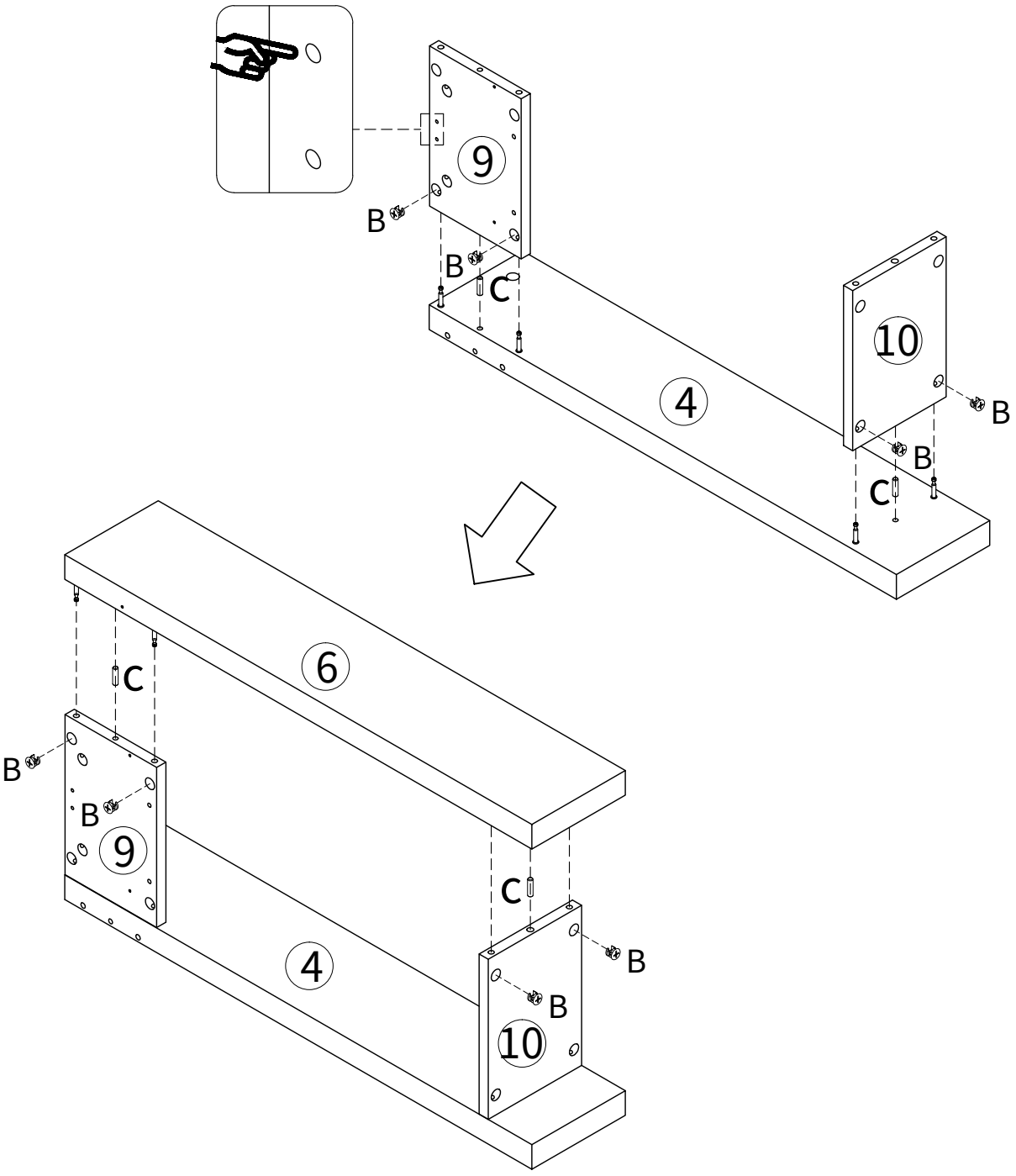

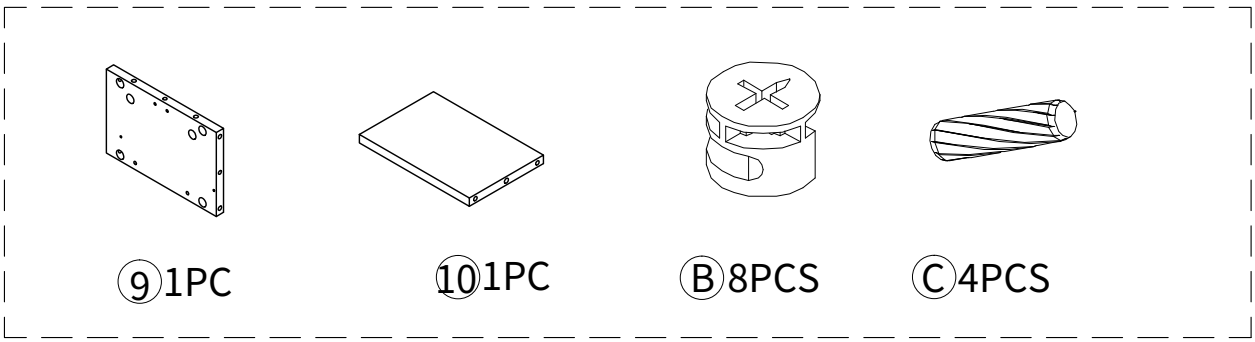

Assembly Instructions

Step5:

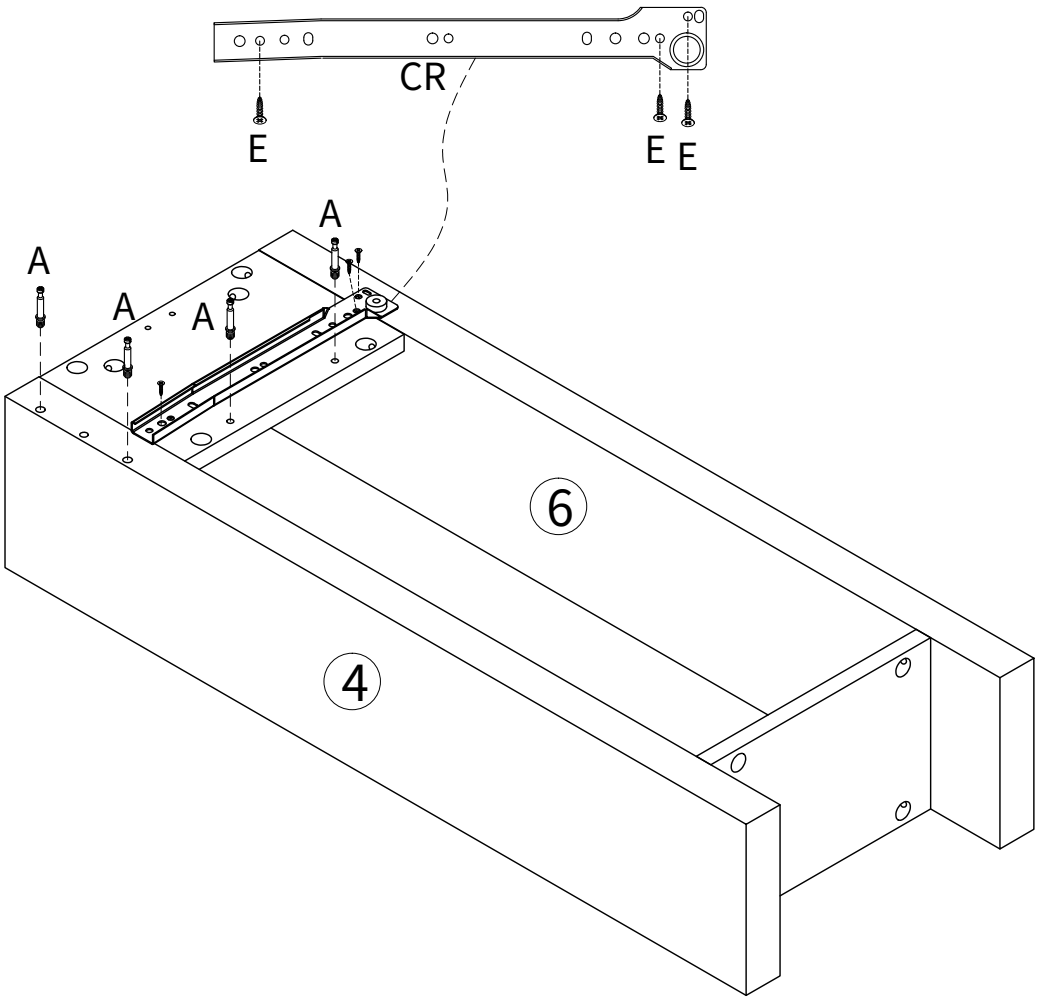

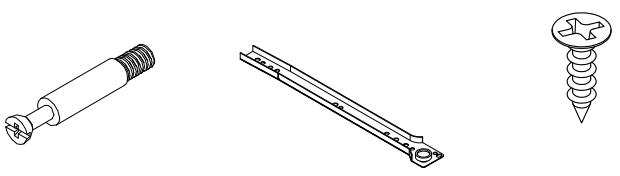

A 4PCS　　CR 1PC　　E 3PCS

Assembly Instructions

Step6:

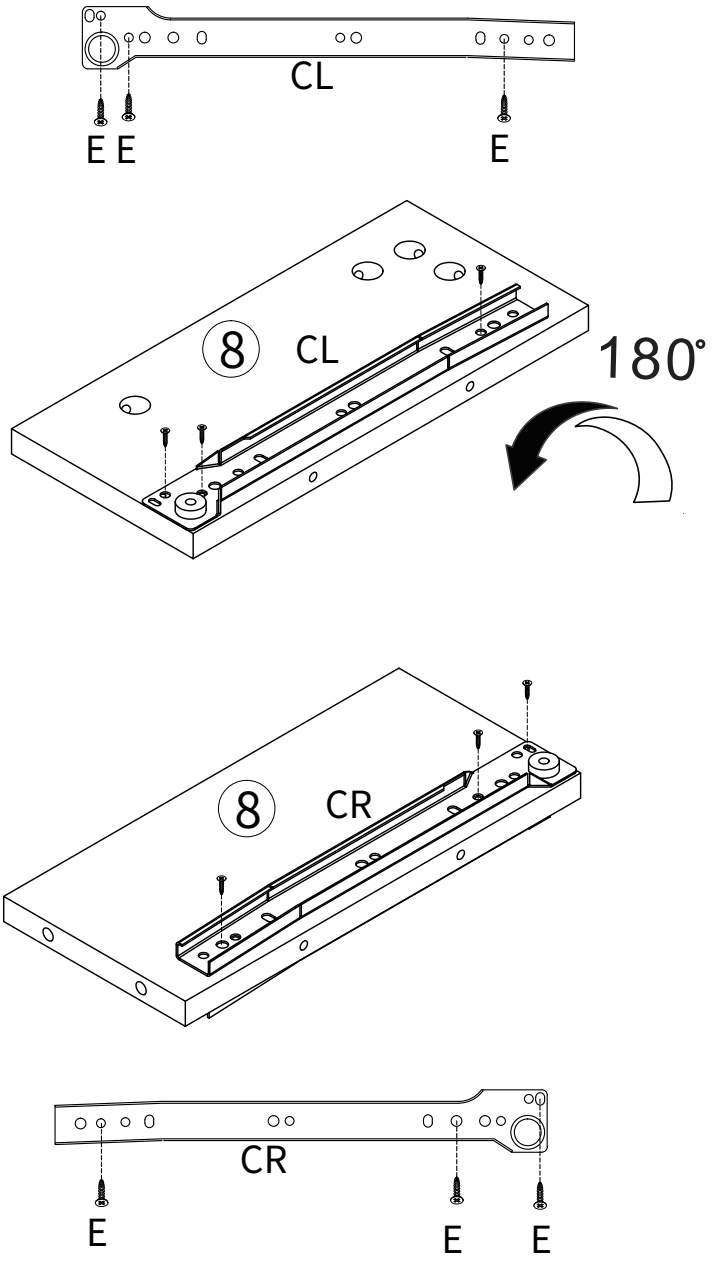

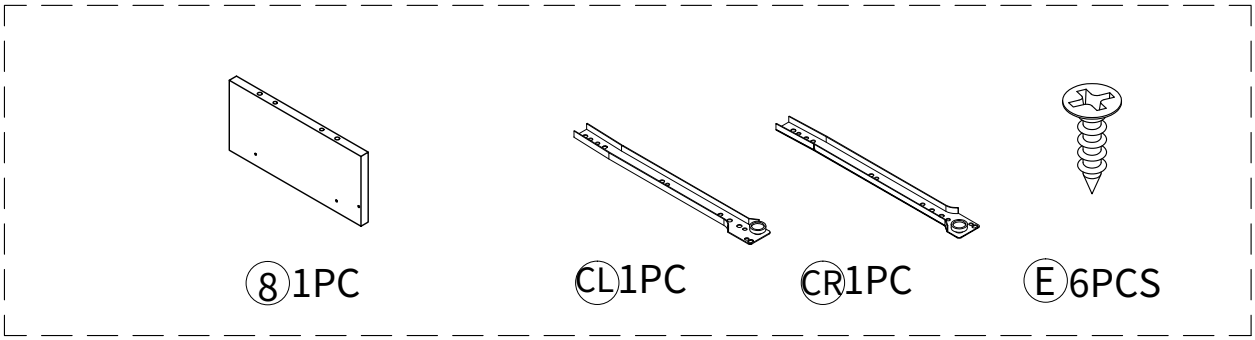

Assembly Instructions

Step7:

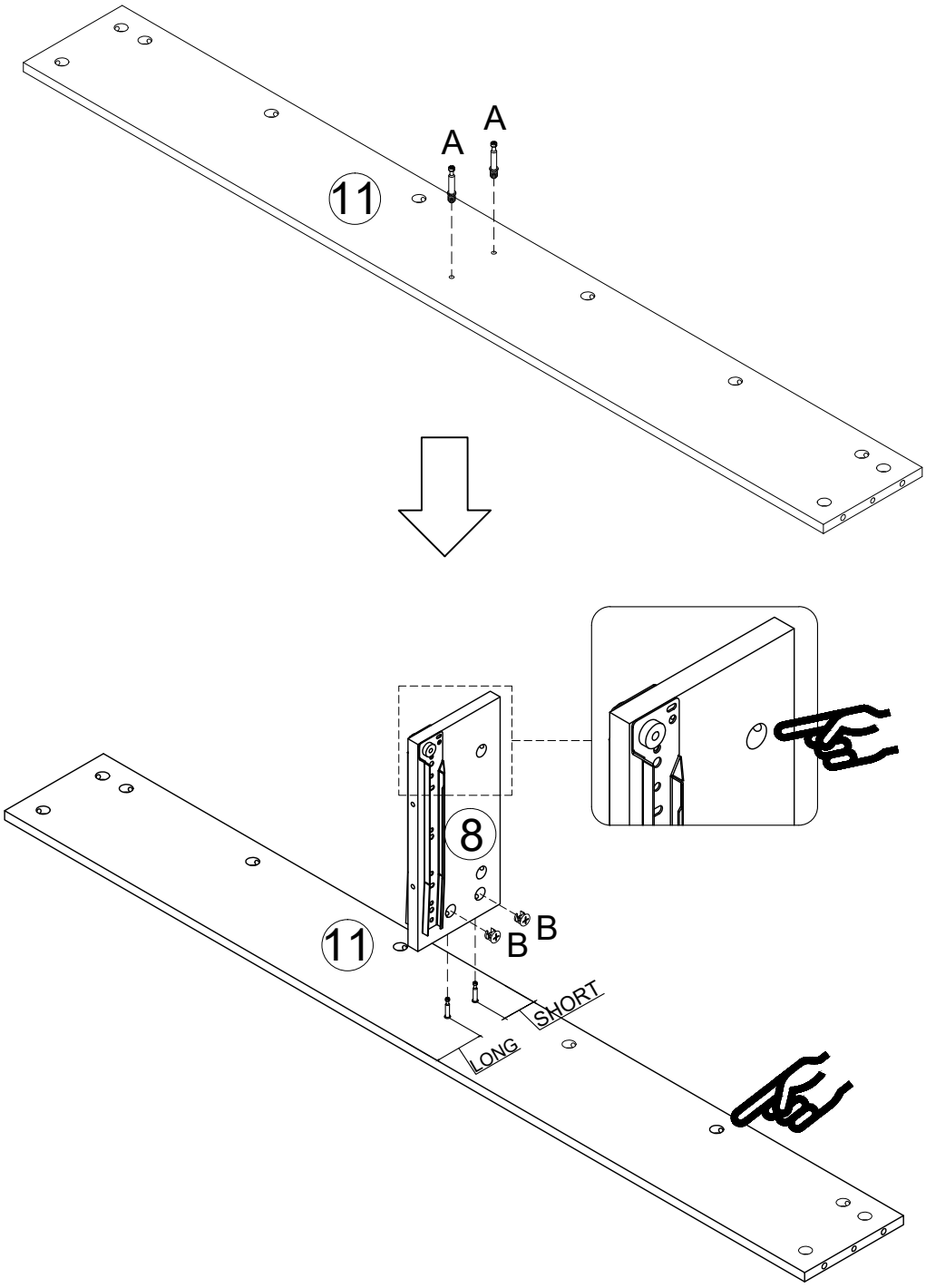

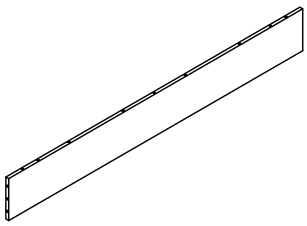

11 1PC

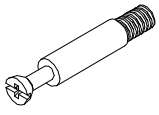

A 2PCS

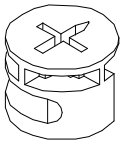

B 2PCS

Assembly Instructions

Step8:

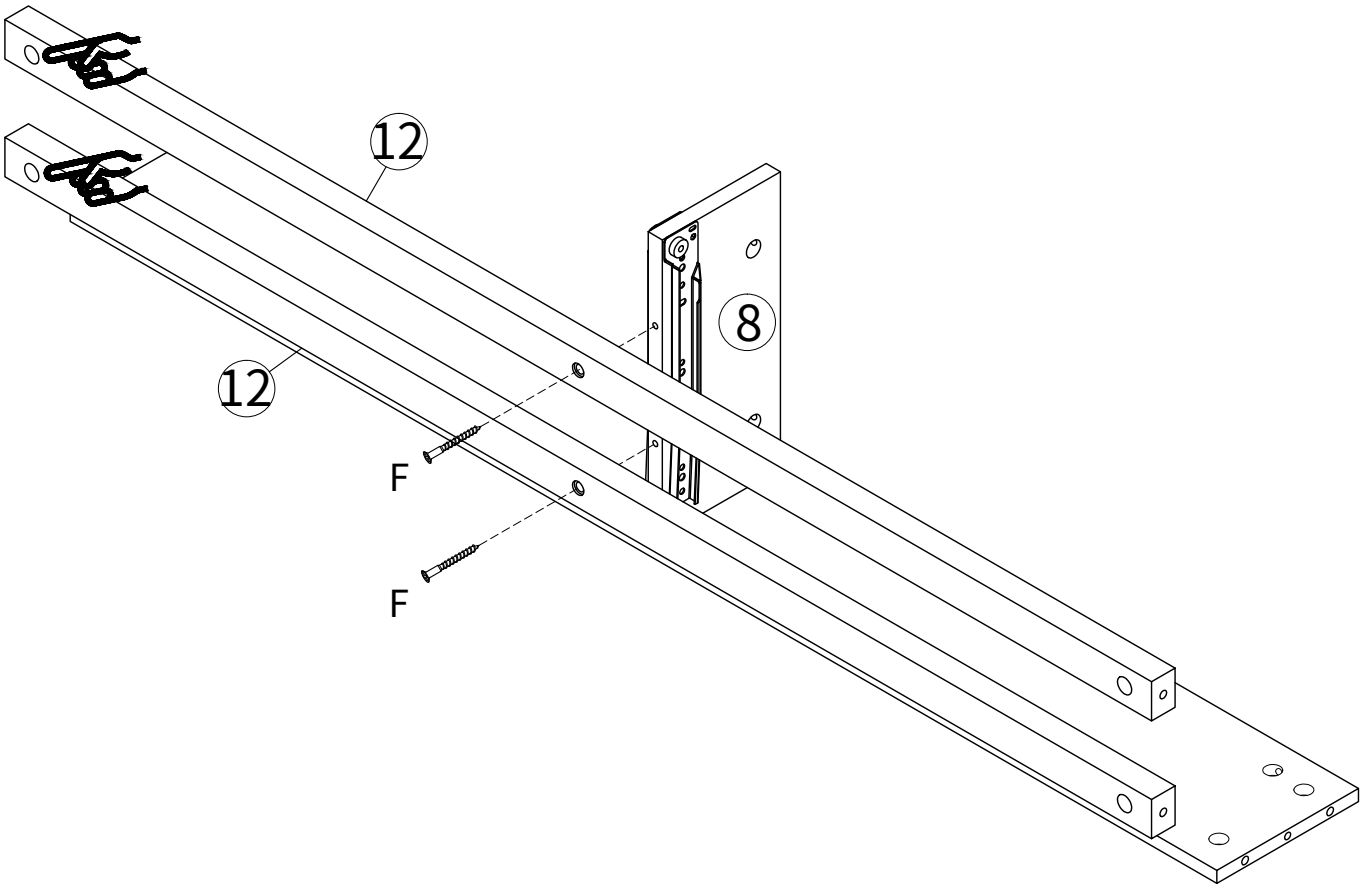

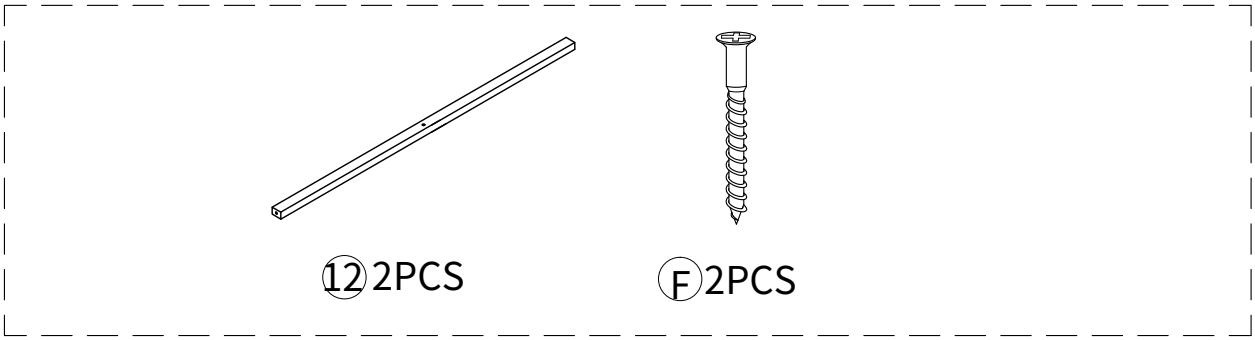

Assembly Instructions

Step9:

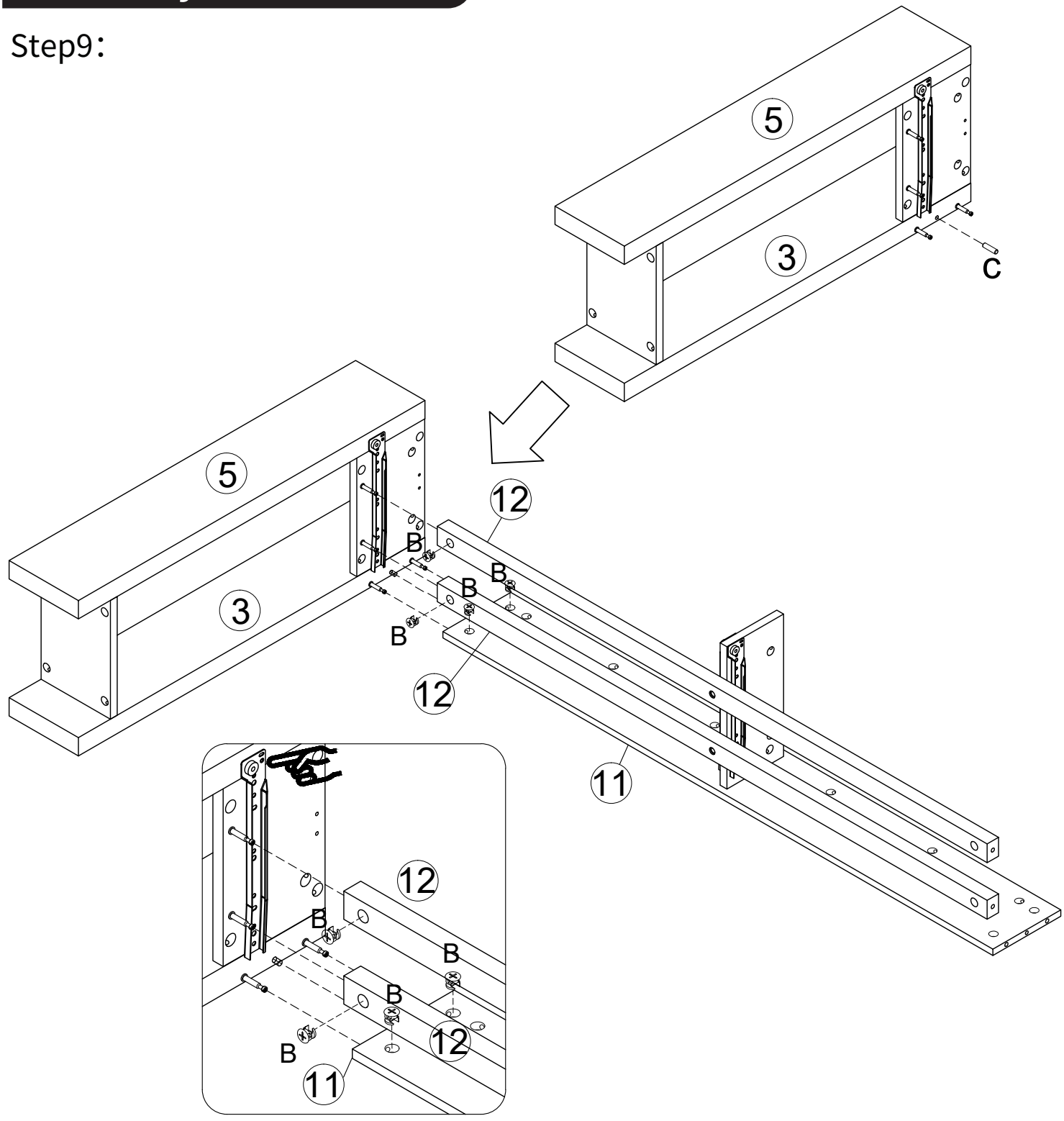

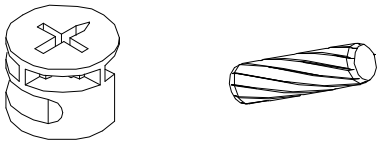

Ⓑ4PCS Ⓒ1PC

Assembly Instructions

Step10:

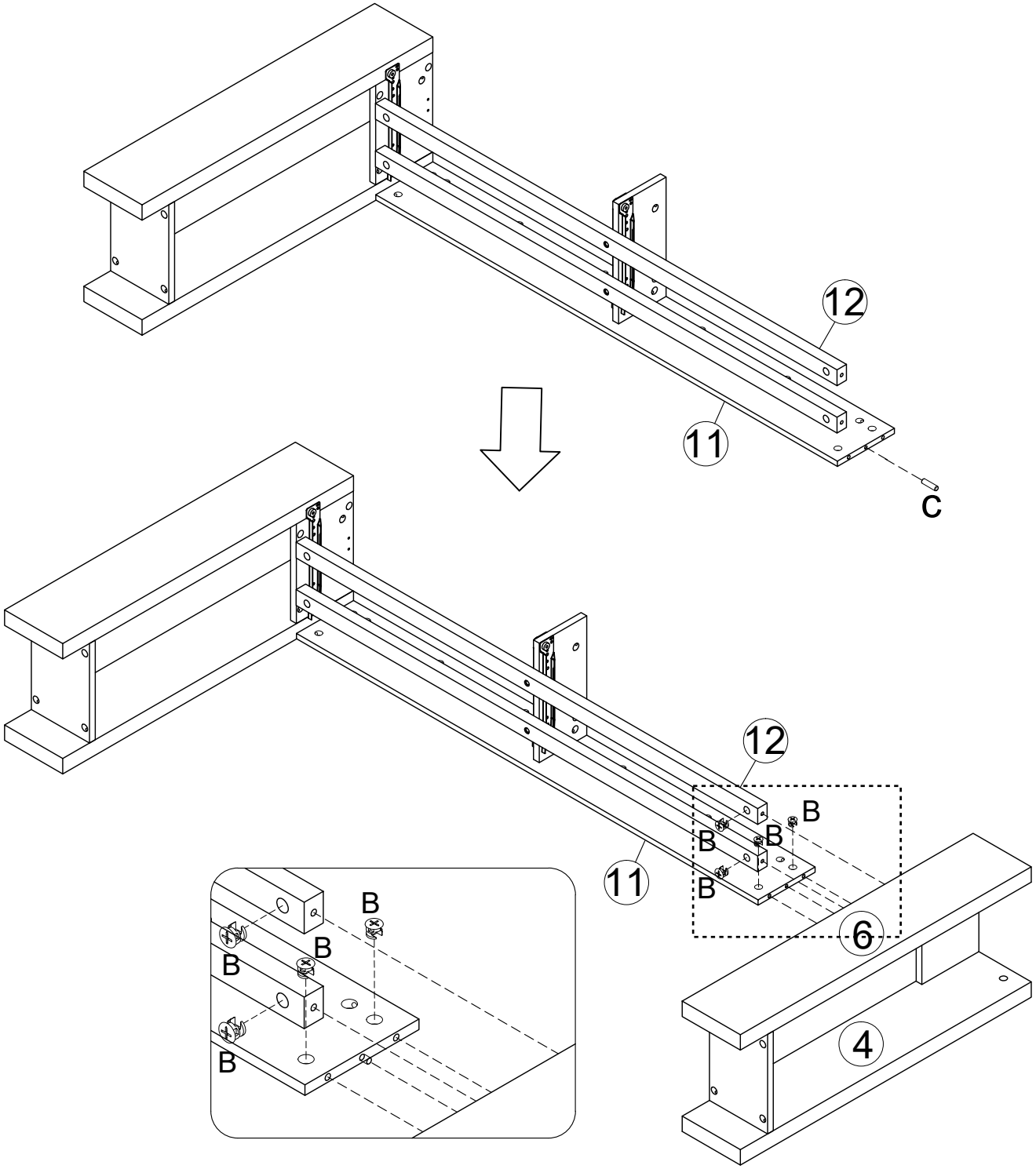

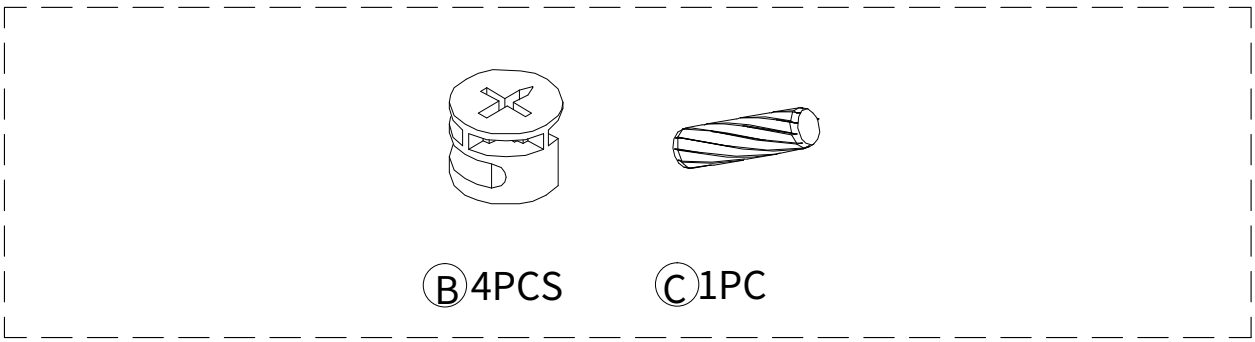

Assembly Instructions

Step11：

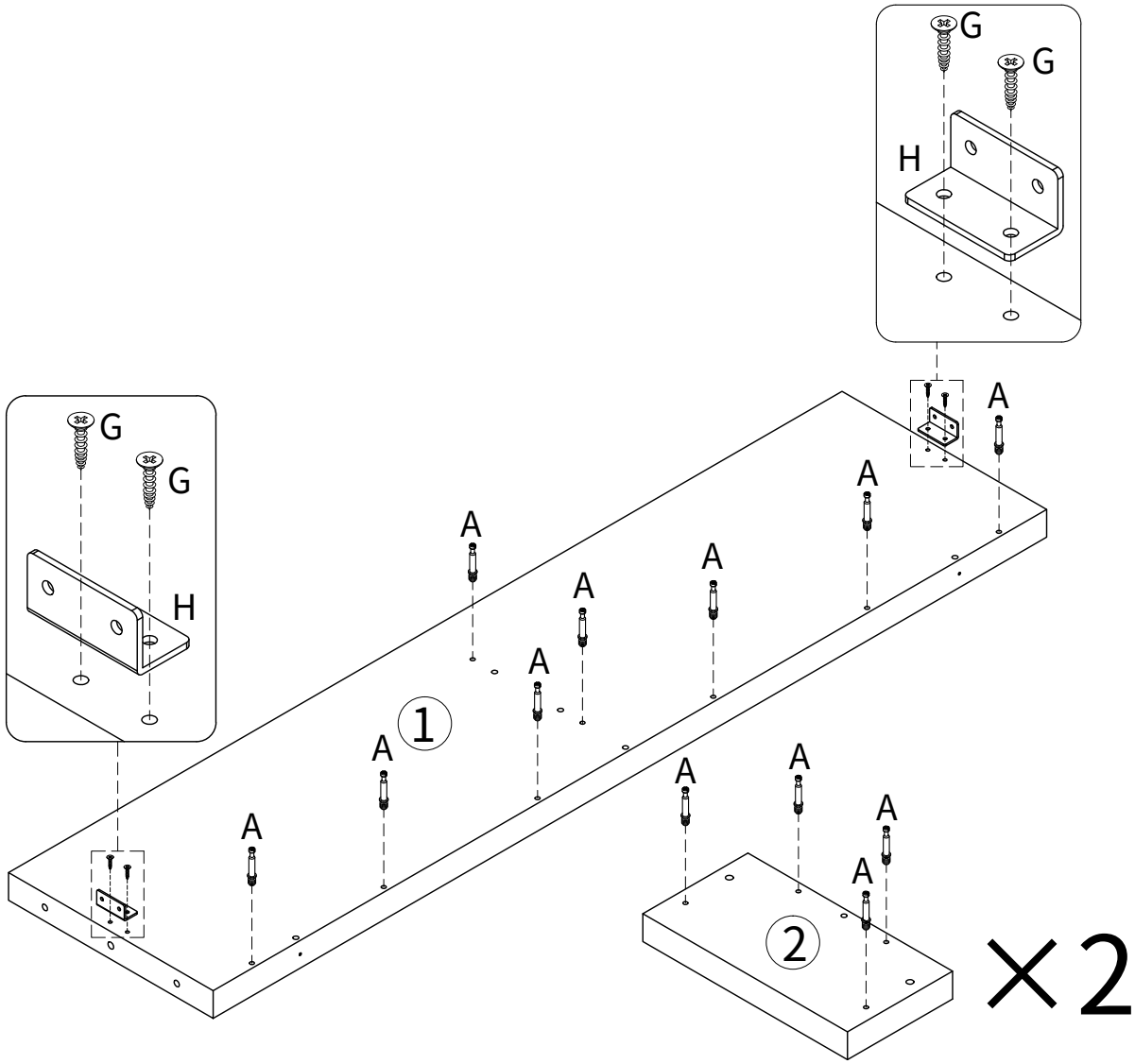

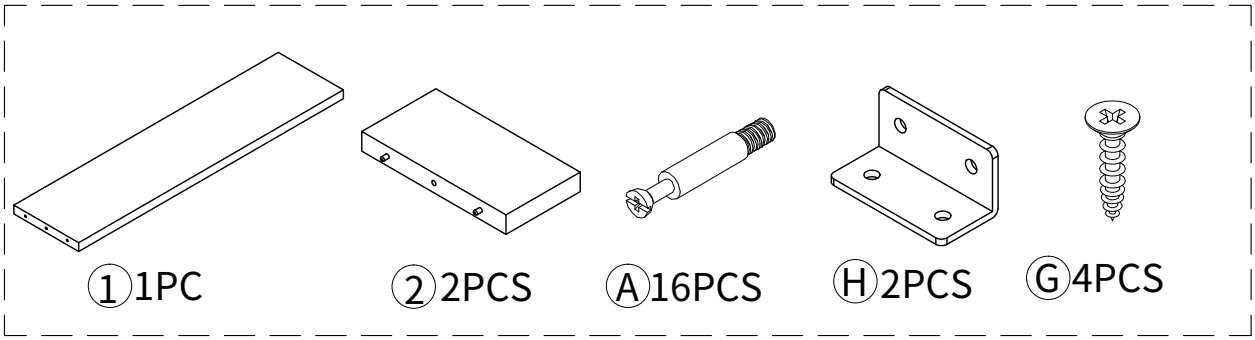

Assembly Instructions

Step12：

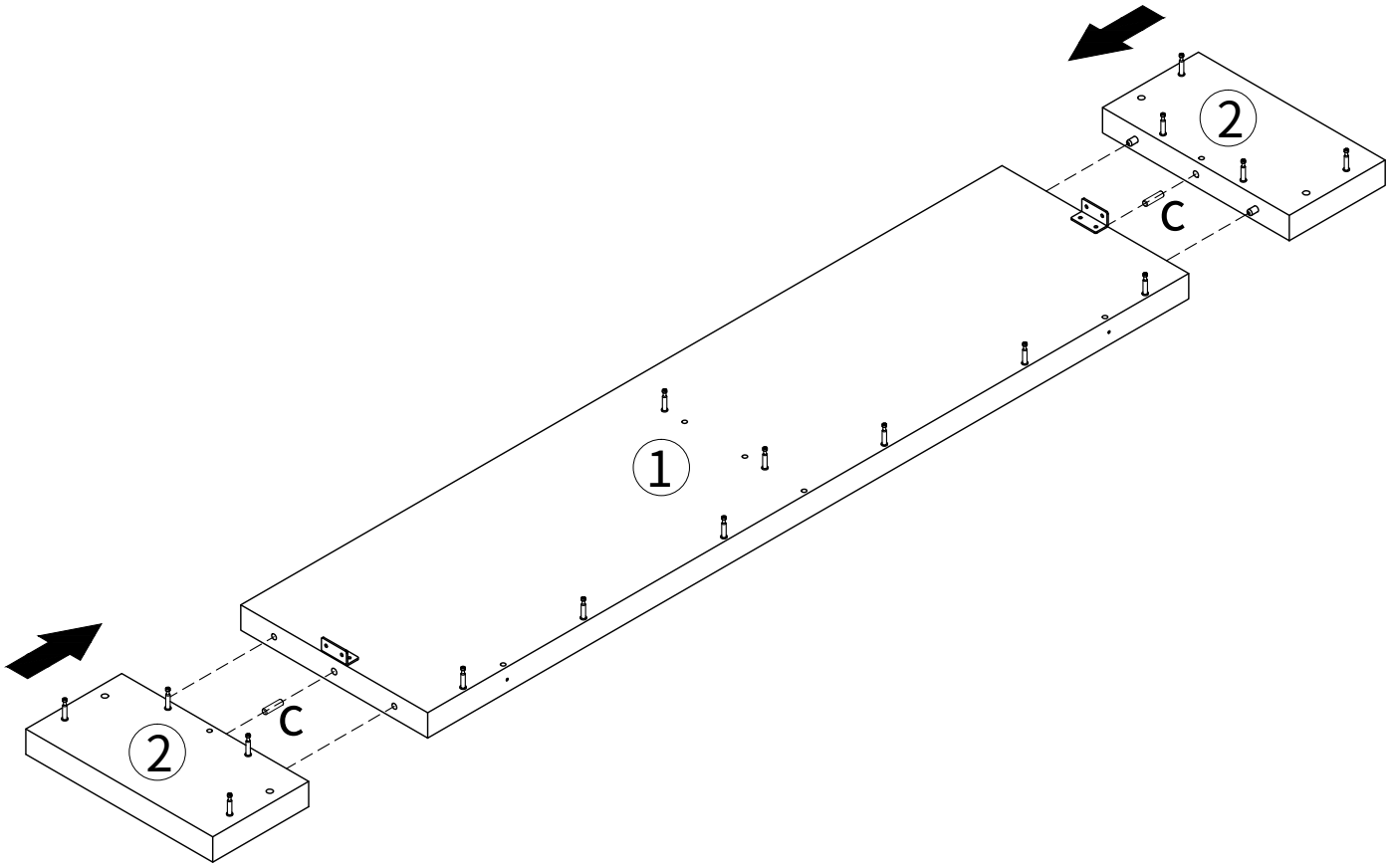



ⓒ2PCS

Assembly Instructions

Step13:

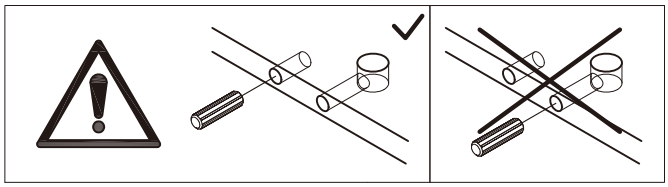

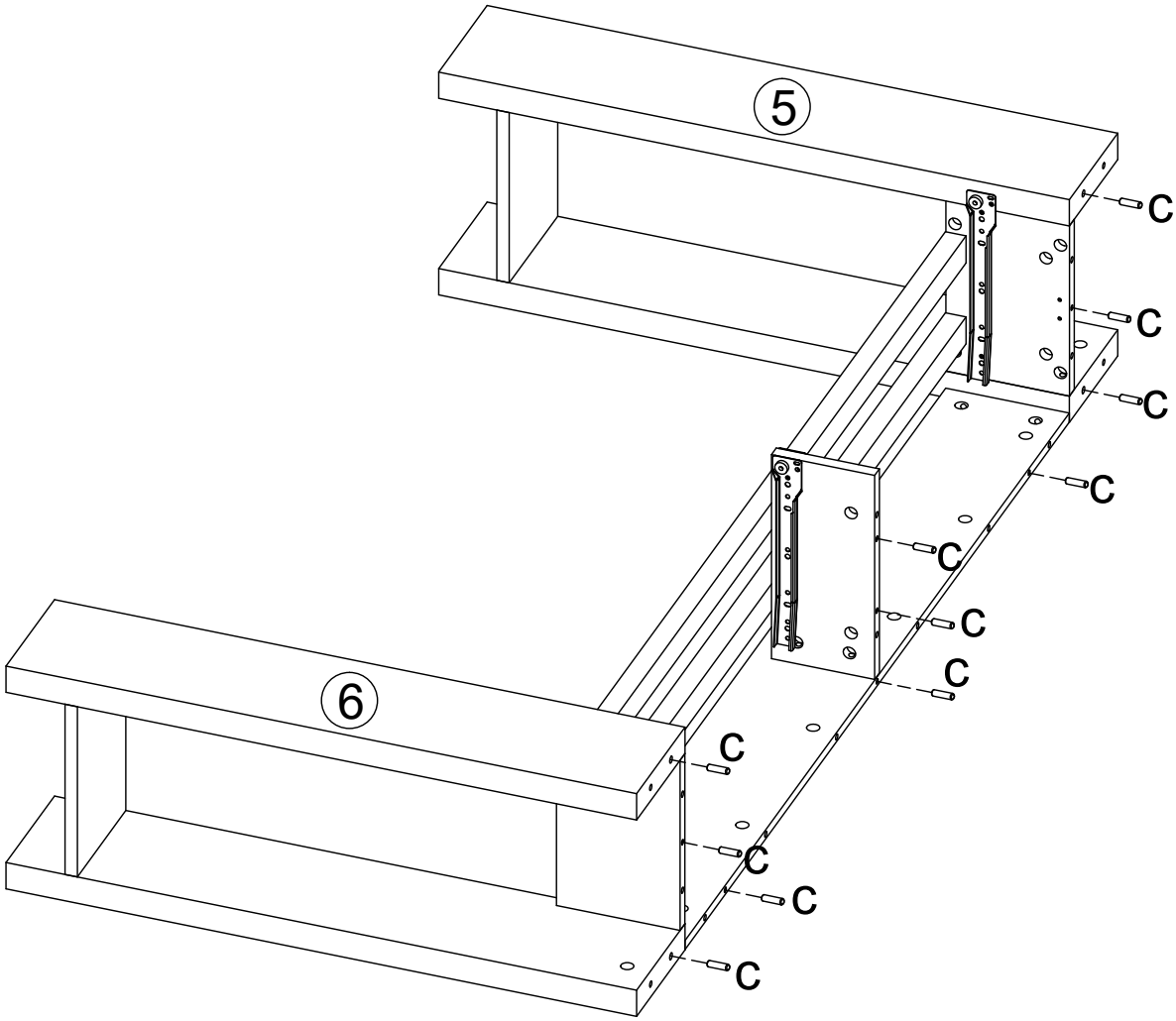

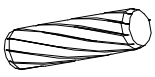

Ⓒ 11PCS

Assembly Instructions

Step14:

Note: Assemble according to the diagram, with two people assisting in installation

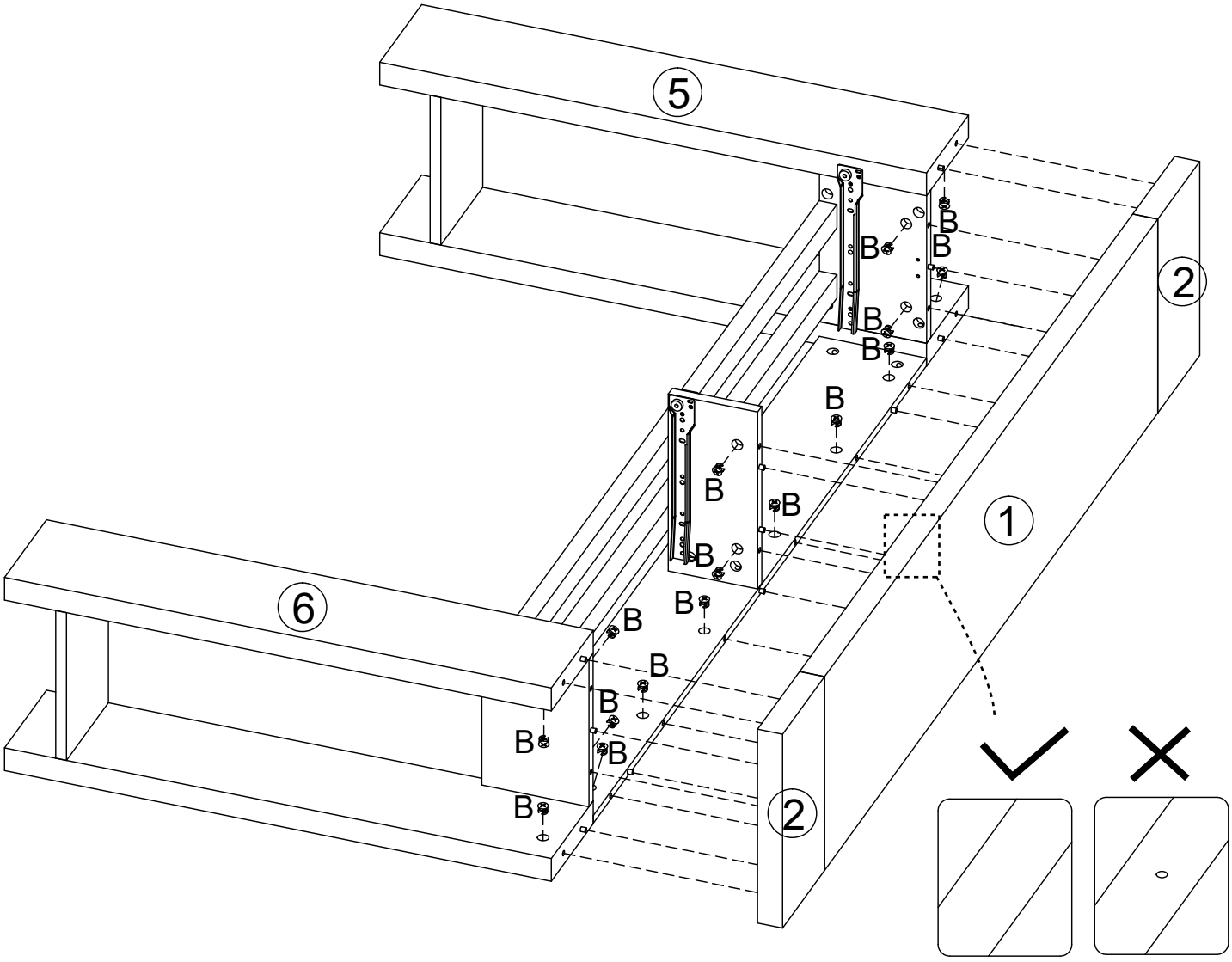

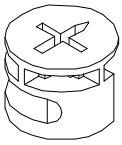

Ⓑ16PCS

Assembly Instructions

Step15:

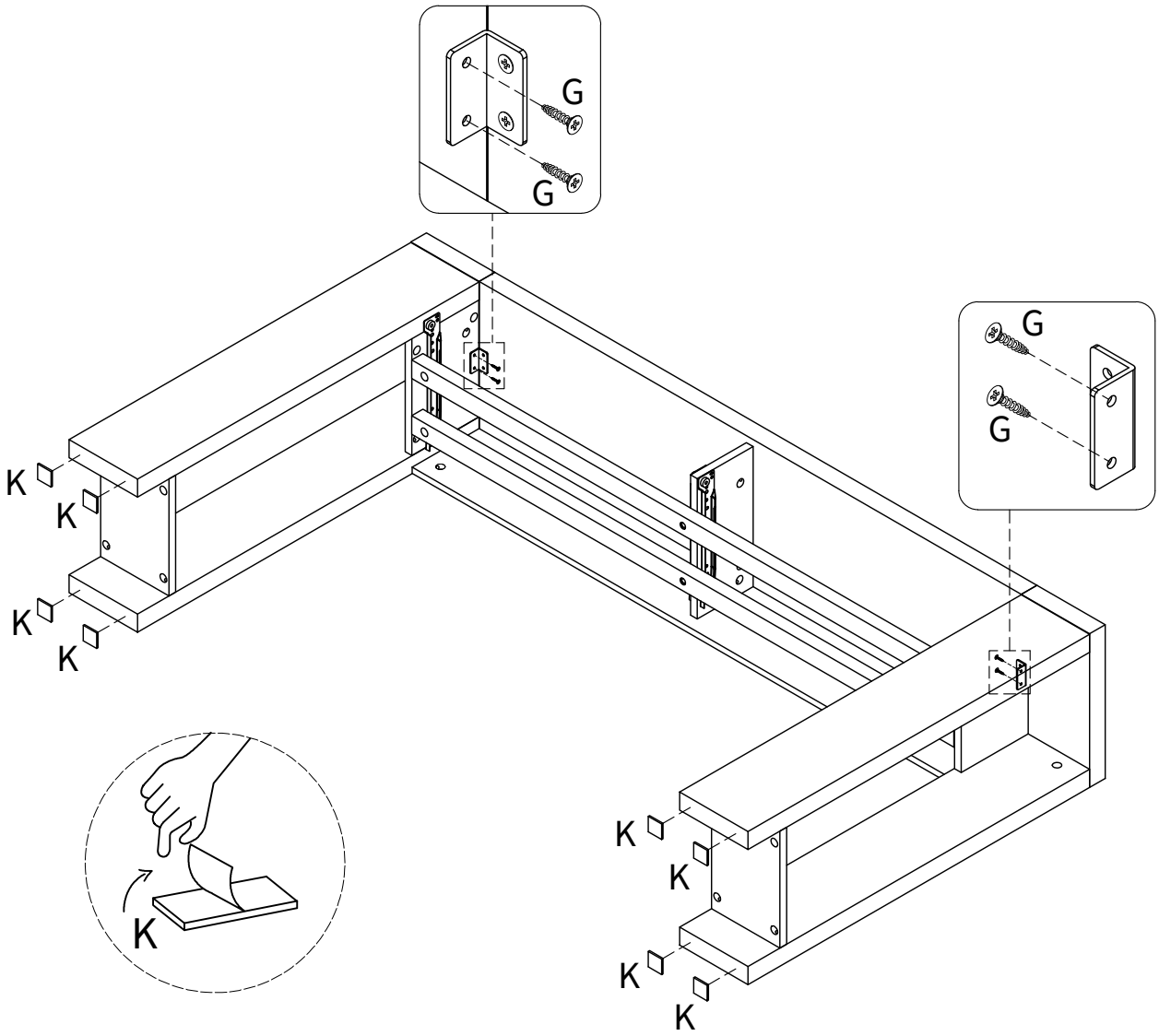

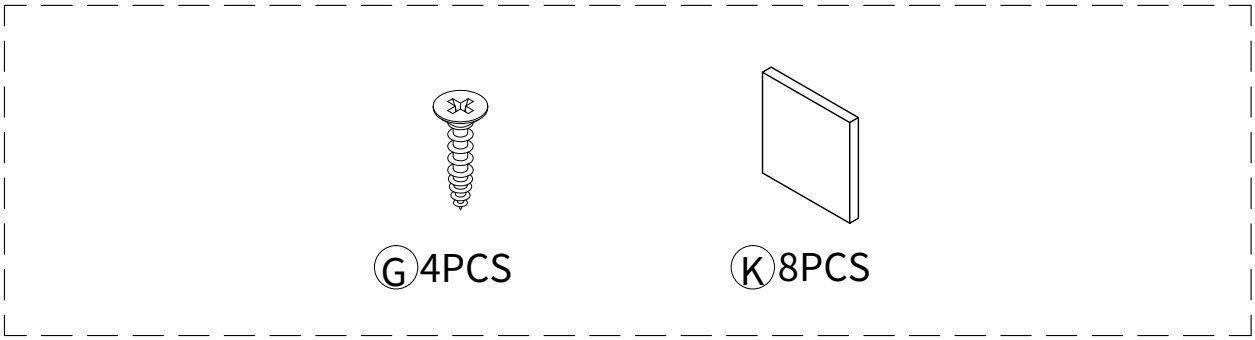

Assembly Instructions

Step16:

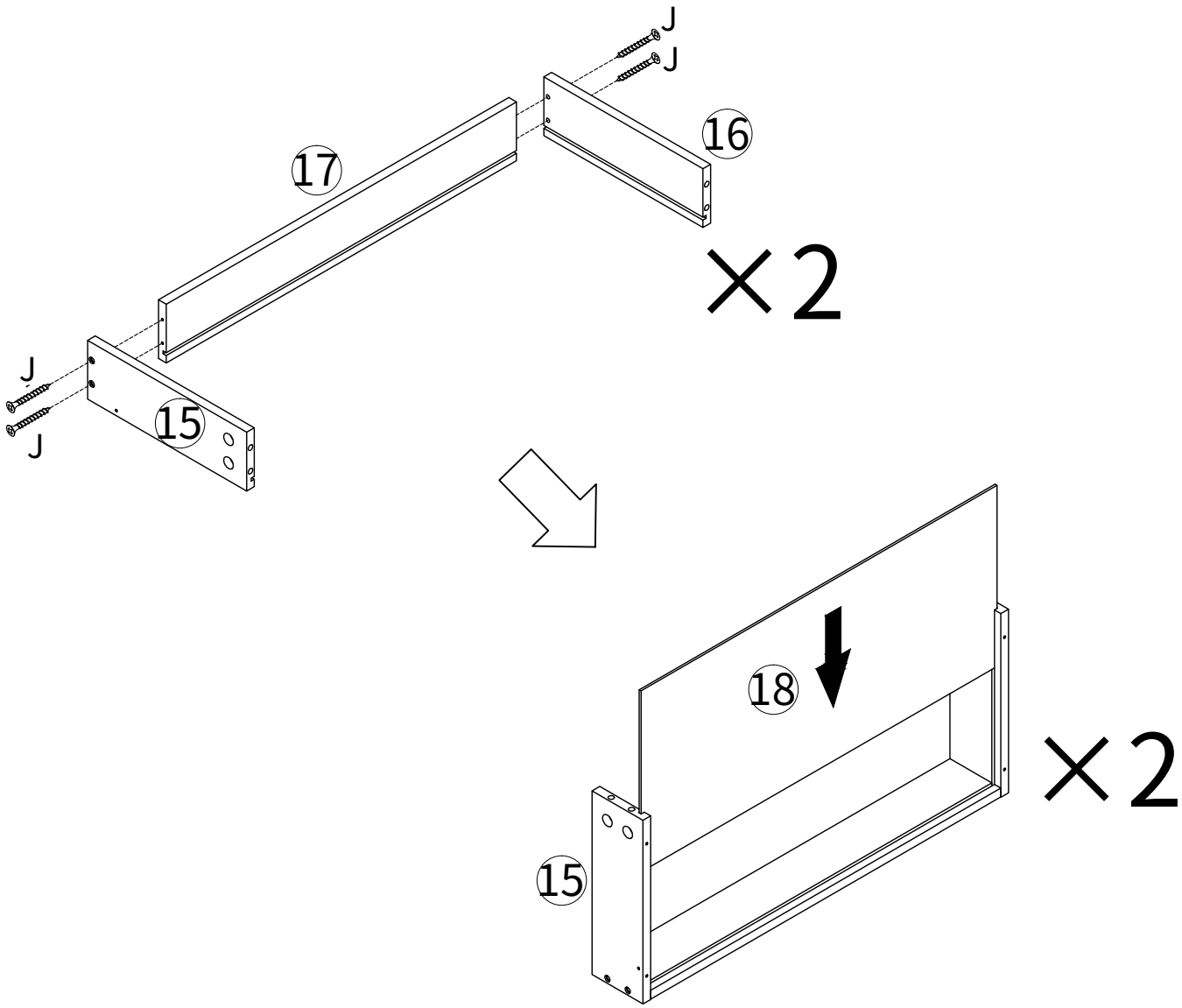

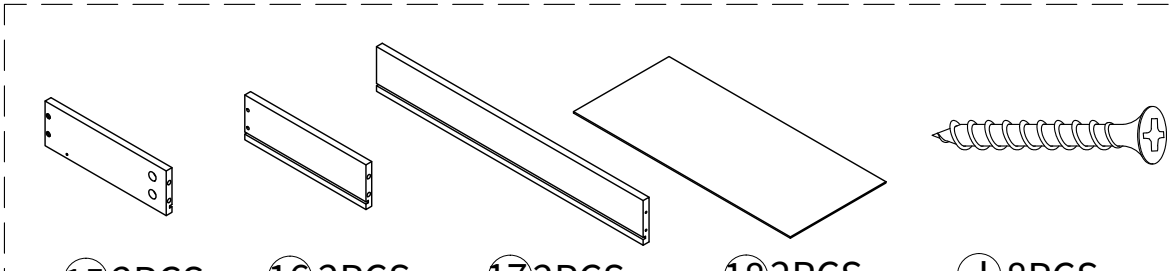

Assembly Instructions

Step17:

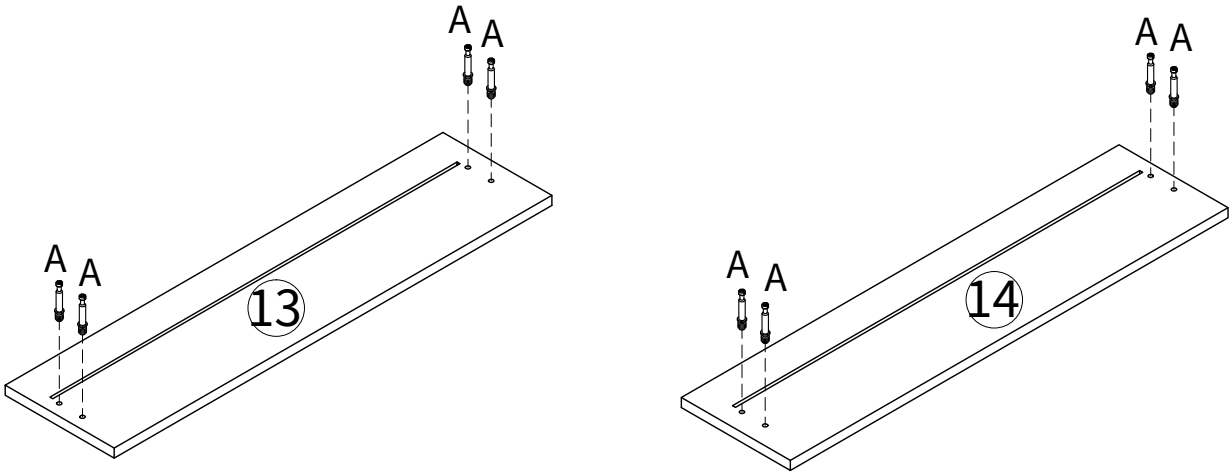

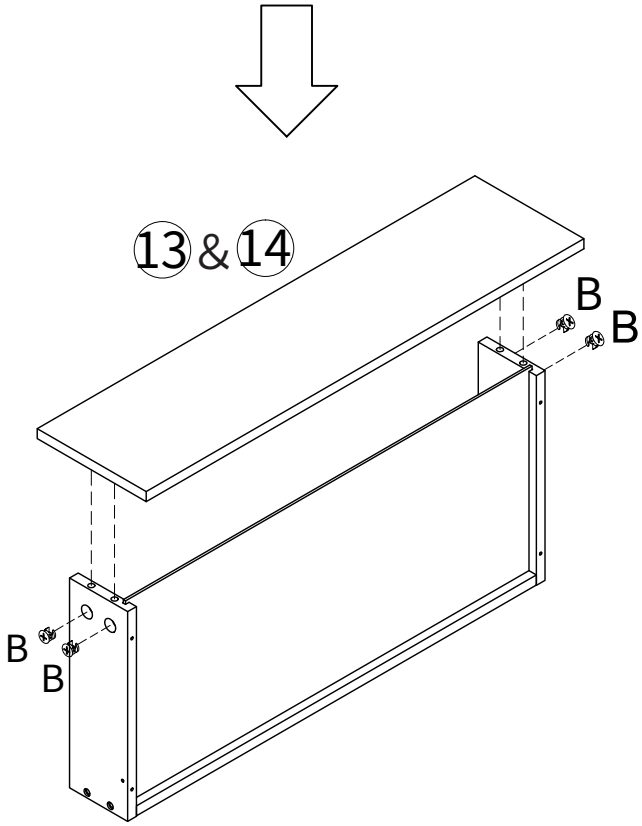

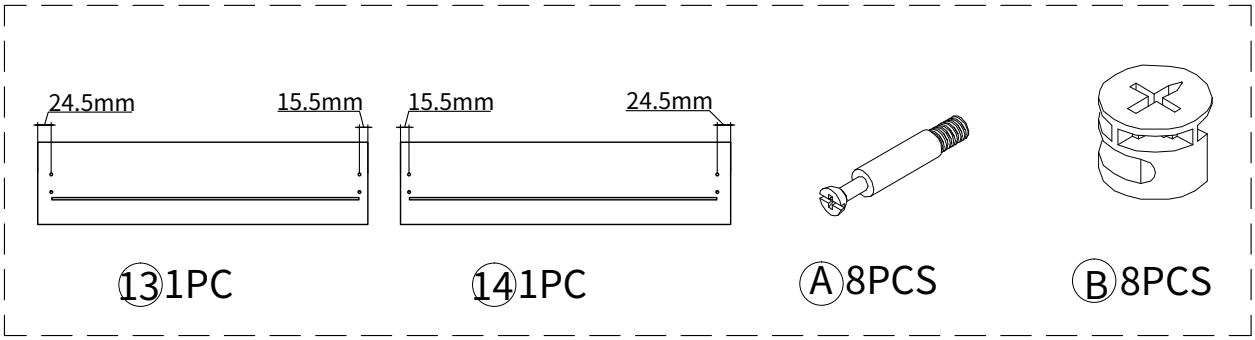

Assembly Instructions

Step18:

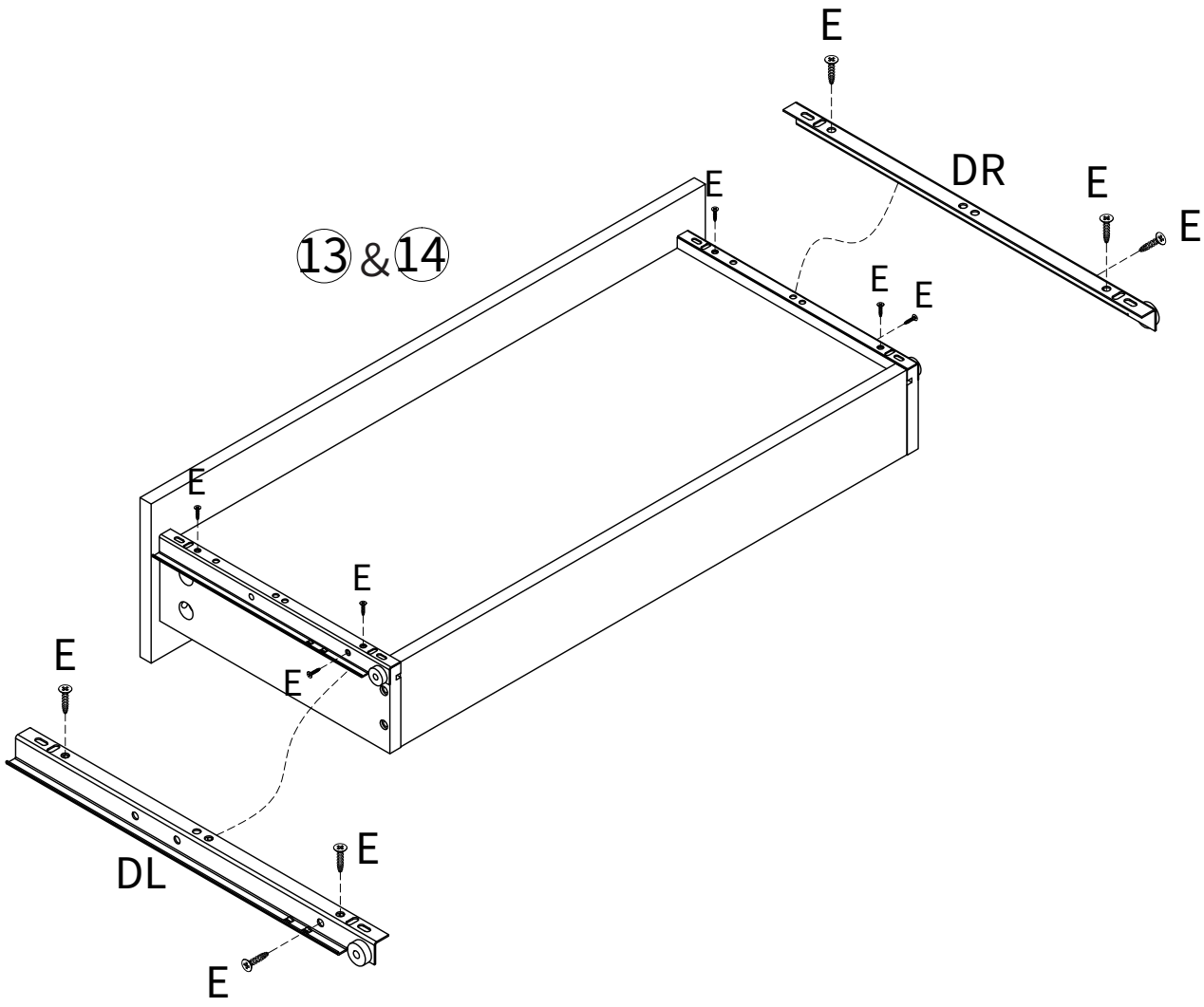

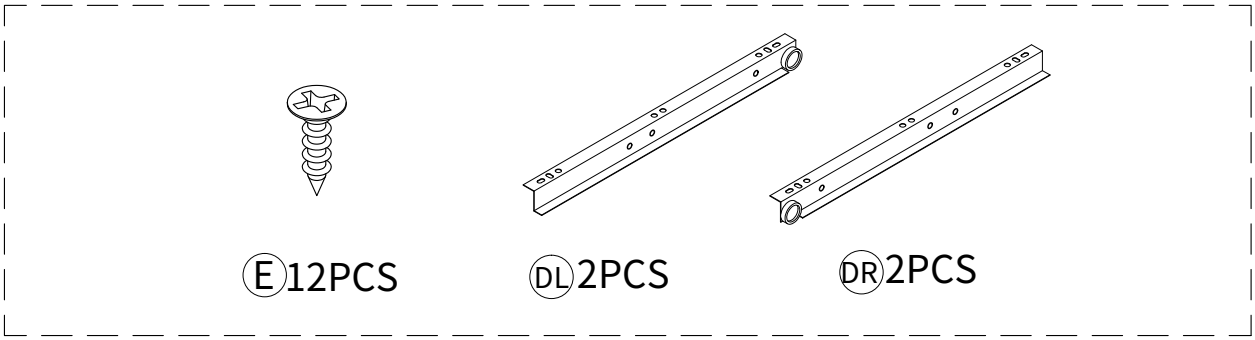

Assembly Instructions

Step19:

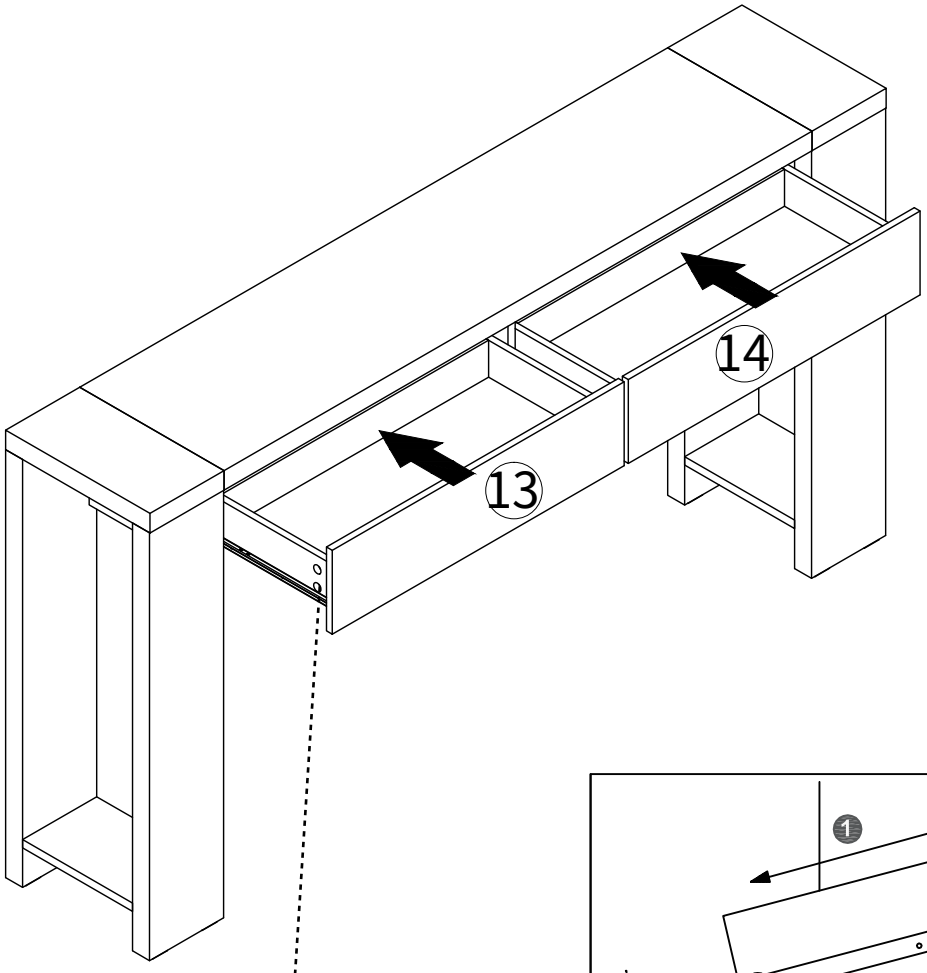

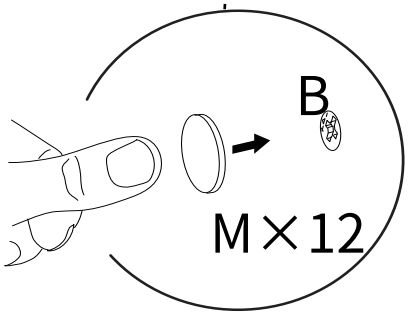

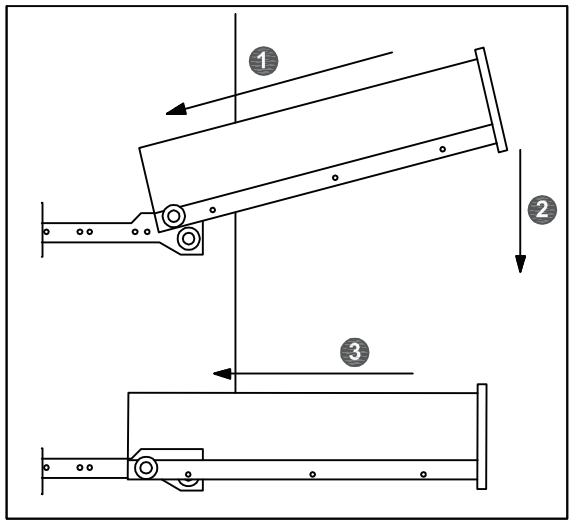

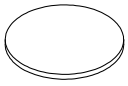

Ⓜ12PCS

Assembly Instructions

Step20：

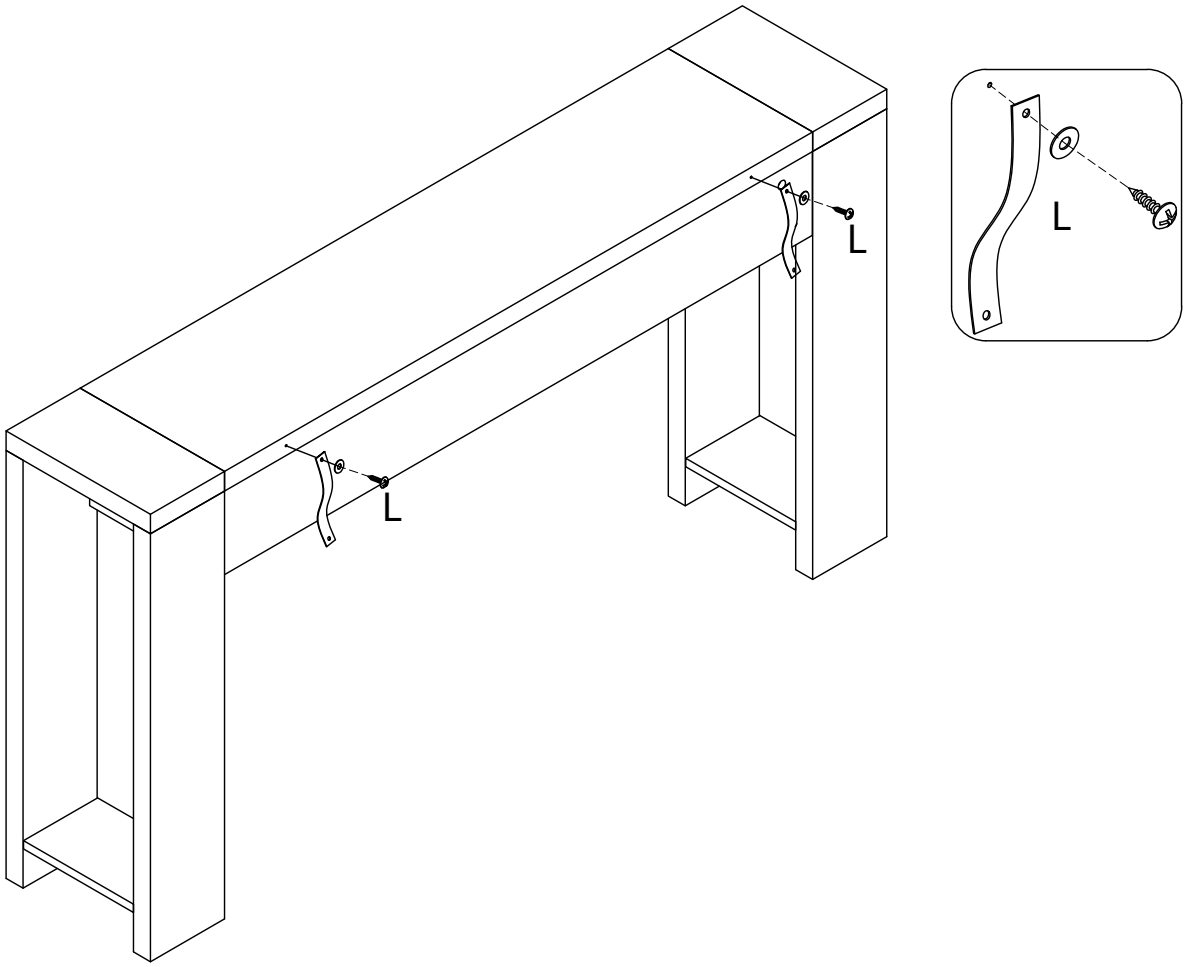

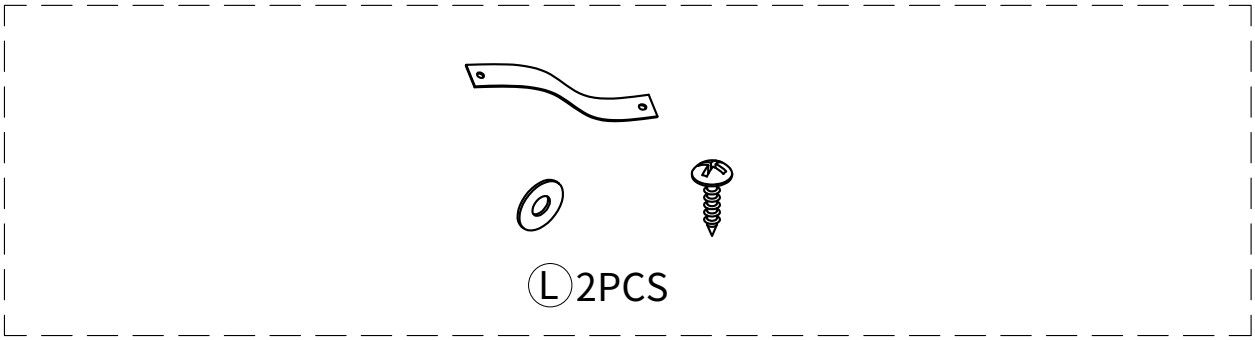

Assembly Instructions

Step21：

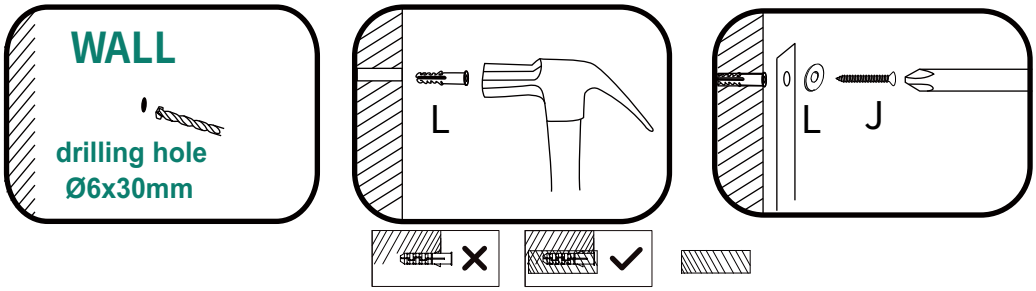

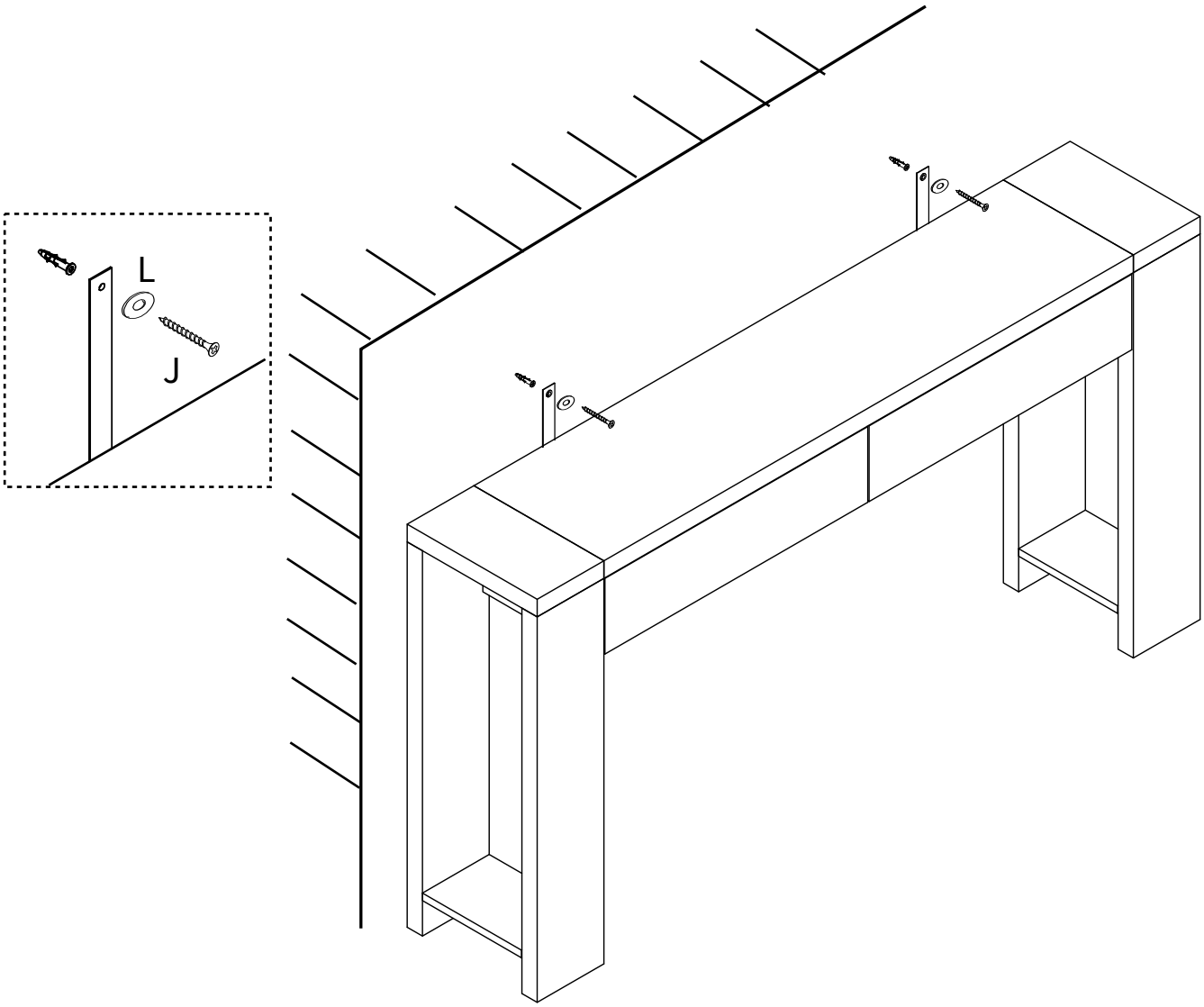



Ⓙ2PCS　　Ⓛ2PCS

Problems You May Encounter

PROBLEMS	SOLUTIONS
Non-human caused damage during usage.	Please Keep the product and send us photos of it. We will ascertain the cause of the product damage within 48 hours and provide a satisfactory solution.
Mismatch of screw hole positions between components.	1. Please tighten the screws on the board by 70%, do not tighten completely. 2. Adjust the direction of the component to check that the wrong hole position has not been selected.
Product is unstable after being assembled.	1. Check if the screws are tightened. 2. Read through out the manual, check are there any parts installed incorrectly or missing assembled.
Any missing or damaged components.	To solve the problem. We are committed to providing you with **Free component shipping and replacement**