MANUAL INSTRUCTION

L-Shape Wardrobe ArmoireCloset

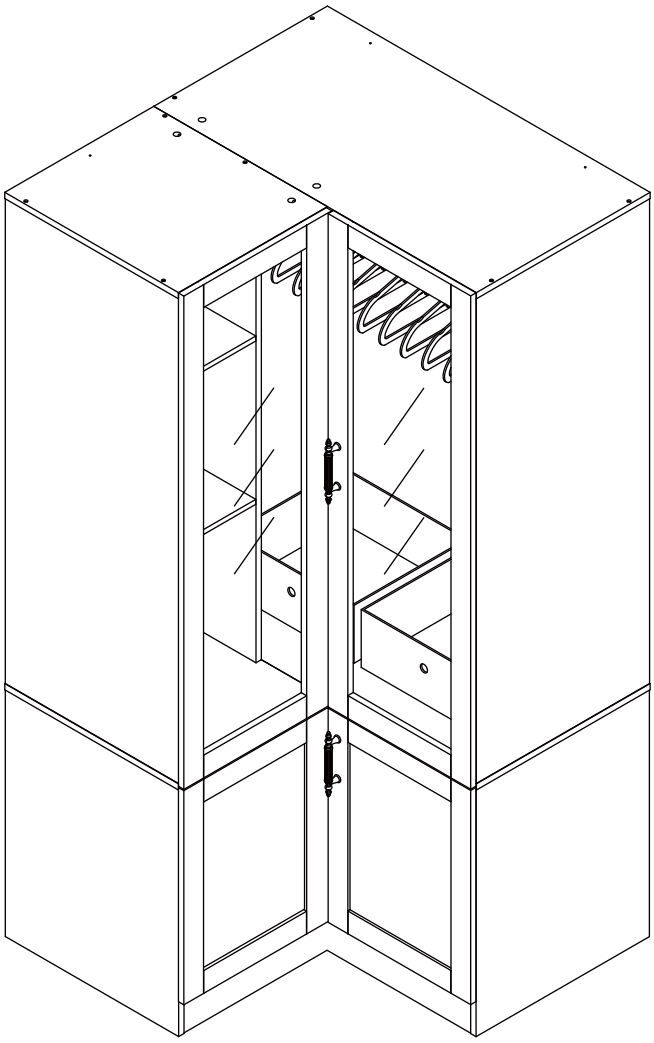

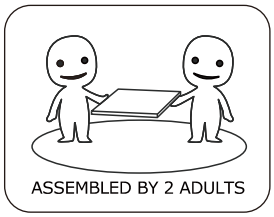

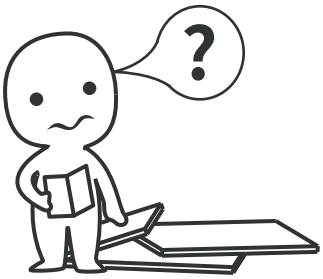

IMPORTANT INFORMATION!

please read the entire manual before starting to assemble and/or using this product.follow the manual thoroughly and keep it for further reference.



AVOID SCRATCHES!

In order to avoid scratching this furnuture should be assembled on a soft layer-could be a rug.

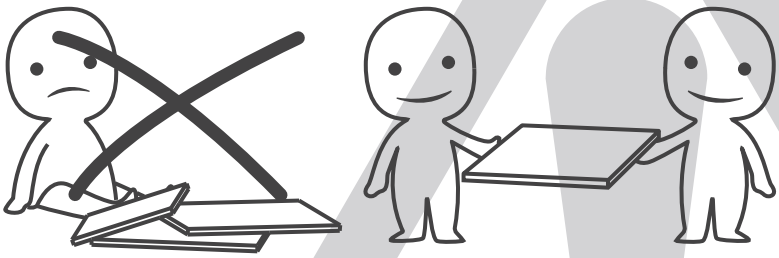

IMPROVE EFFICIENCY !

Try to find a partner to install with you, which can speed up the installation efficiency and shorten the time.

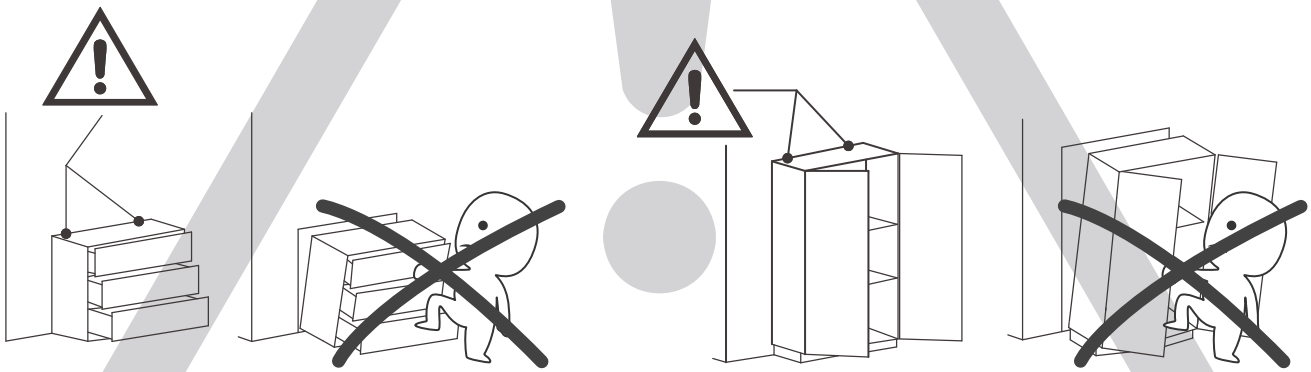

ANTI-TOPPLE WARNING !

Overturned furniture can cause serious or fatal crush injuries. To prevent tipping over, be sure to use the wall attachment, if not included with this product. Please purchase the wall attachment that fit your wall. If unsure, seek professional advice. Please read and follow each step of the instructions carefully.

IMPORTANT !

It is important that any product which is assembled using any kind of screw is re-tightened 2 weeks after assembly,and once every 3 months - in order to assure stability through-out the lifespan of the product.

For regular maintenance and cleaning of the product, for the frame, please use a rag dipped in neutral detergent to fully wipe it, and then dry it with a clean rag.For glass materials, wipe with a rag dampened with water glass cleaner, and then dry with a dry rag.

Do not use an electric screwdriver, and do not use too much force when installing, because the board is easy to break.

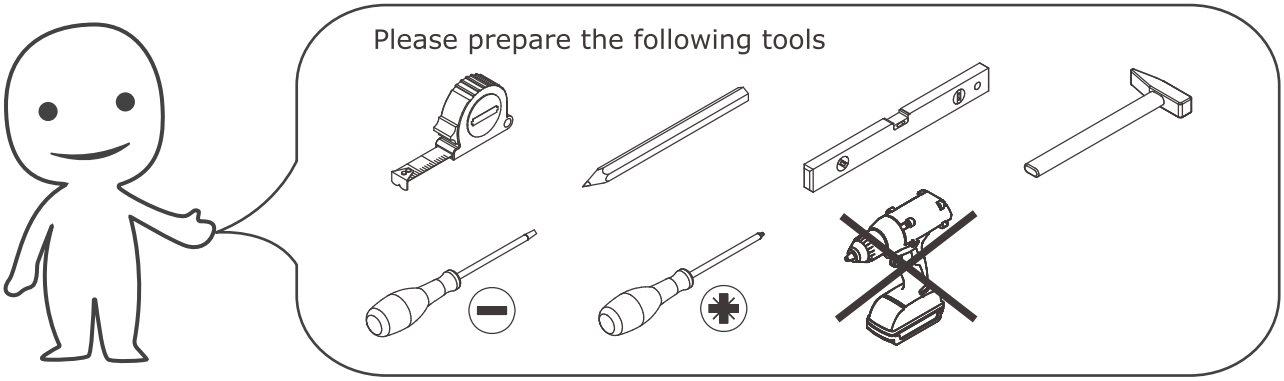
Please prepare the following tools

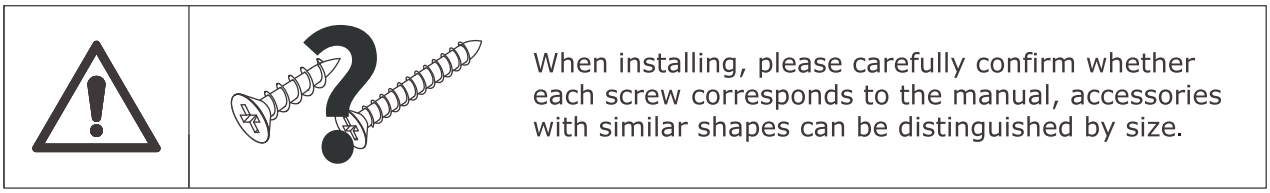
When installing, please carefully confirm whether each screw corresponds to the manual, accessories with similar shapes can be distinguished by size.

HARDWARE

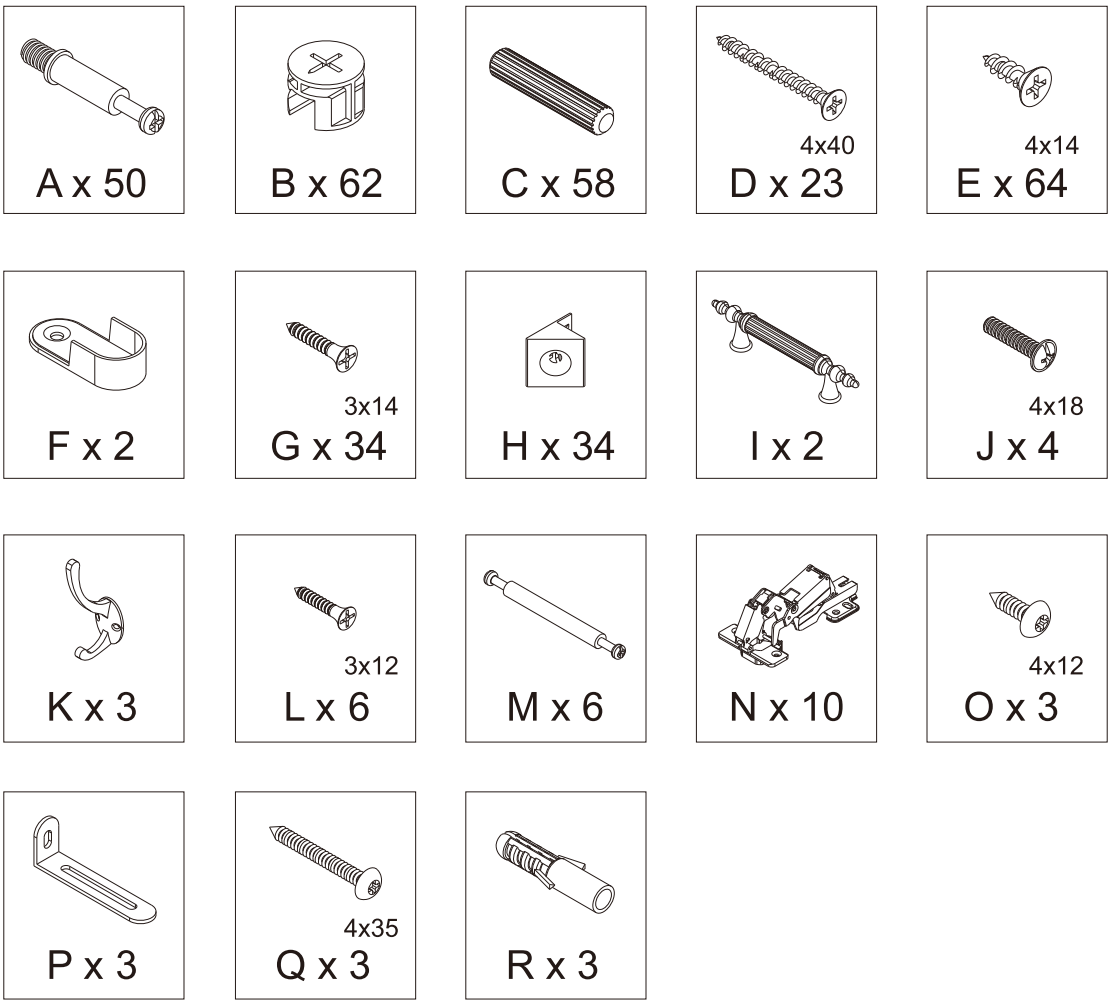
A x 50
B x 62
C x 58
4x40
D x 23
4x14
E x 64
F x 2
3x14
G x 34
H x 34
I x 2
4x18
J x 4
K x 3
3x12
L x 6
M x 6
N x 10
4x12
O x 3
P x 3
4x35
Q x 3
R x 3

PARTS

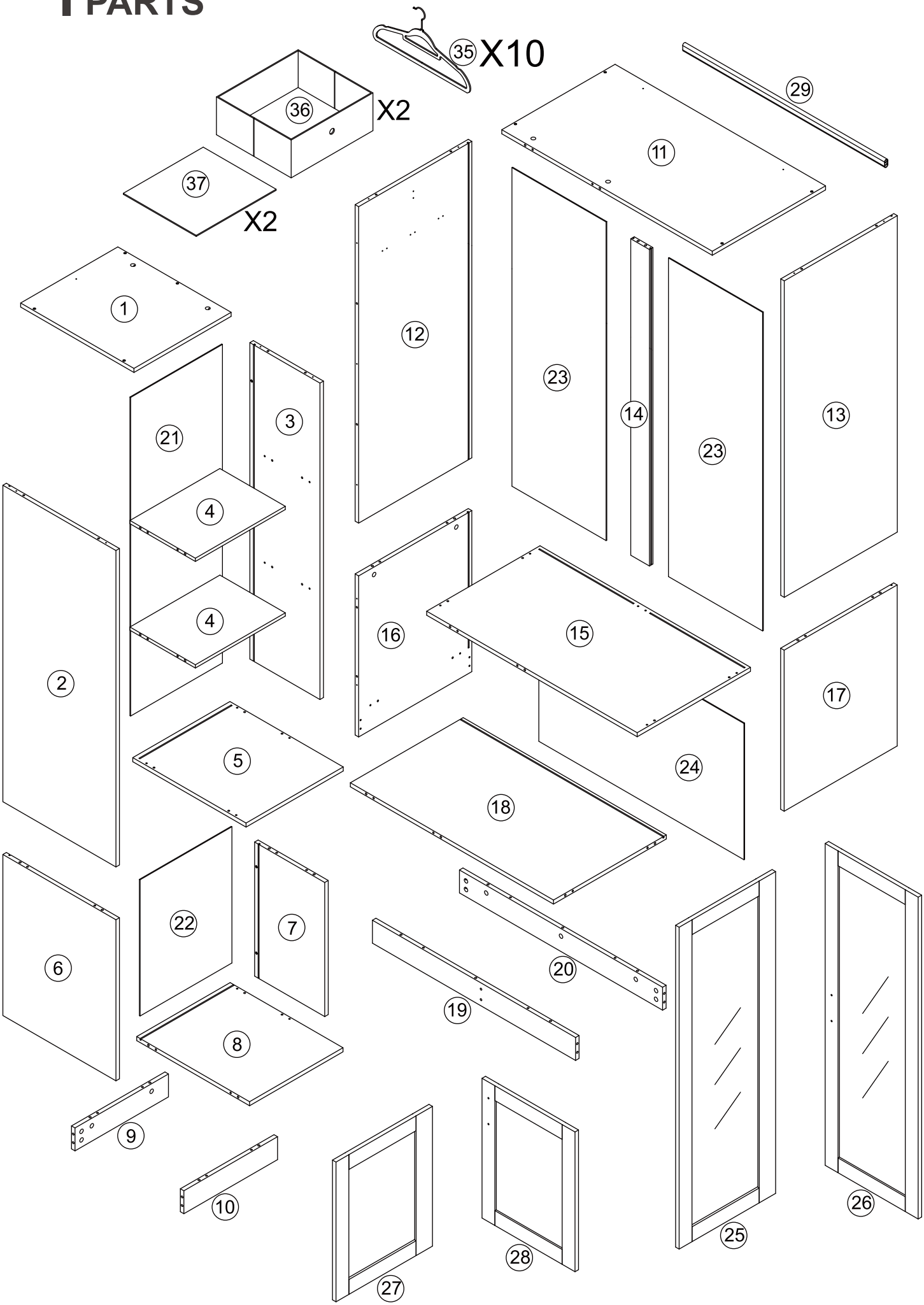
35 X10
36 X2
37 X2
29
11
1
12
23
14
13
21
3
23
4
4
2
16
15
17
5
24
18
6
22
7
20
19
8
9
10
25
26
27
28

PRODUCT ASSEMBLY

1

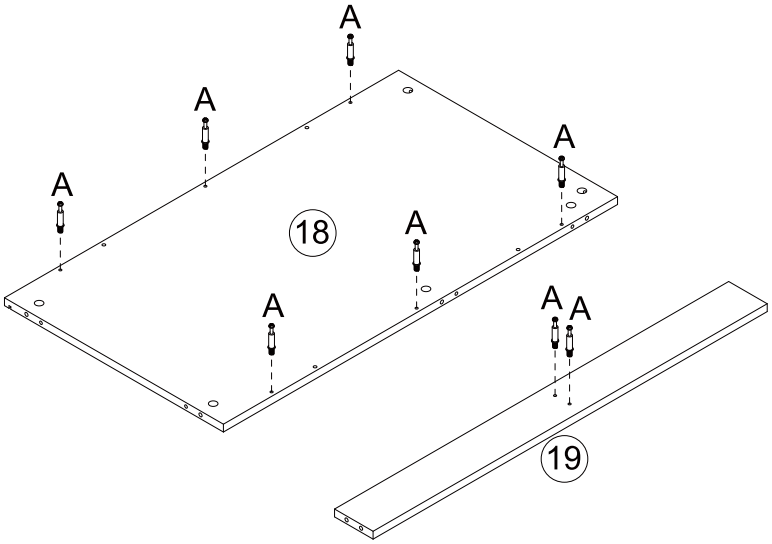

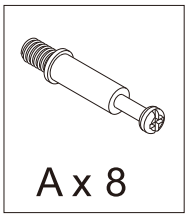

2

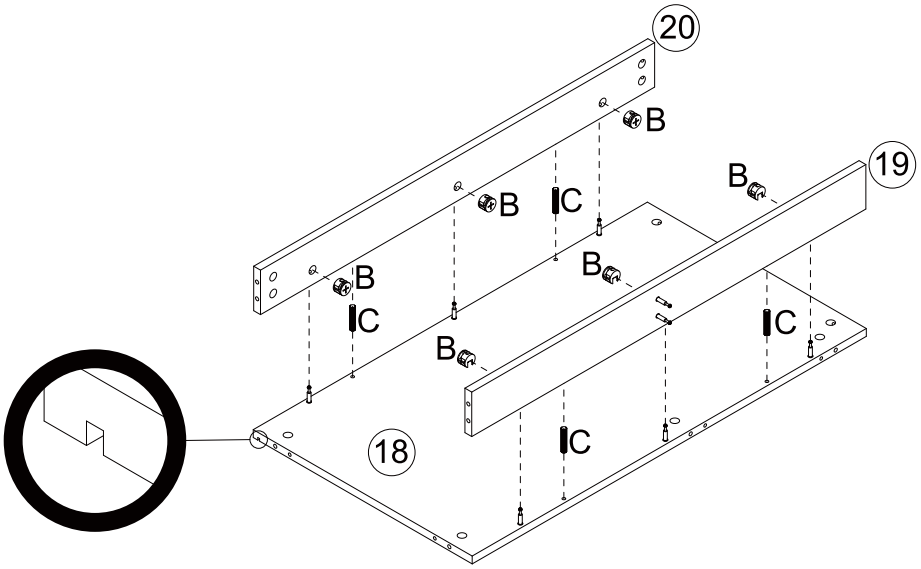

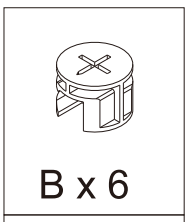

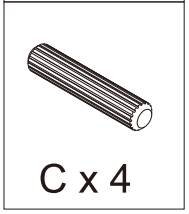

PRODUCT ASSEMBLY

3

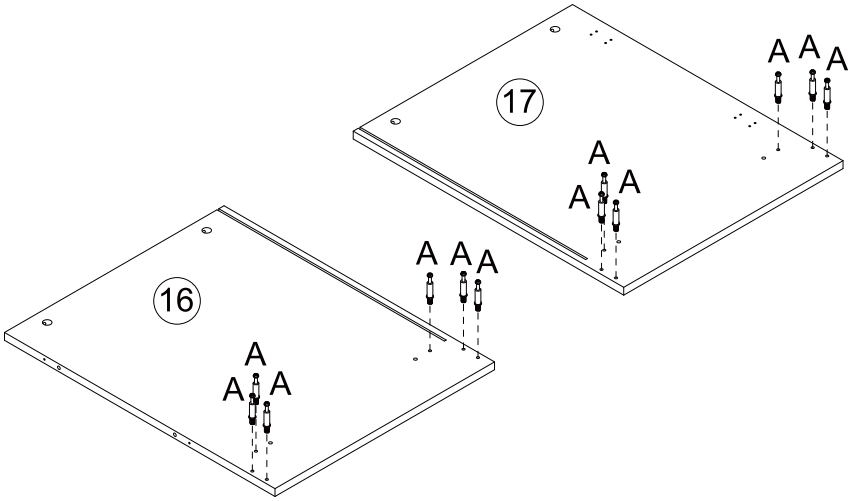

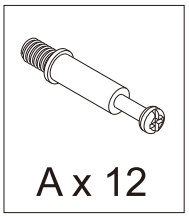

4

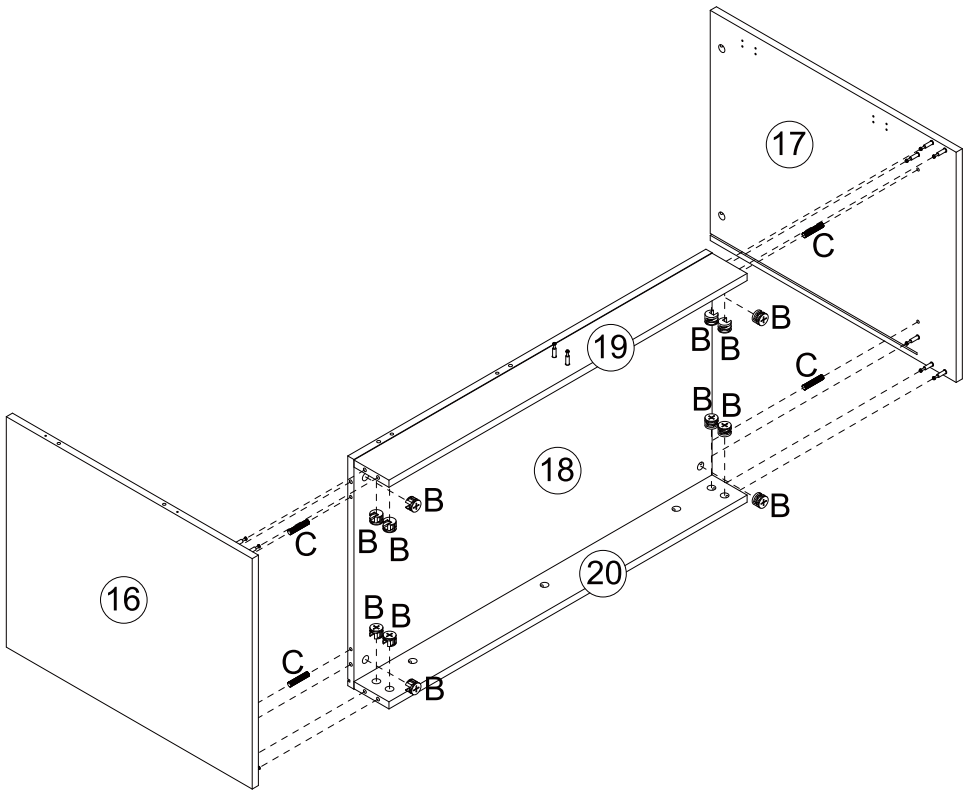



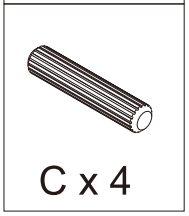

PRODUCT ASSEMBLY

5

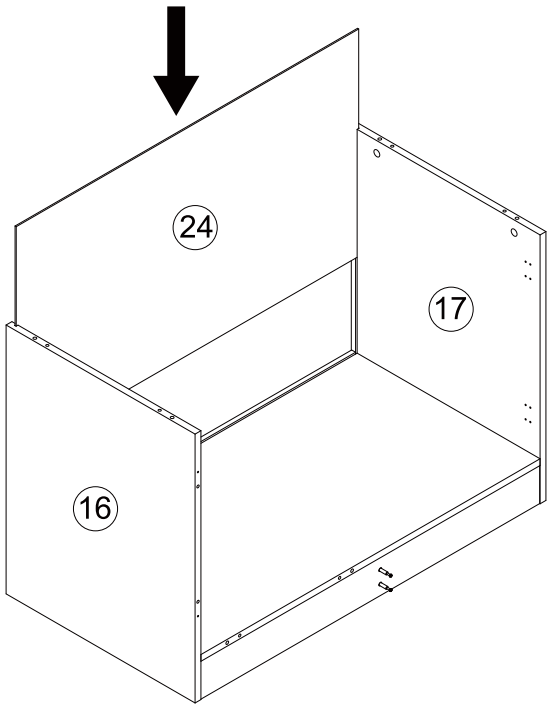

6

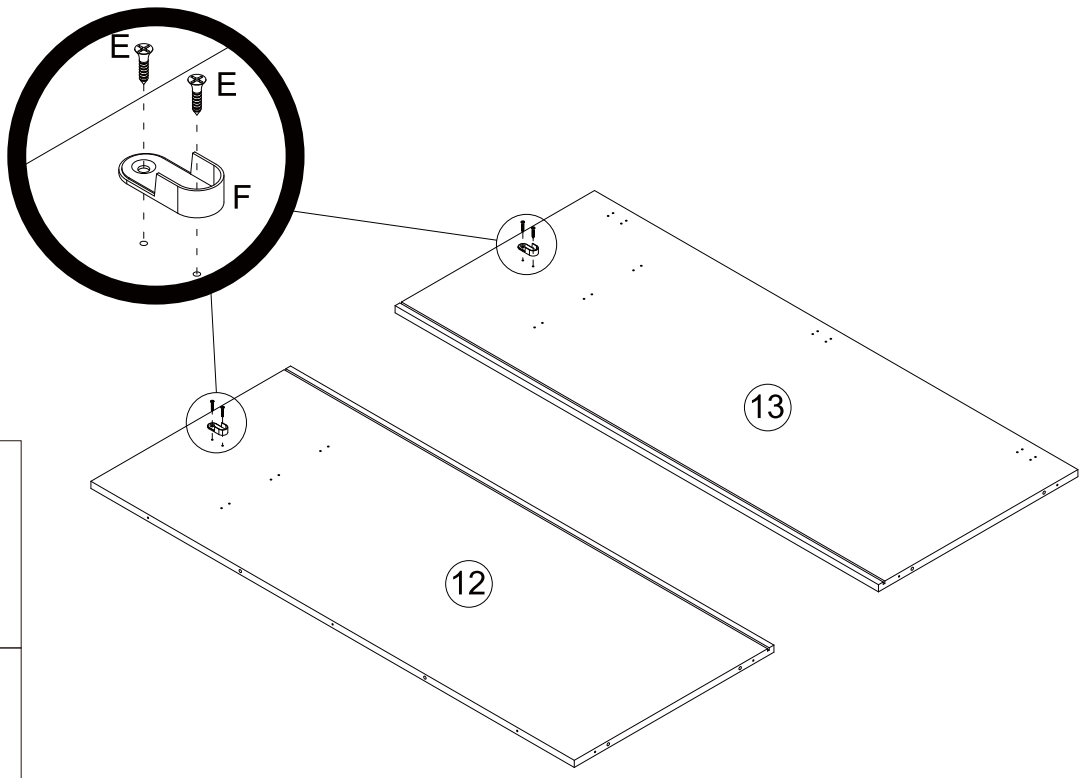

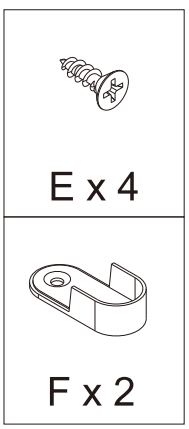

PRODUCT ASSEMBLY

7

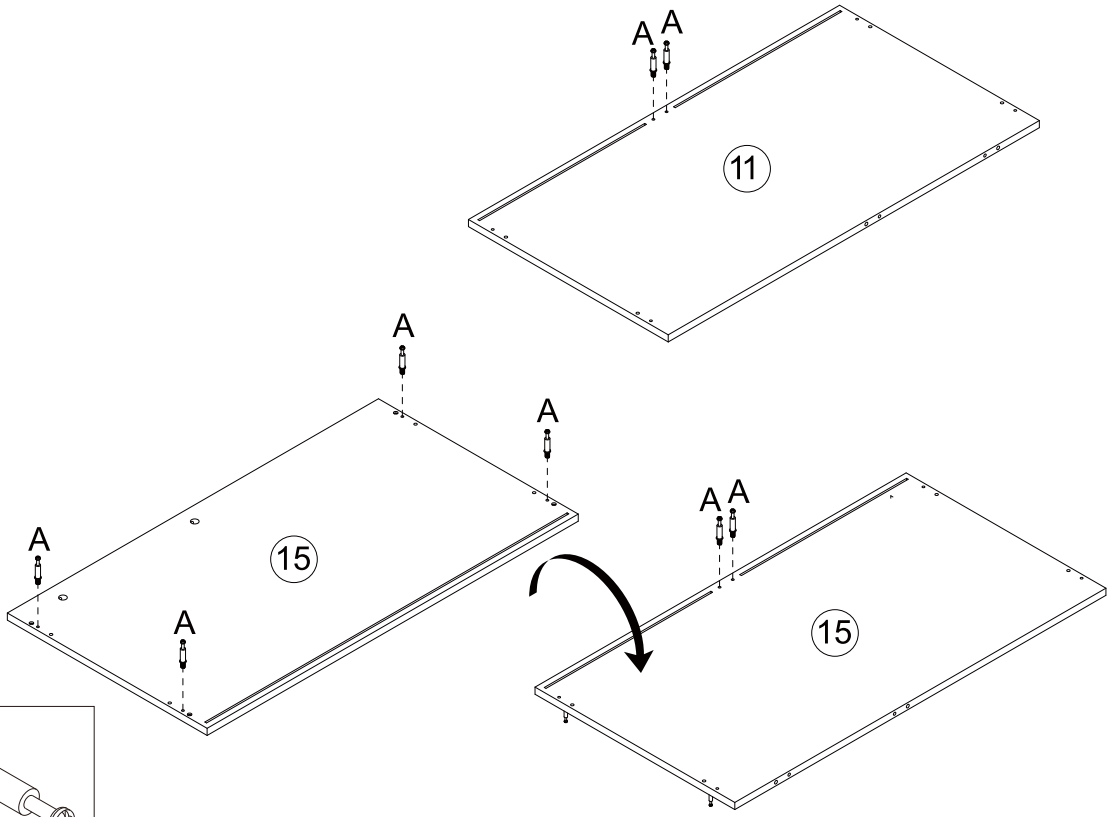

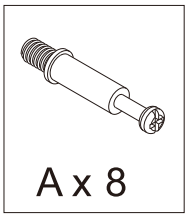

A x 8

8

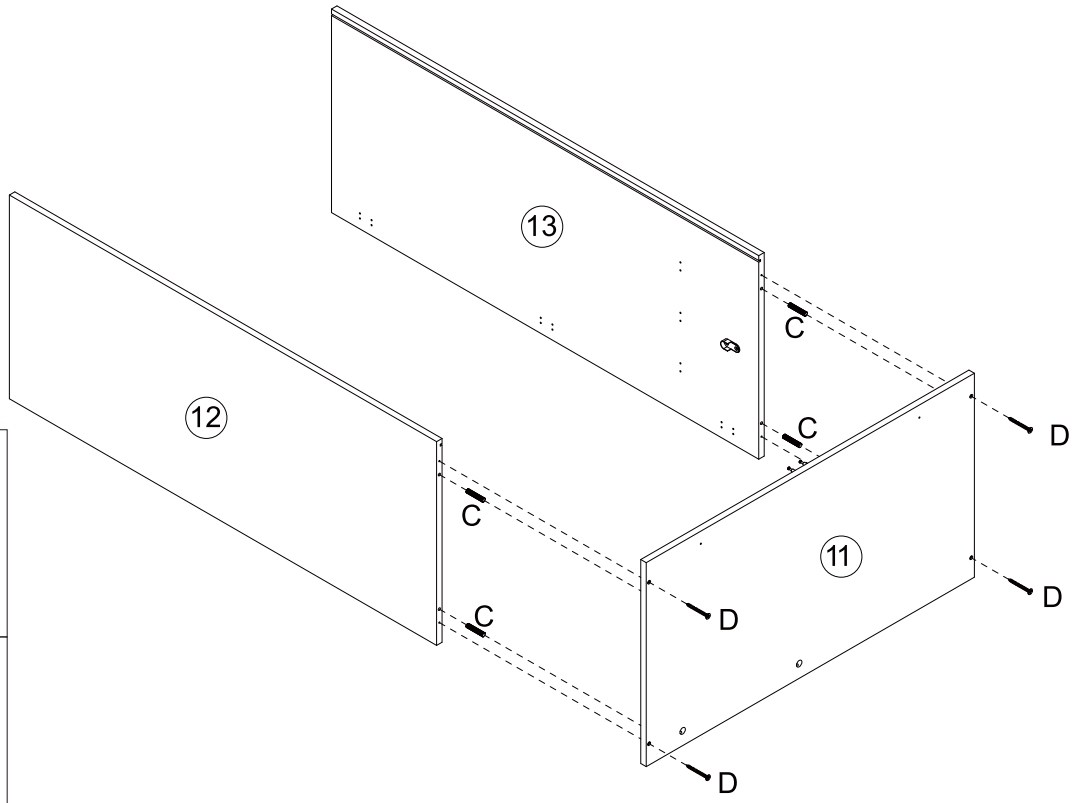

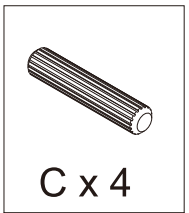

C x 4

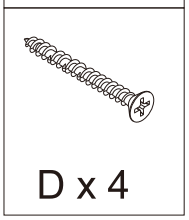

D x 4

PRODUCT ASSEMBLY

9 Note: When the cabinet is turned onto its side, please hold Board 12 and Board 13 until the installation in Step 11 is completed, as shown.

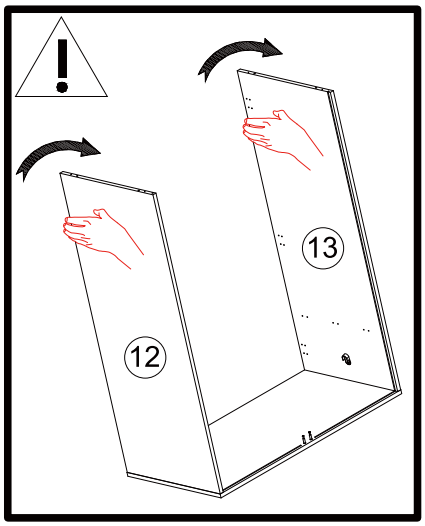

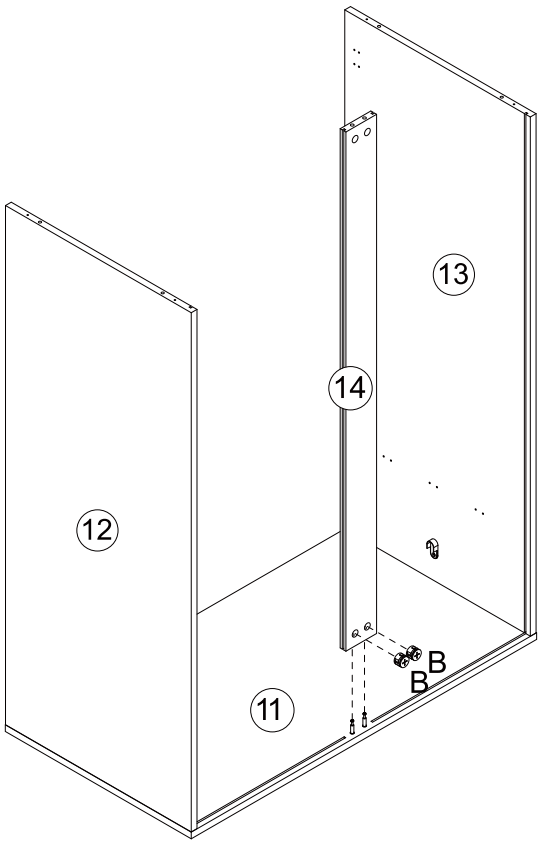

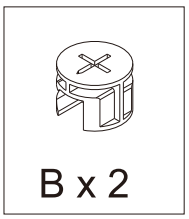

10

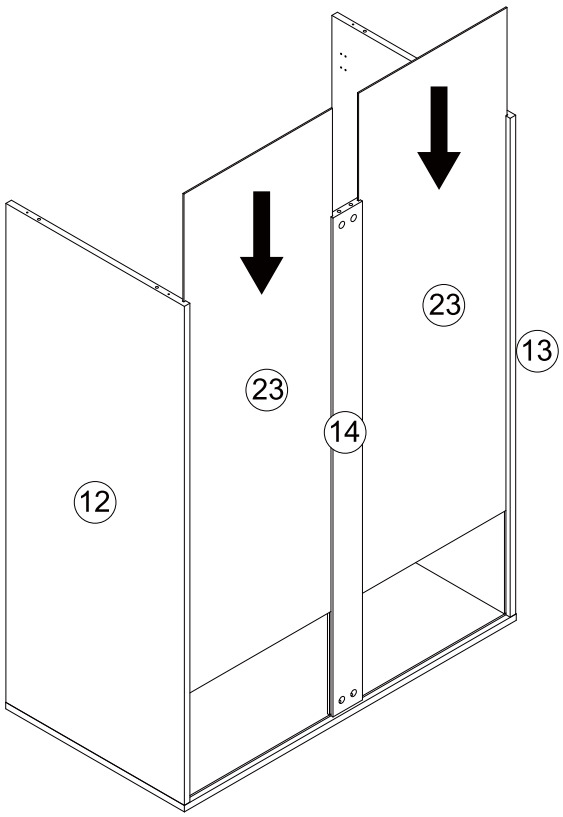

PRODUCT ASSEMBLY

11

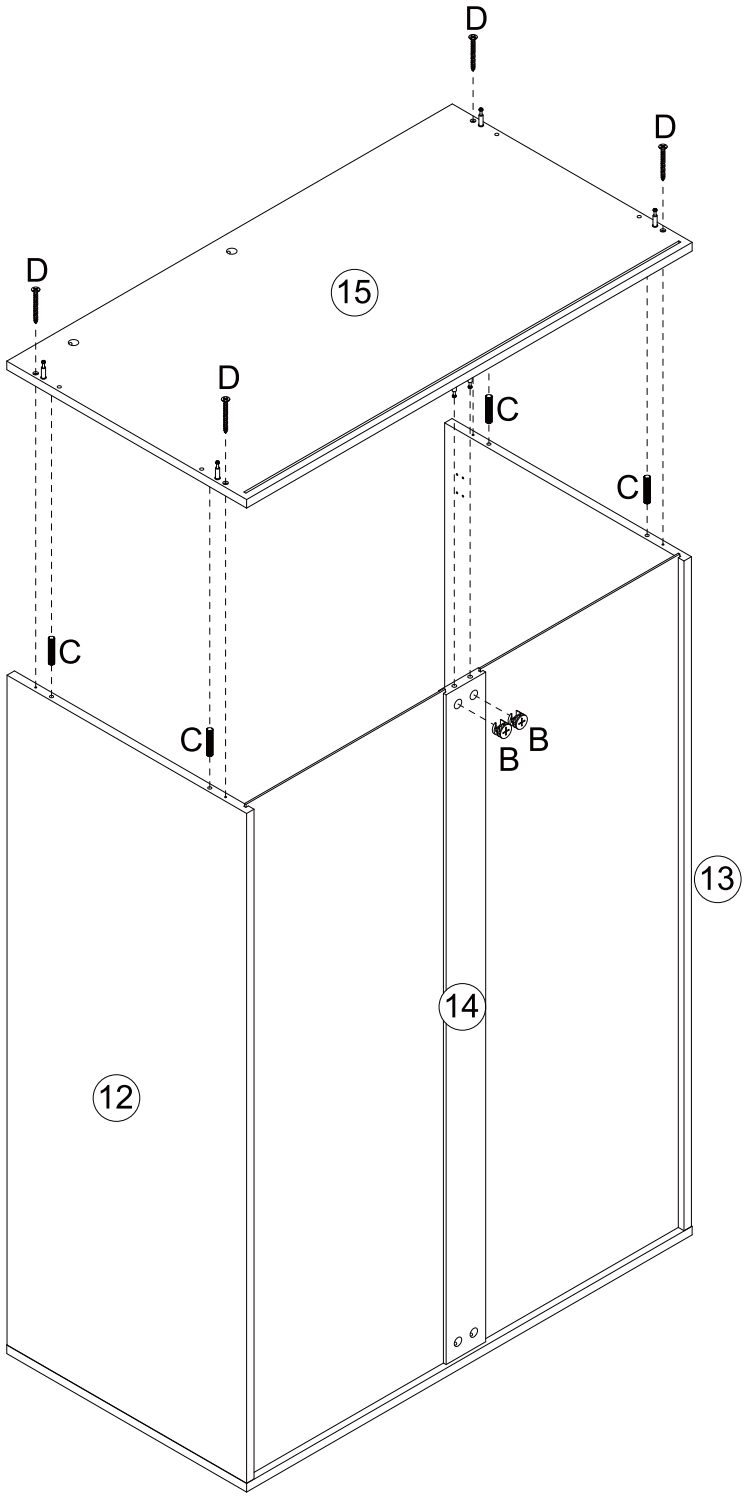

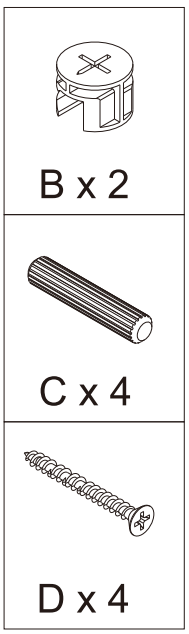

PRODUCT ASSEMBLY

12

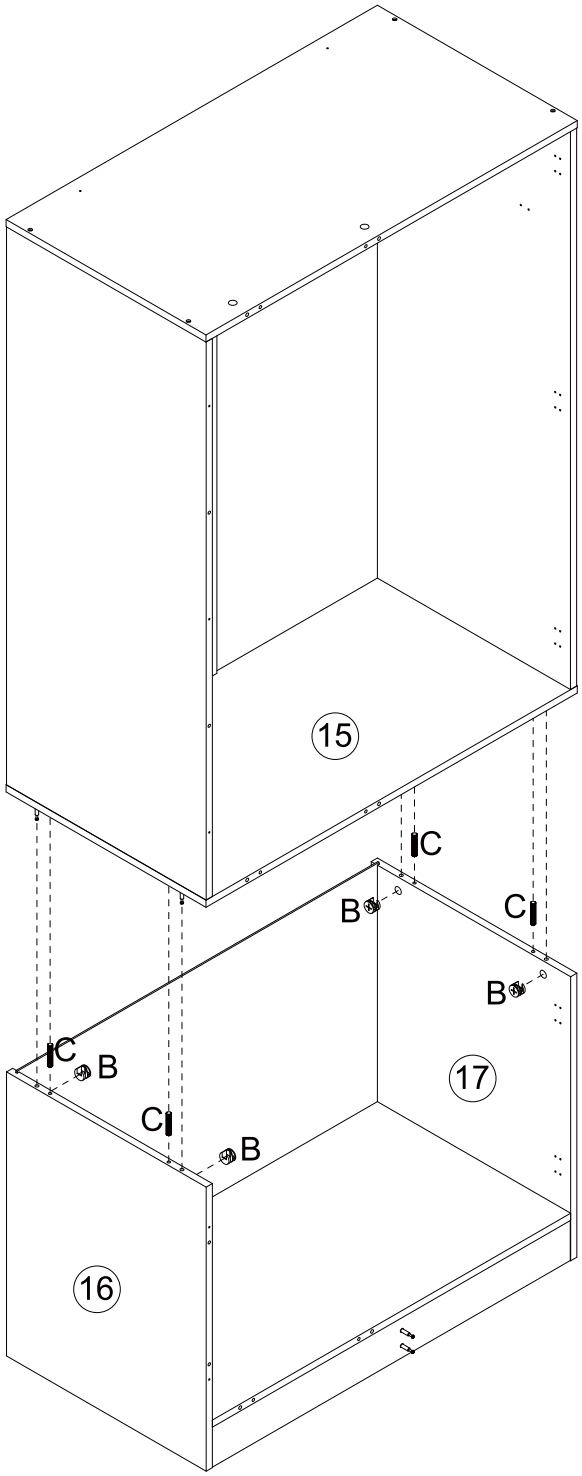

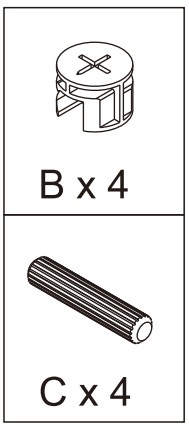

PRODUCT ASSEMBLY

13

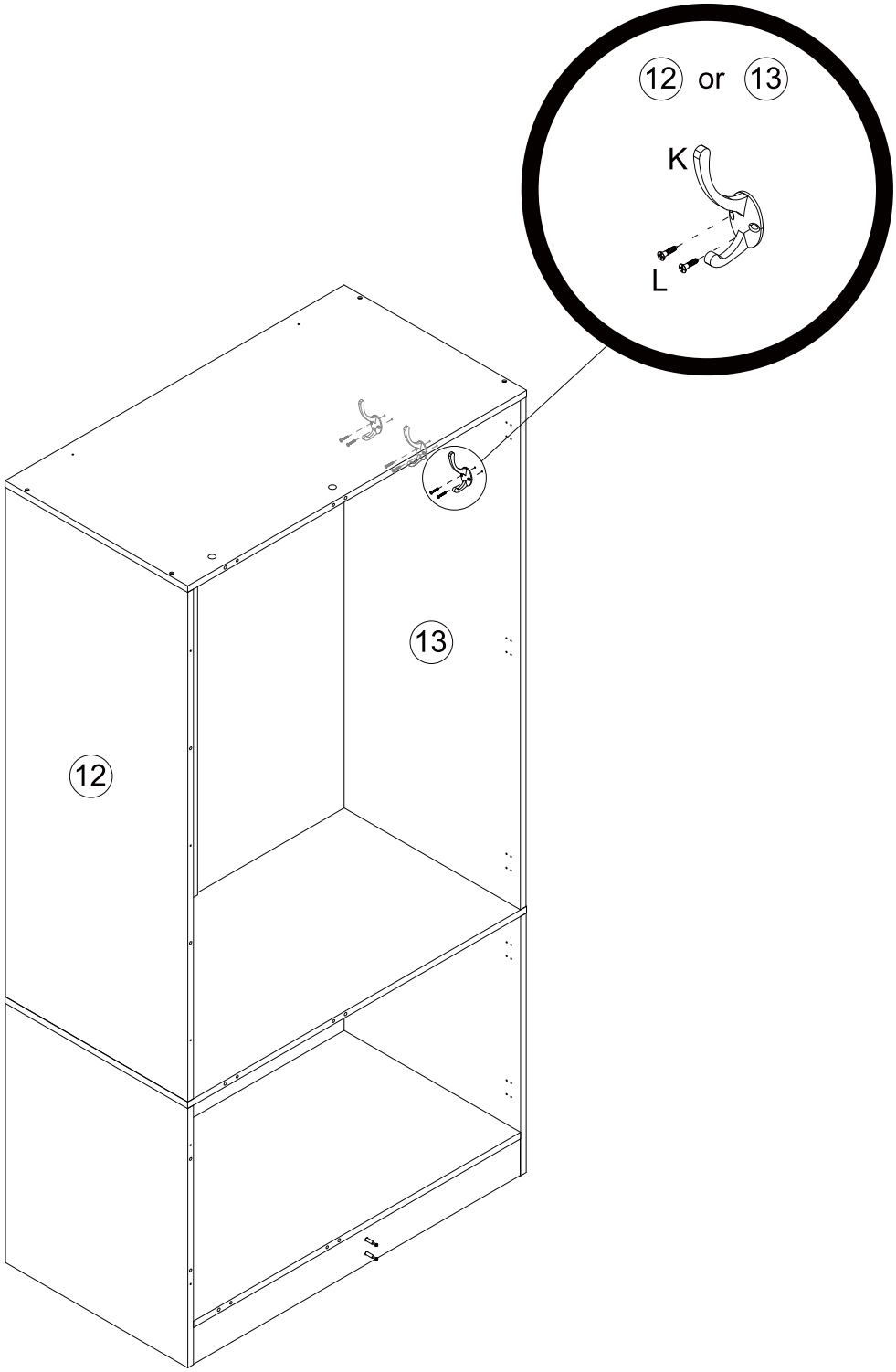

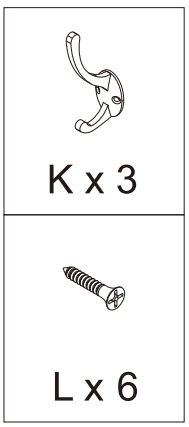

PRODUCT ASSEMBLY

14

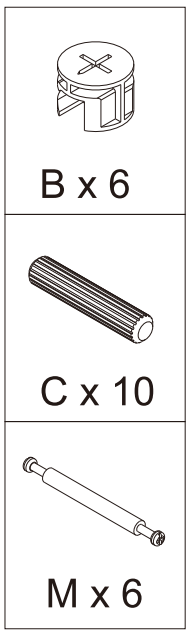

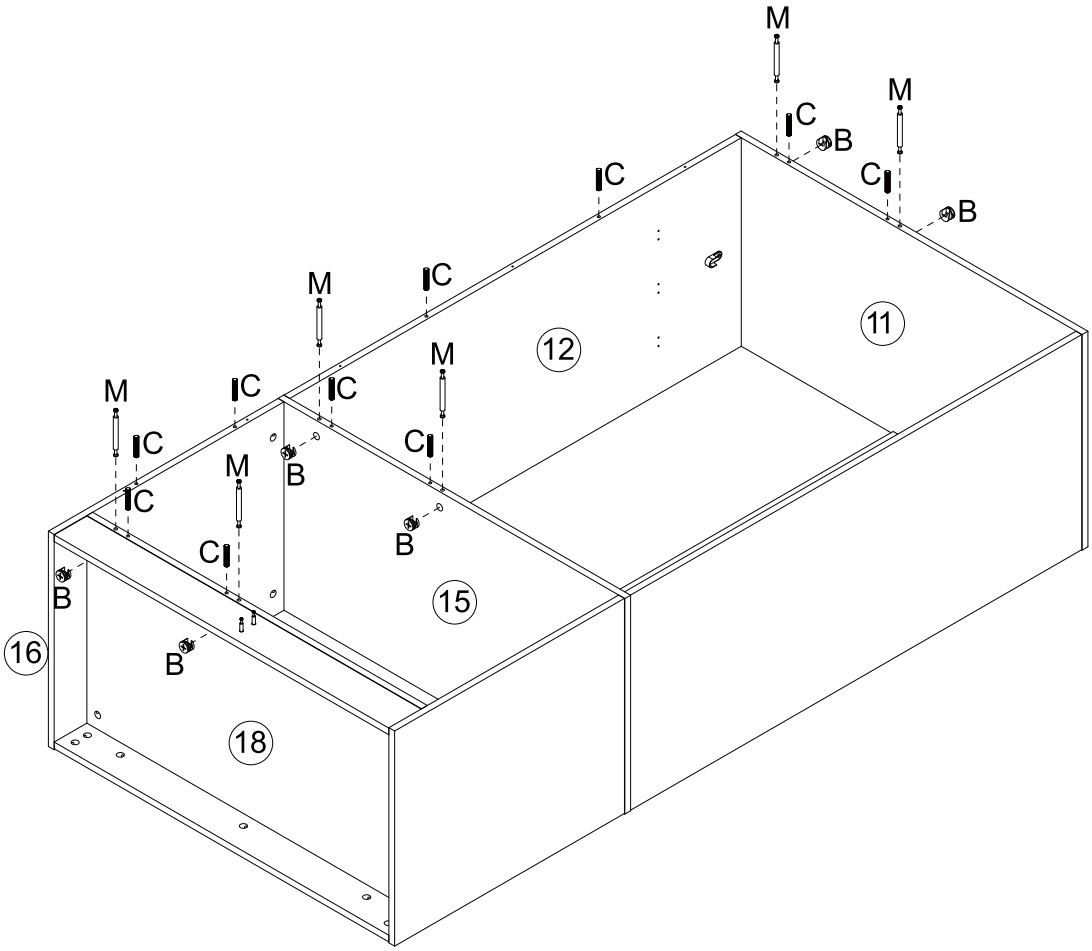

15

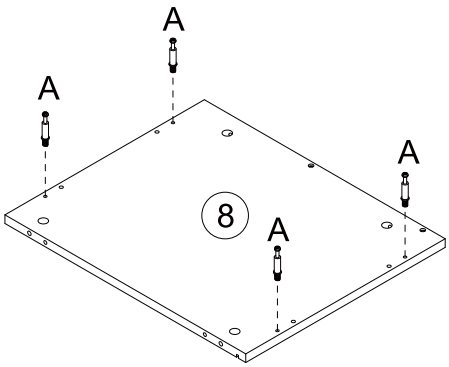

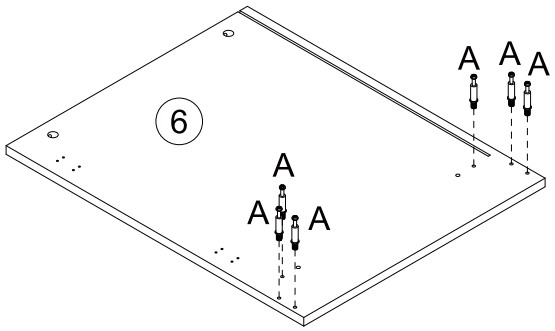

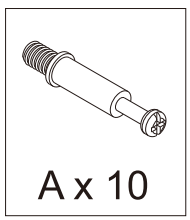

PRODUCT ASSEMBLY

16

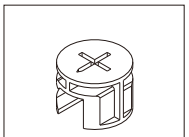

B x 4

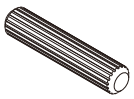

C x 4

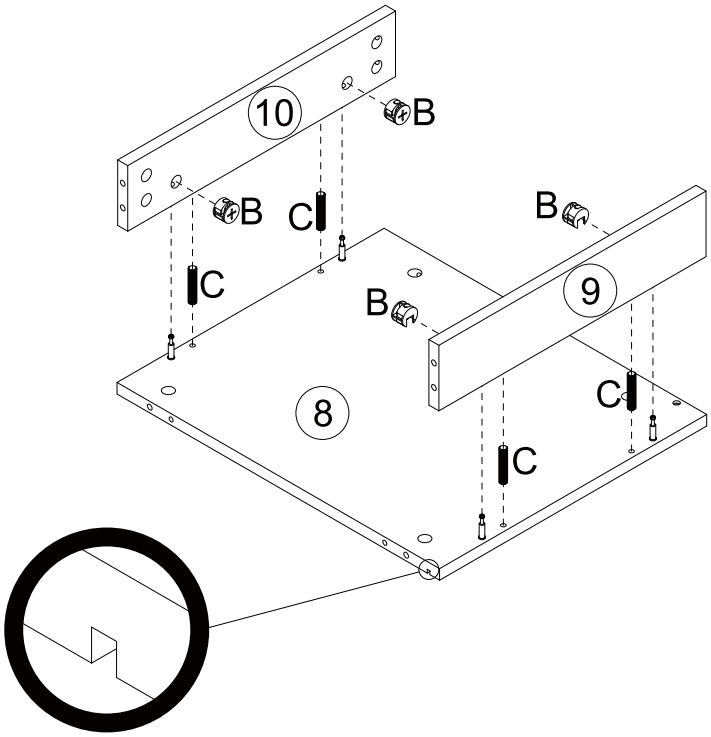

17

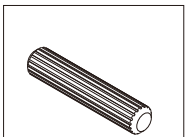

C x 2

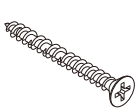

D x 2

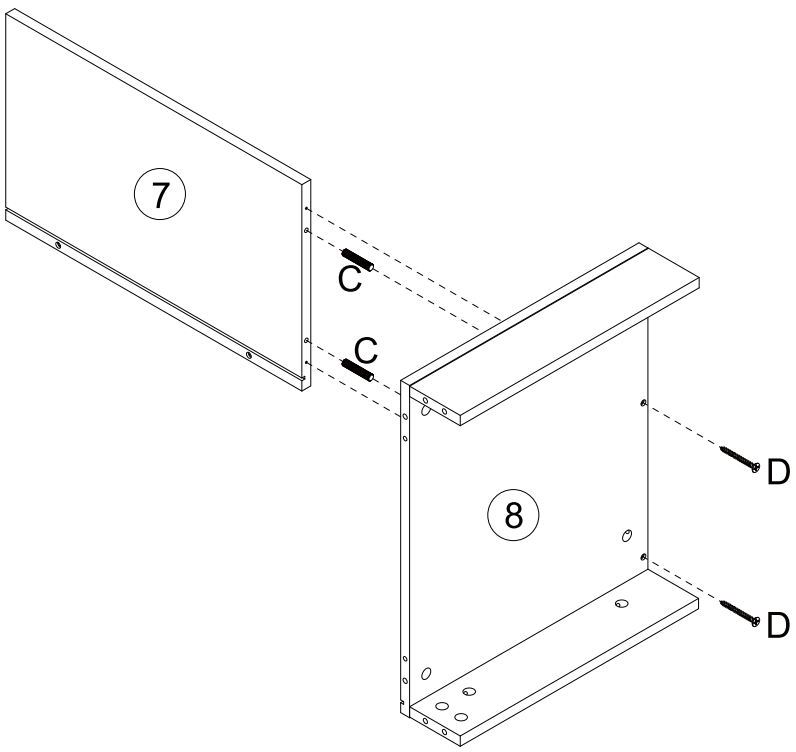

PRODUCT ASSEMBLY

18

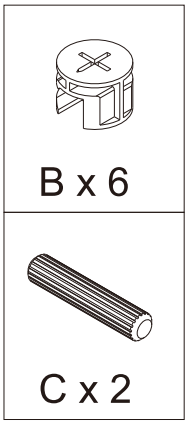

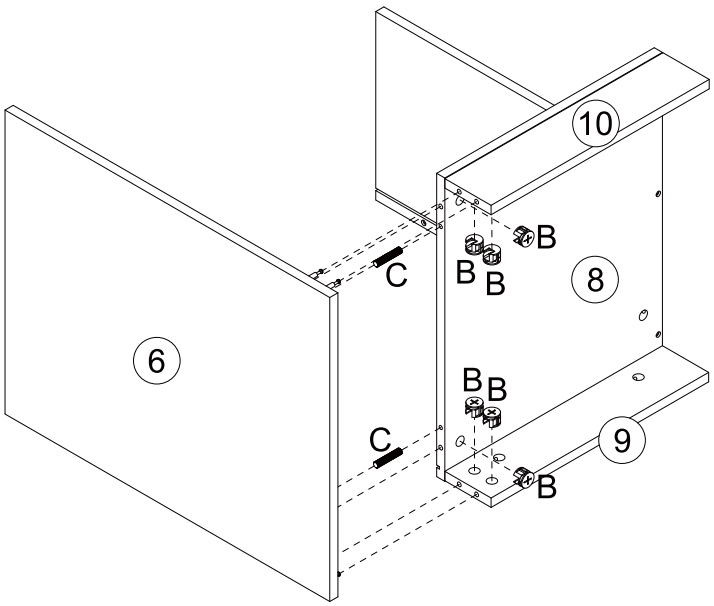

19

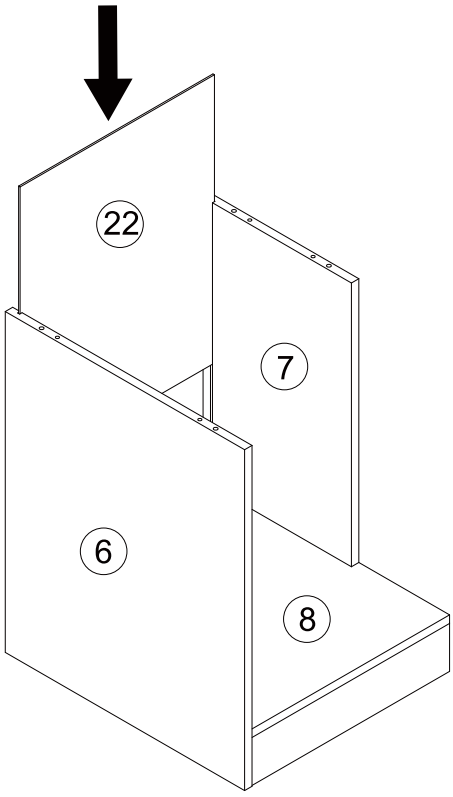

PRODUCT ASSEMBLY

20

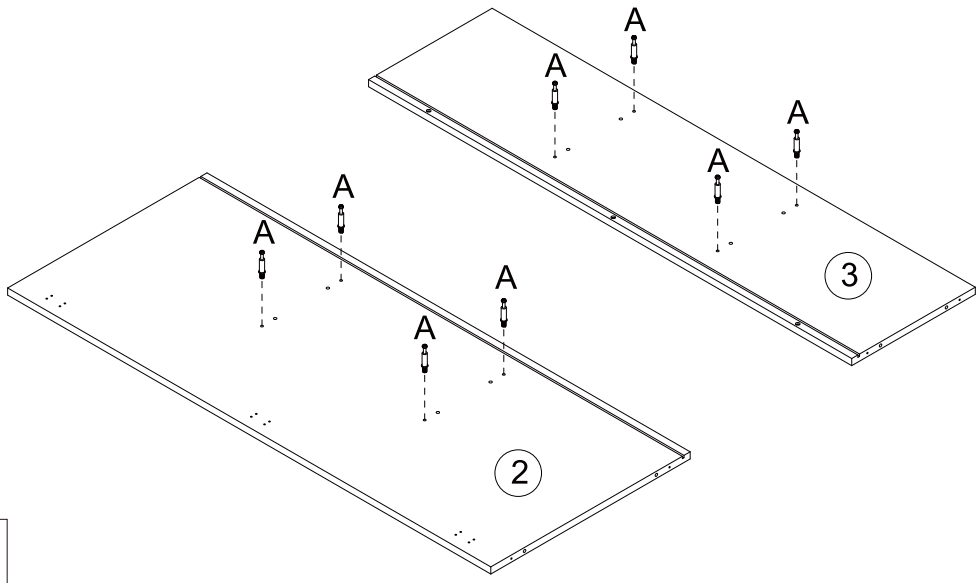

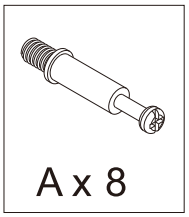

A x 8

21

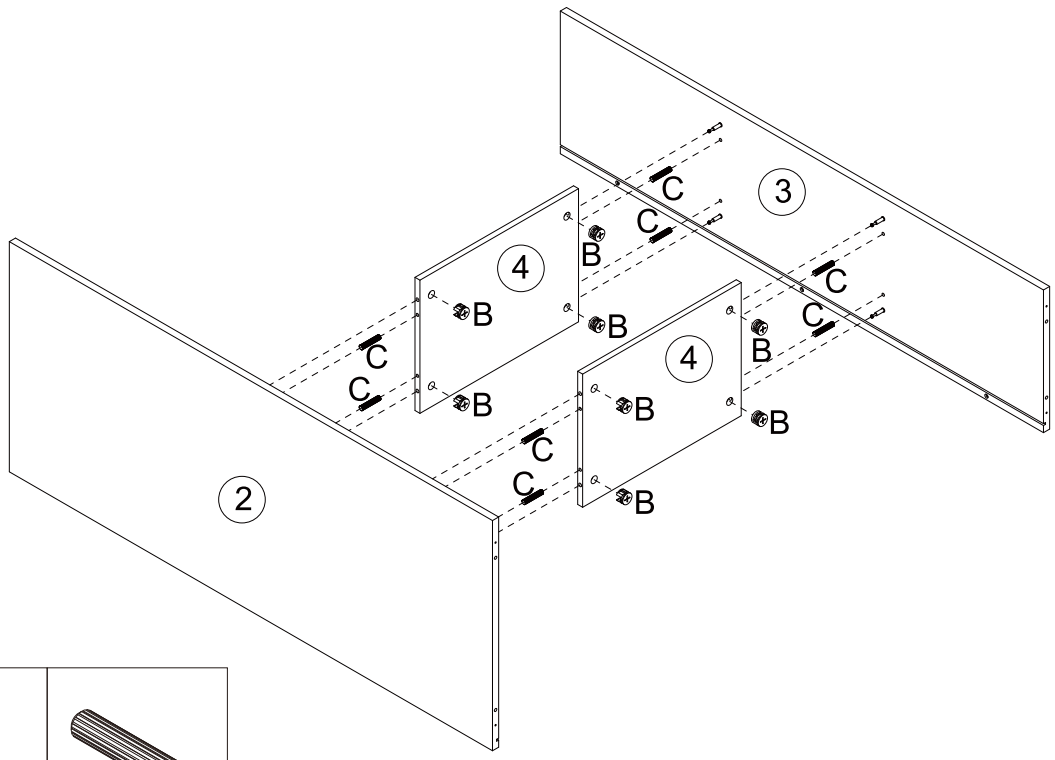

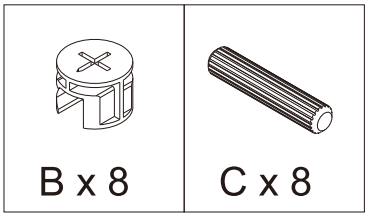

B x 8 C x 8

PRODUCT ASSEMBLY

22

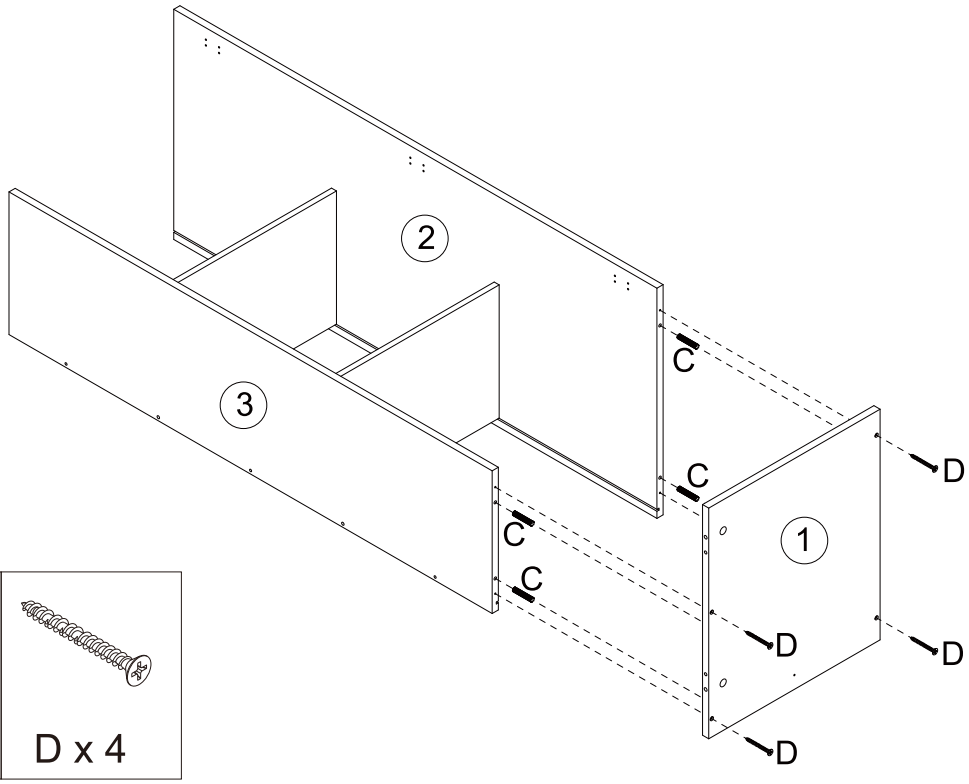

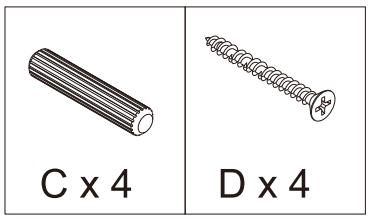

23

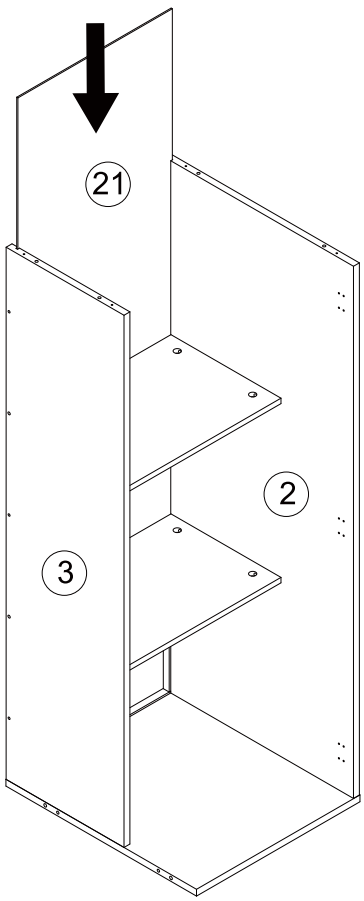

PRODUCT ASSEMBLY

24

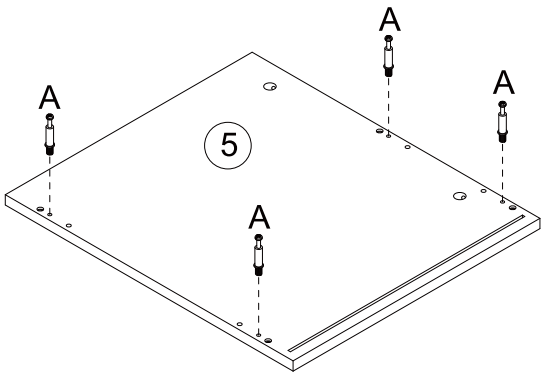

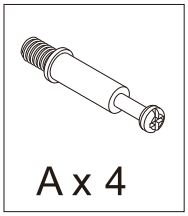

25

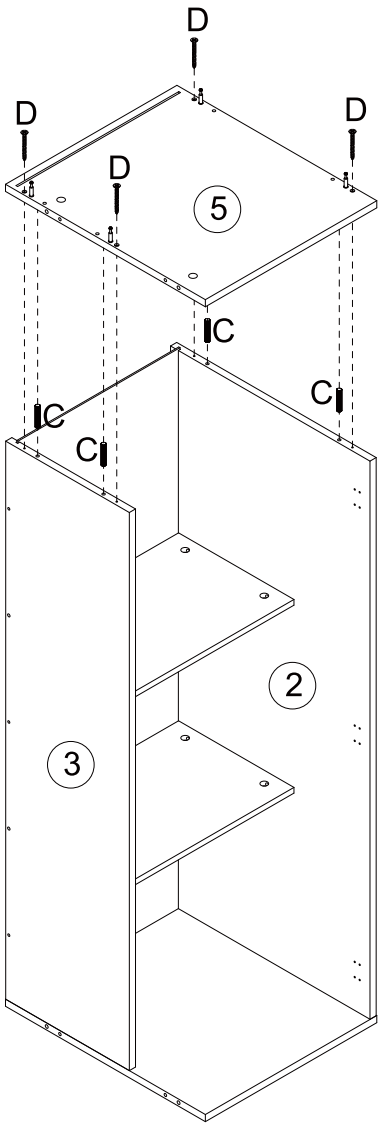

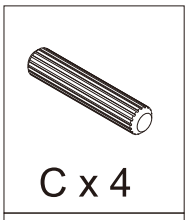

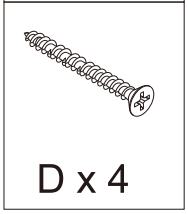

PRODUCT ASSEMBLY

26

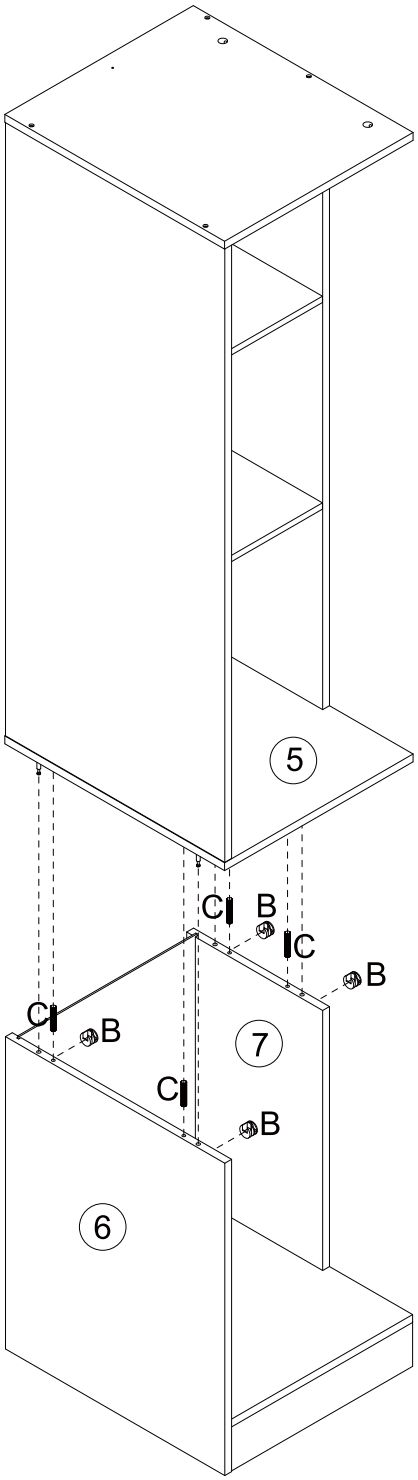

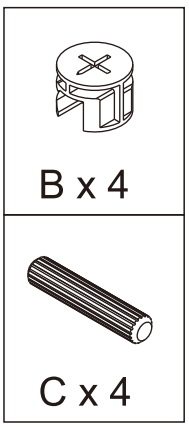

PRODUCT ASSEMBLY

27

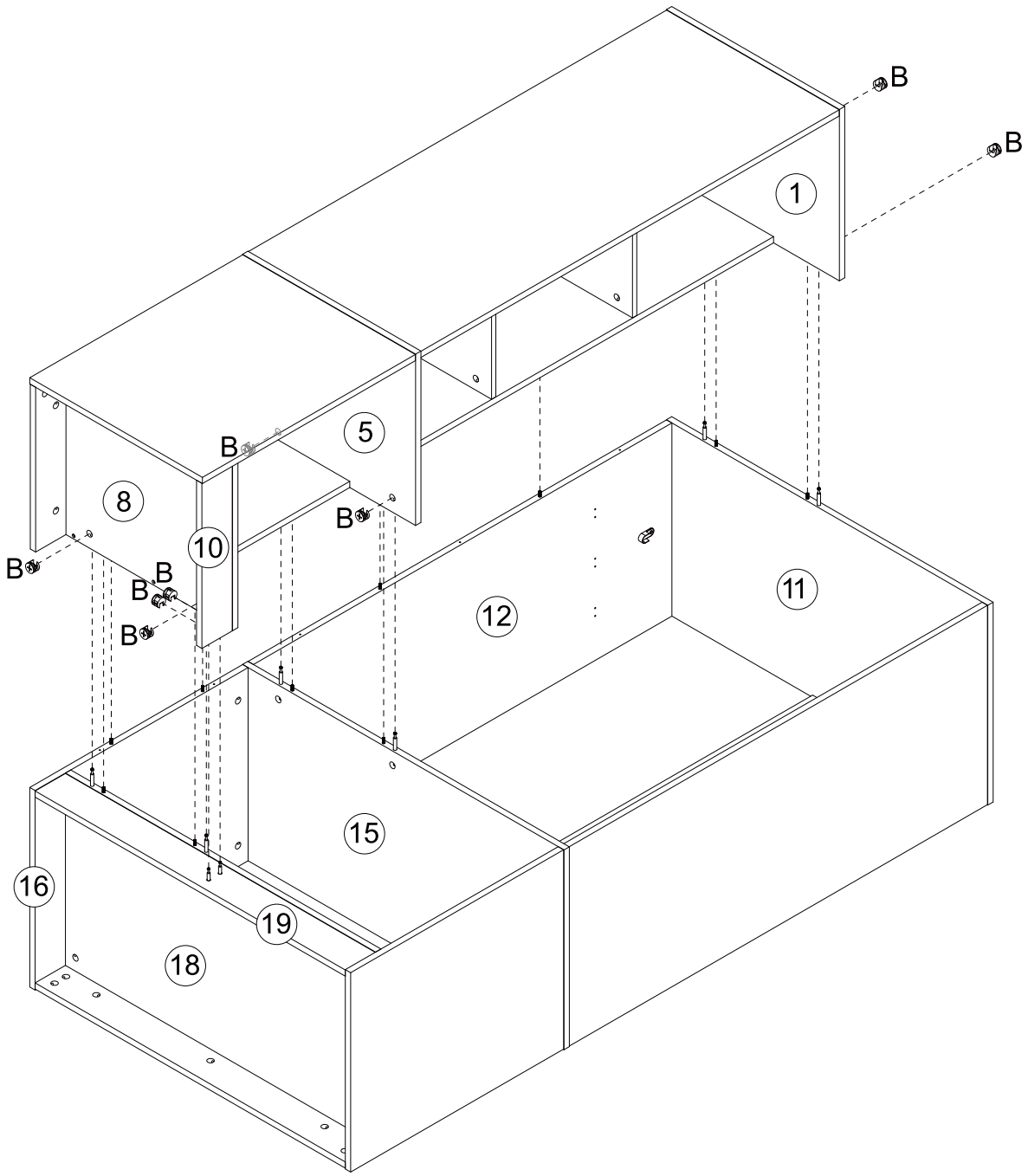



B x 8

PRODUCT ASSEMBLY

28

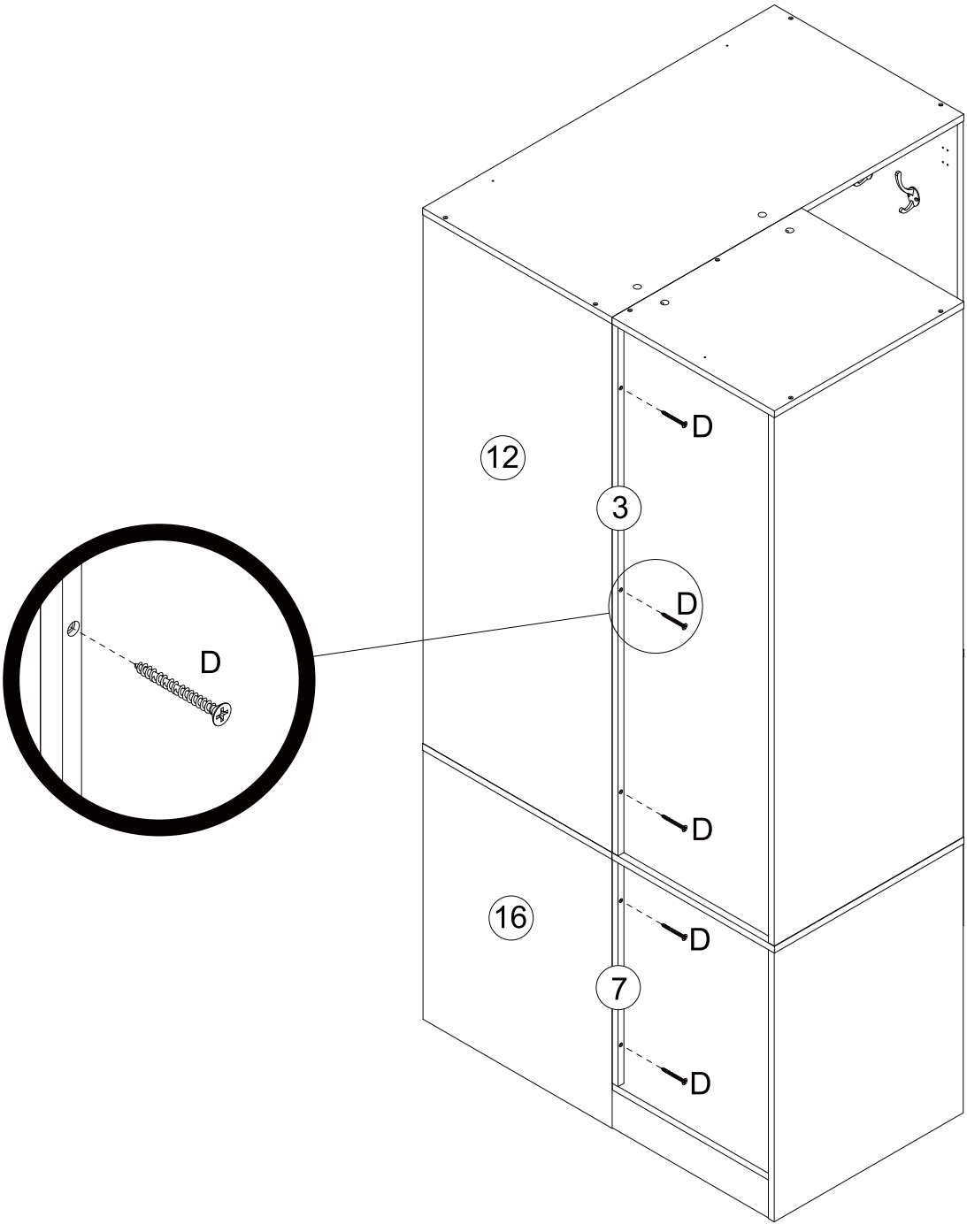

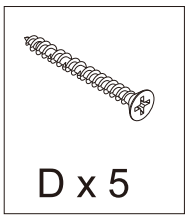

PRODUCT ASSEMBLY

29

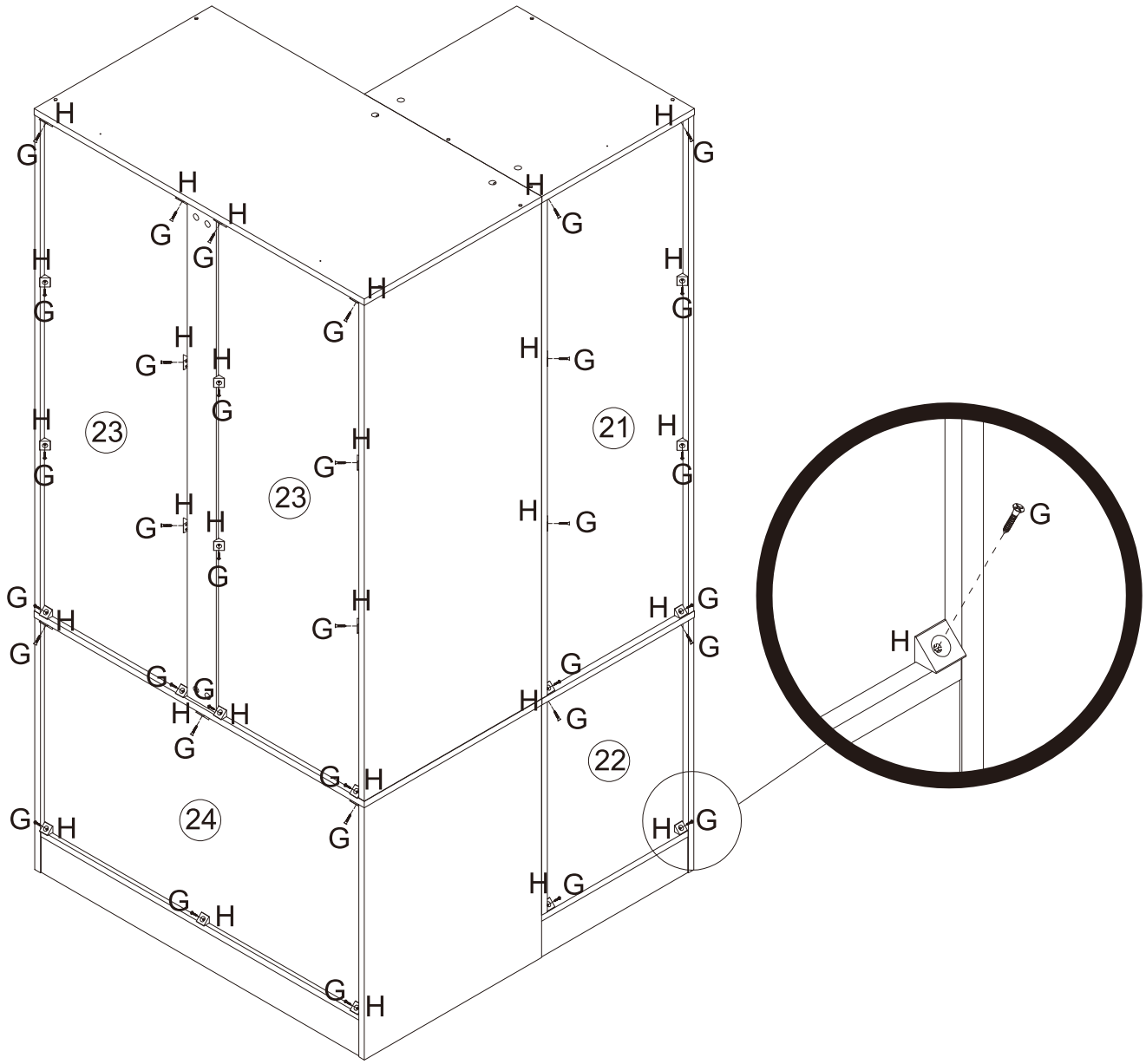

	
G x 34	H x 34

PRODUCT ASSEMBLY

30

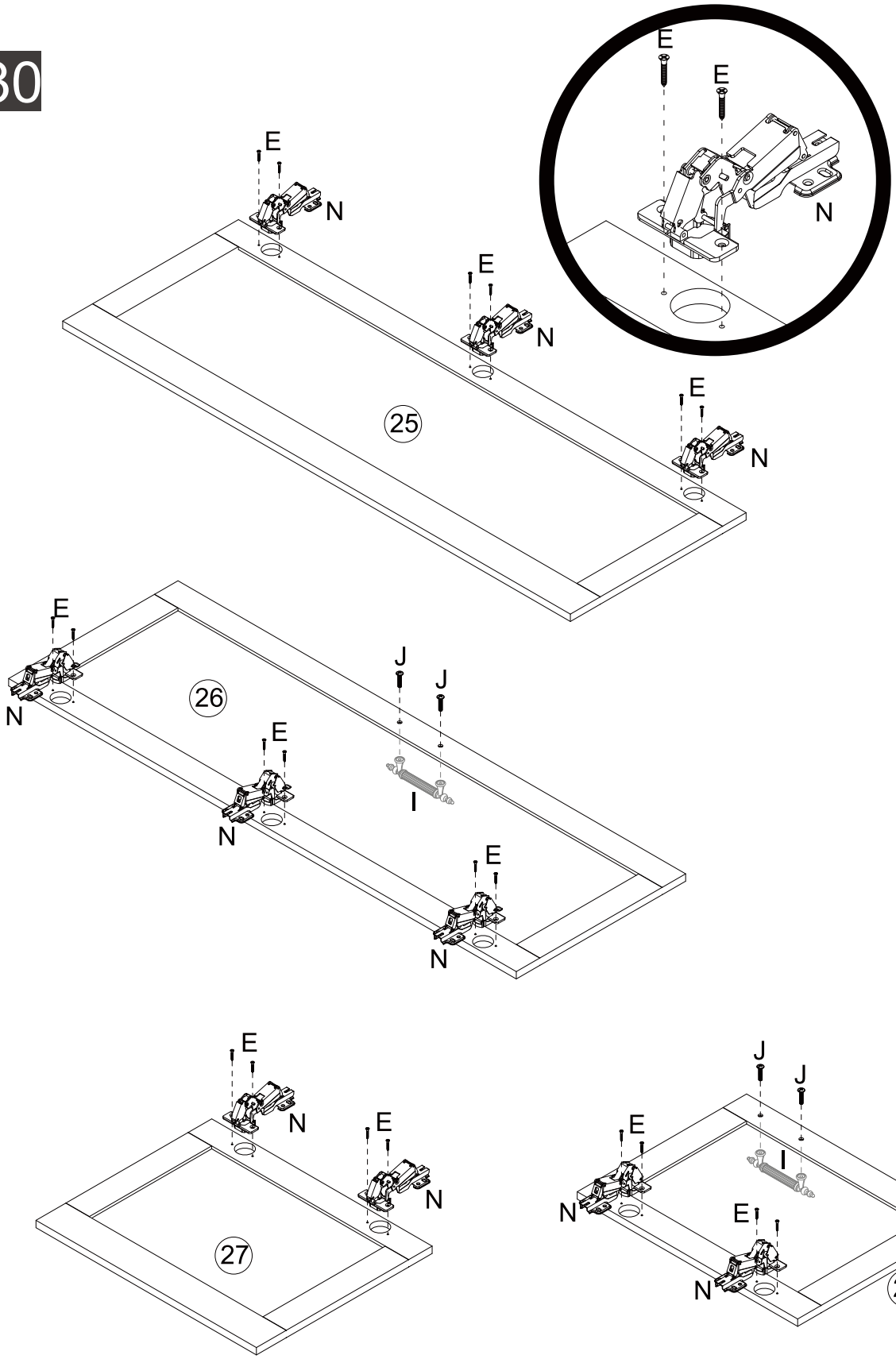

	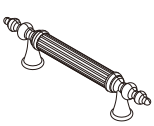		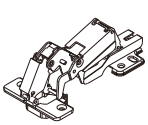
E x 20	I x 2	J x 4	N x 10

PRODUCT ASSEMBLY

31

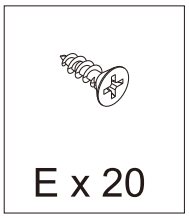

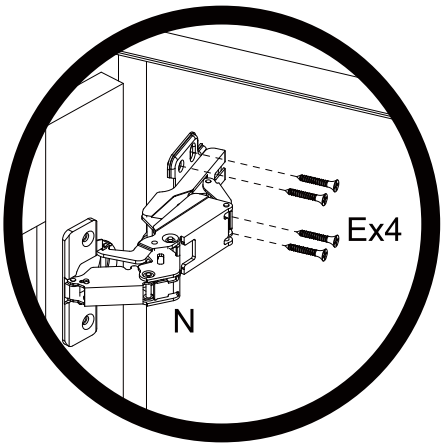

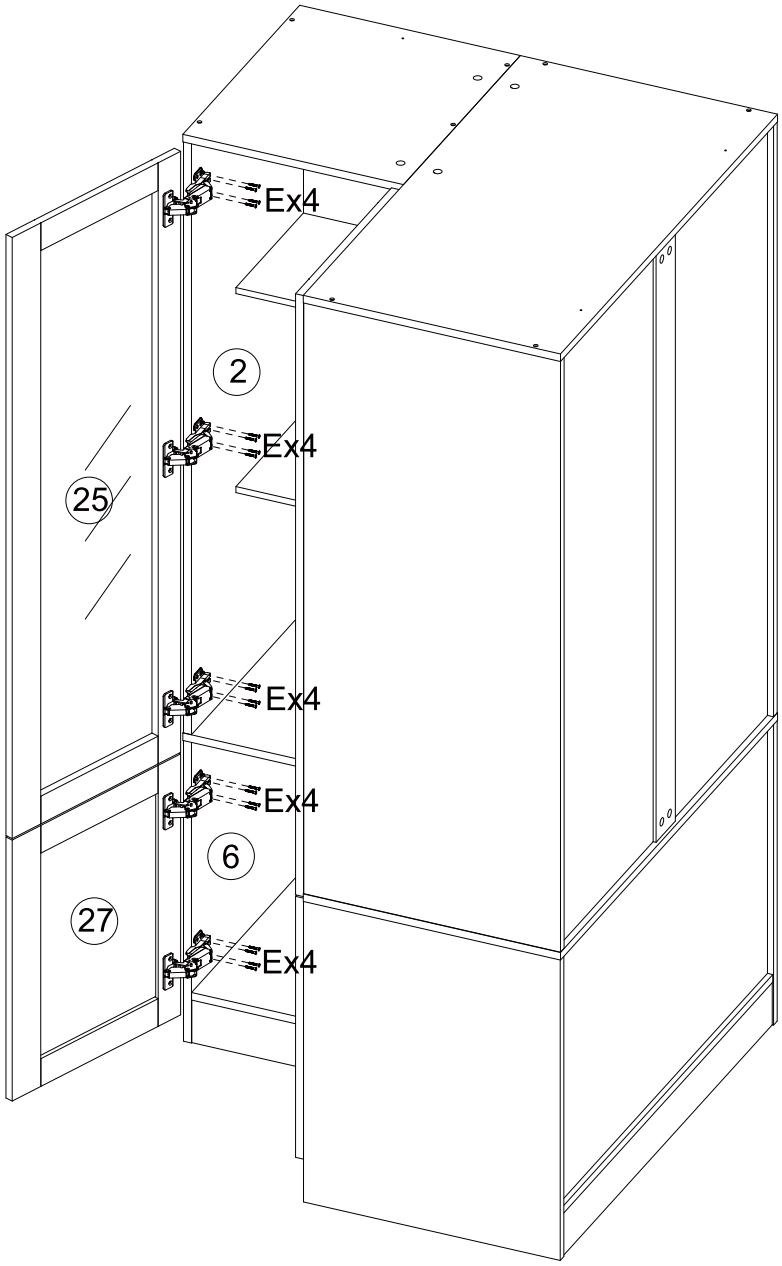

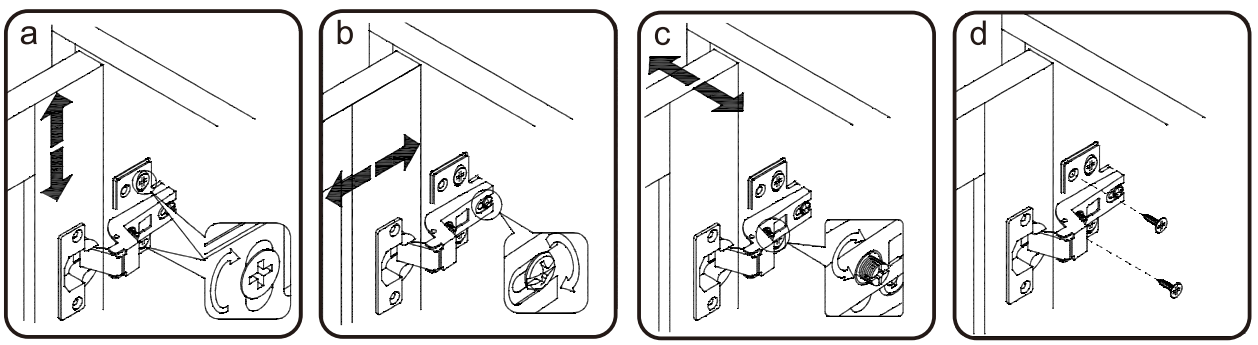

PRODUCT ASSEMBLY

32

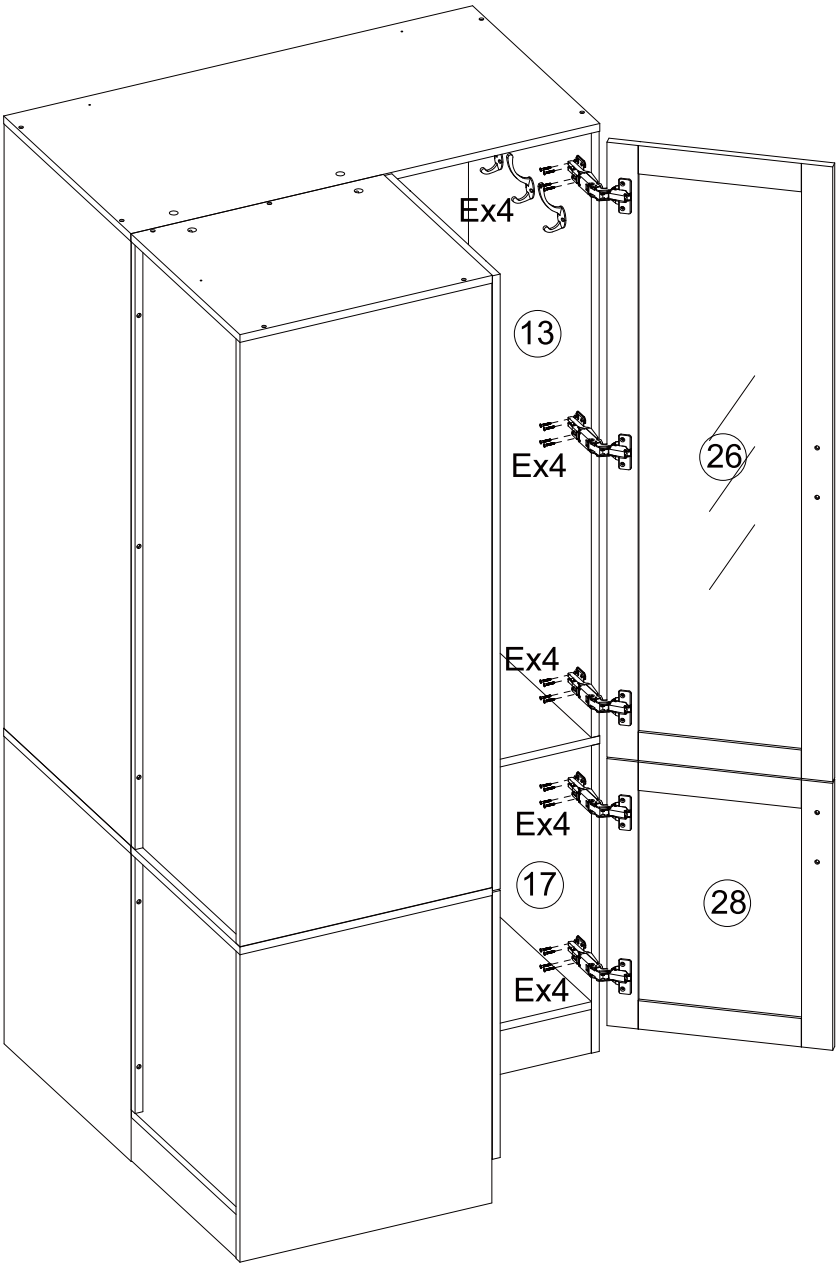

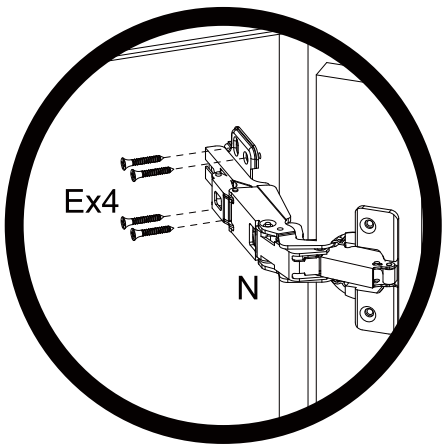

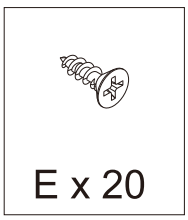

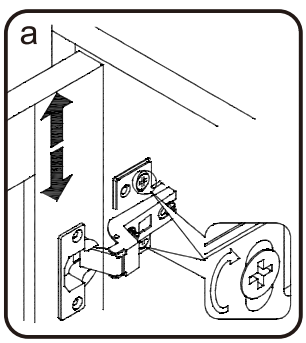

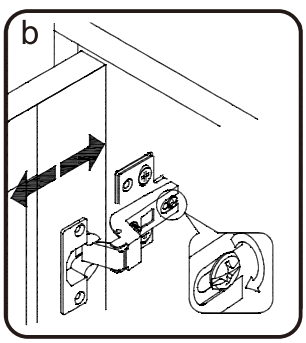

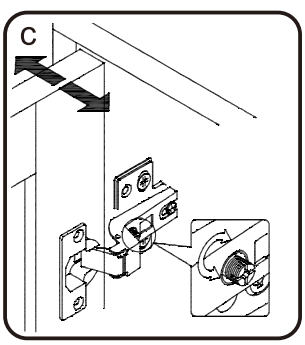

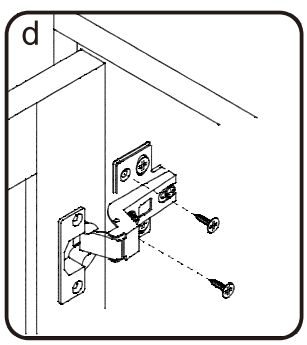

PRODUCT ASSEMBLY

33

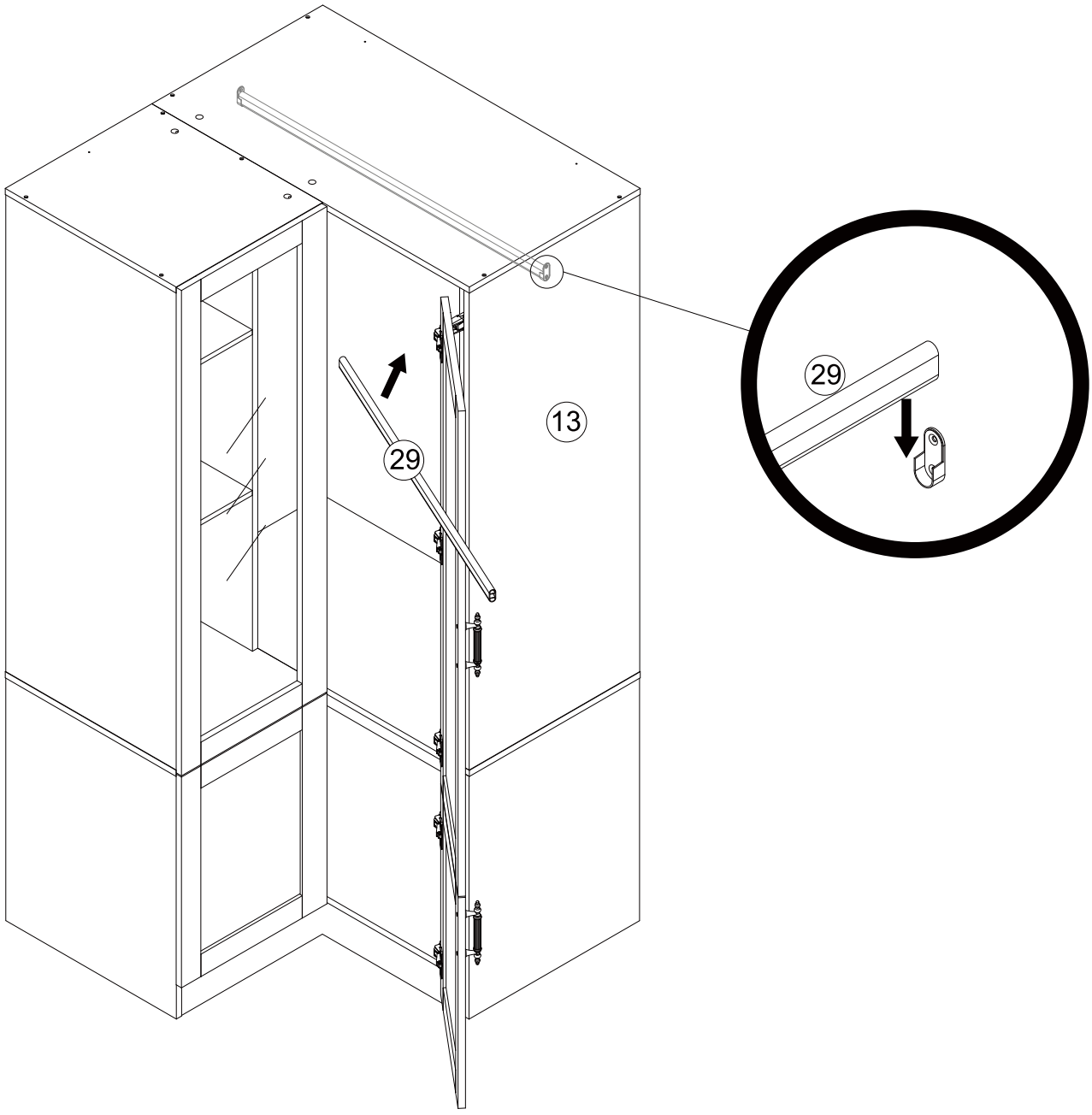

PRODUCT ASSEMBLY

34

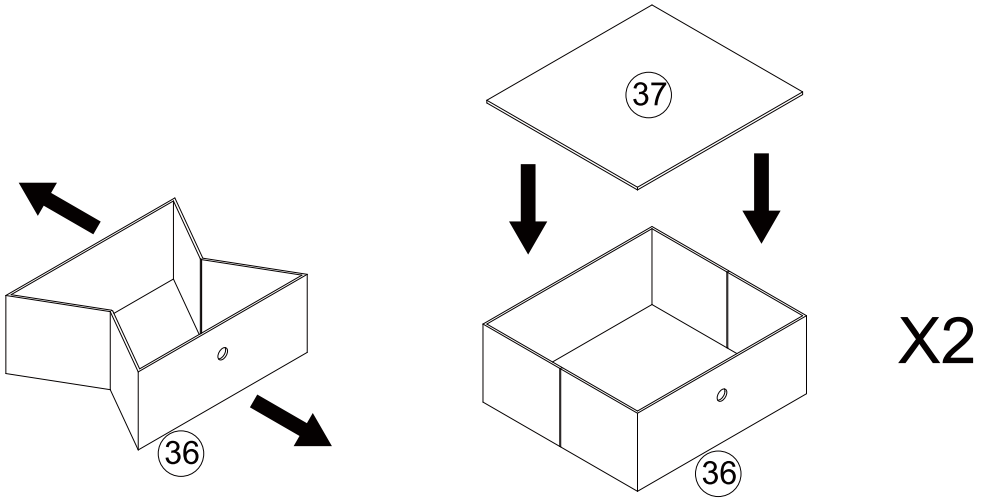

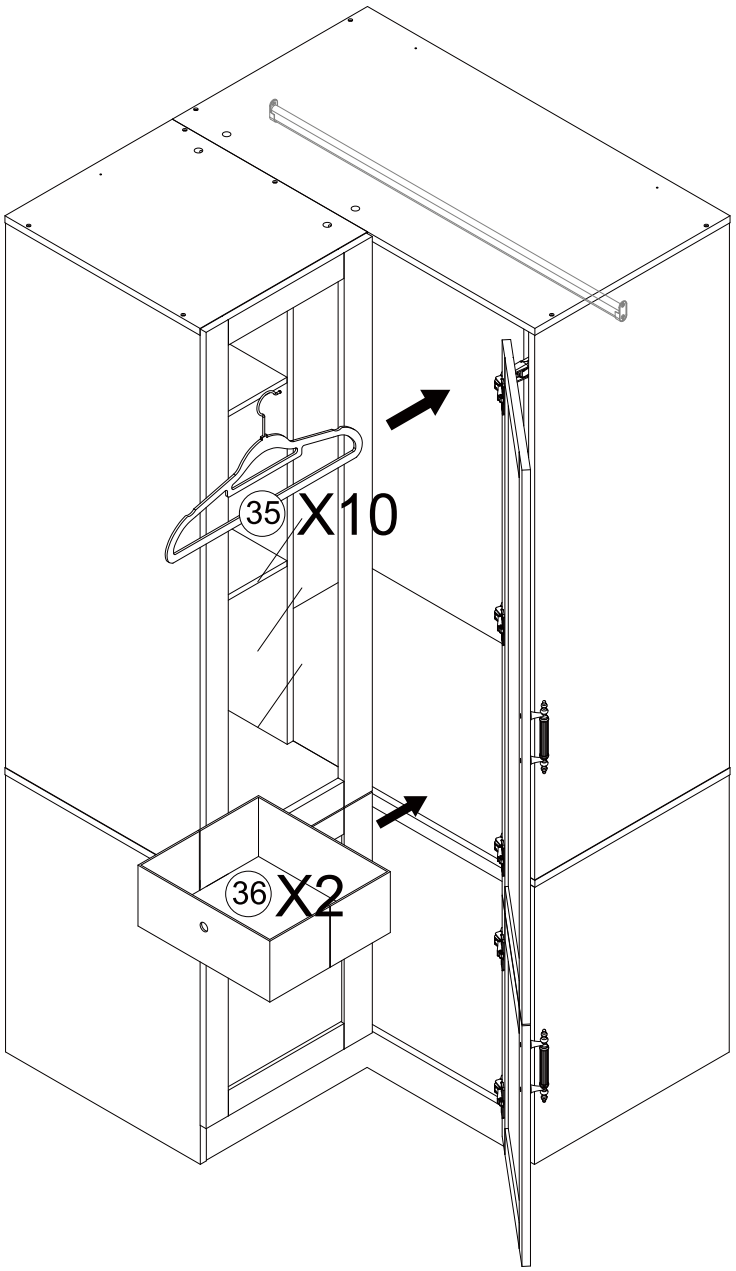

PRODUCT ASSEMBLY

35

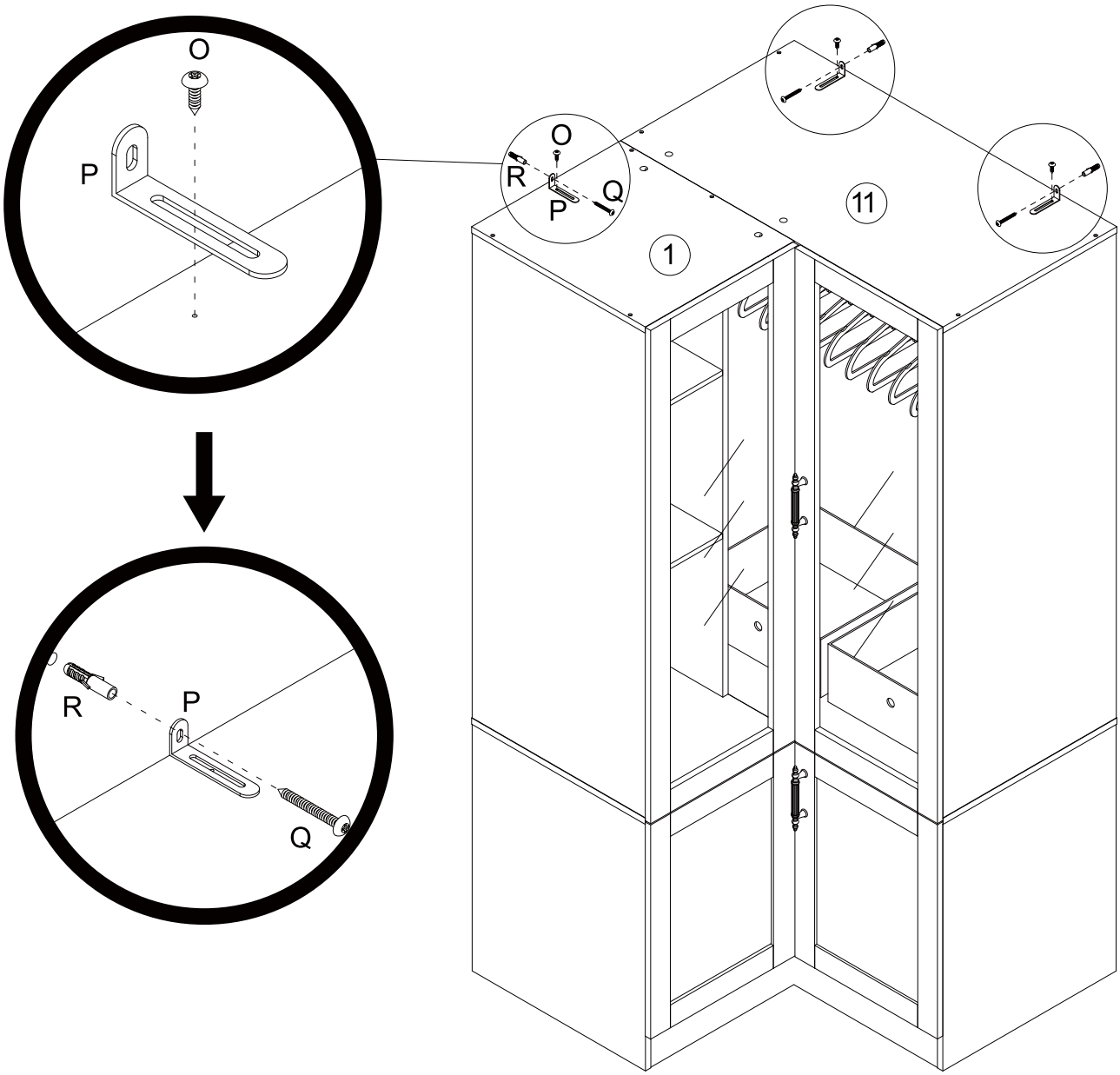

	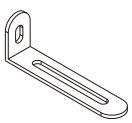	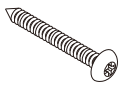	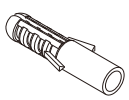
O x 3	P x 3	Q x 3	R x 3

PRODUCT ASSEMBLY

36 If there are top cabinets, please assemble them according to the following steps: Step 37 - Step 38.

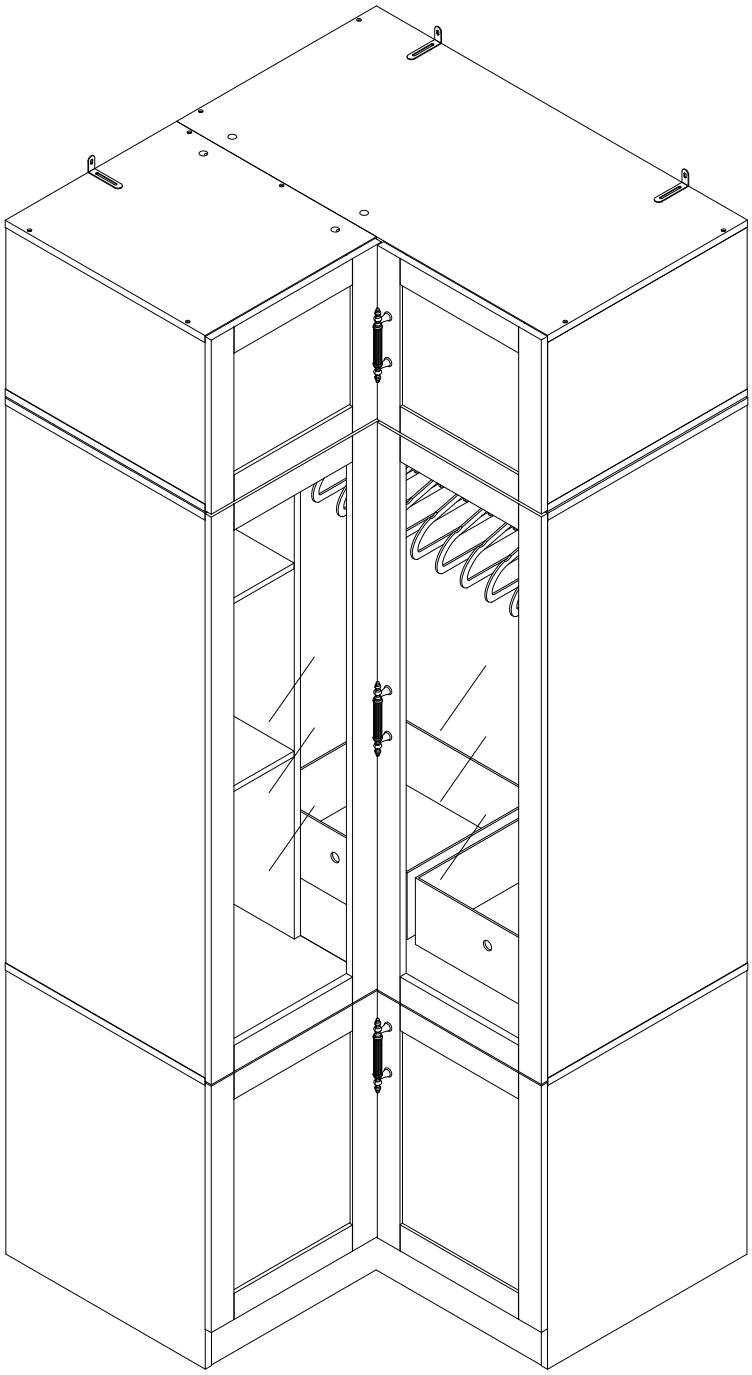

PRODUCT ASSEMBLY

37

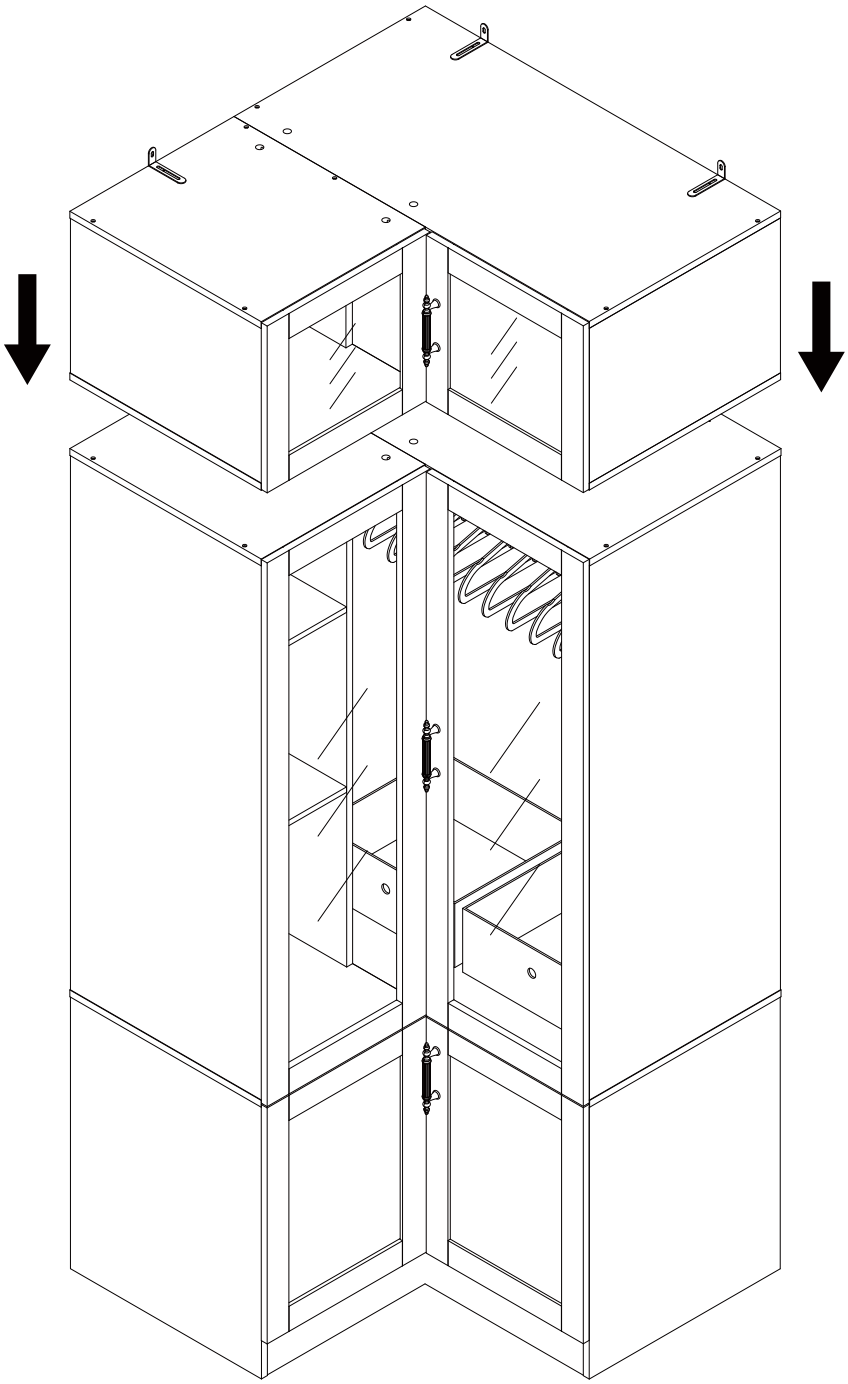

PRODUCT ASSEMBLY

38

