Cabinet

Assembly Instruction – Please keep properly for future reference.

If you find any missing boxes, damaged parts, or accessory shortages, please contact the customer service team of your purchasing channel immediately. We will resolve the issue as quickly as possible.

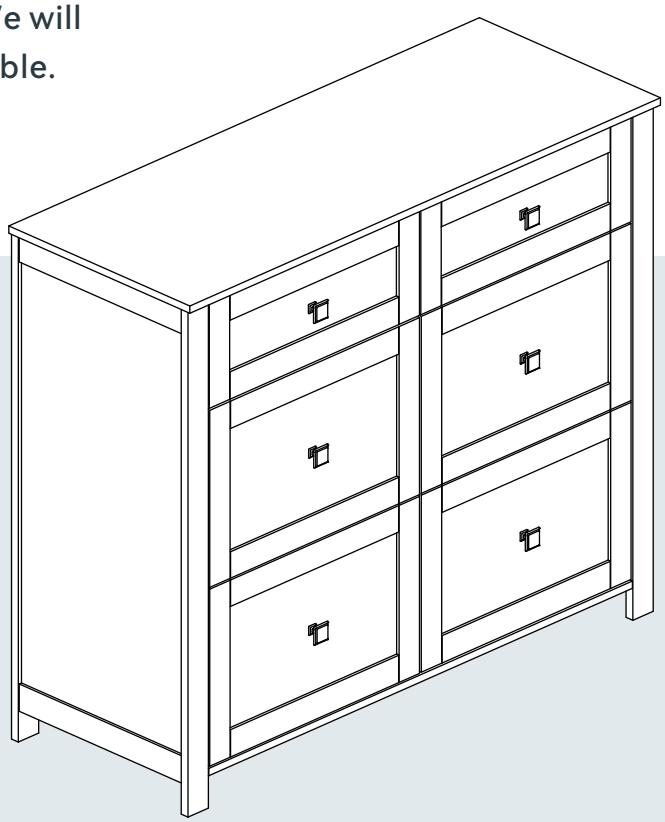

Dimensions

Width-40.9 inch
Depth-15.7 inch
Height-33.3 inch

THE FOLLOWING INFORMATION:

- Order number
- Purchase platform
- Purchase date
- Detailed description of the issue along with photos (if applicable)

Important – Please read these instructions carefully before starting the installation.

EN

Safety and Care Advice

Important – Please read these instructions fully before starting assembly

- Check you have all the components and tools listed on the following pages.
- Remove all fittings from the plastic bags and separate them into their groups.
- Keep children and animals away from the work area, small parts could choke if swallowed.
- Make sure you have enough space to layout the parts before starting.
- During assembly do not stand or put weight on the product, this could cause damage.
- Assemble the item as close to its final position (in the same room) as possible.
- Assemble on a soft level surface to avoid damaging the unit or your floor.
- Parts of the assembly will be easier with 2 people.

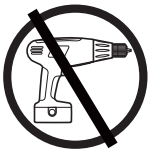

- To reduce the likelihood of damaging your product please ensure that your power drill is set on a low torque setting.

Care and maintenance

- Only clean using a damp cloth and mild detergent, do no use bleach or abrasive cleaners.
- From time to time check that there are no loose screws on this unit.
- This product should not be discarded with household waste. Take to your local authority waste disposal centre.

Handy Hints

- Assemble all parts and bolts loosely during assembly, only once the product is comKlete should you fully tighten the bolts
- Regularly check and ensure that all bolts and fittings are tightened properly .

WARNING
In order to help prevent overturning – please follow these instructions

To help prevent product toppling over please follow the below steps:-

Use the anti tip stap or wall fixing method provided (if applicable)
Do not allow children to climb or hang on the furniture
Do not open more than one drawer at a time
Do not place heavy items in the top drawers
Do not place heavy items on top of the furniture, unless the furniture has been designed for this purpose

Please note that only the anti tip strap is provided.
You will need to provide wall plugs and screws applicable for your wall type

CUSTOMER SERVICE GUIDE

Thank you for choosing our product! We are committed to providing you with excellent service. If you find any missing parts, damaged packaging, or product damage after receiving all packages, please follow the steps below to quickly contact our customer service team. We will do our best to resolve your issue.

1. Missing Parts

Verify Parts:

1. Refer to the “Parts List” in the manual to verify the name, specifications, and quantity of the missing parts.
2. Take a clear photo of the parts list and mark the missing parts with detailed information, e.g., “Missing 5 pieces of M6x30mm screws.”

Contact Us:

· By Email:
Send an email with the subject line “Missing Parts Issue.” Include the following in the email:
· A description of the missing parts and a photo of the parts list.
· Order details (order number, purchase platform, purchase date).

2. Product or Packaging Damage

If it affects normal use:

Steps:

1. Take clear photos or videos showing the damaged parts and the extent of the damage (multi-angle shots are recommended).
2. Email the photos/videos along with other details with the subject line “Product Damage Issue.”

Resolution:

After verification, we will arrange for a replacement part, product exchange, or refund as quickly as possible.

If it does not affect normal use:

Steps:

1. Contact our customer service team
2. Provide a description of the damage and include relevant photos or videos.

Resolution:

We will provide repair guidance or an appropriate compensation plan based on the specific situation.

Contact Us:

· Customer Service Email

Helpful Tips

To process your issue efficiently, please prepare the following information:
· Order details (order number, purchase platform, purchase date).
· Clear photos or videos.
· We are committed to providing quick and professional solutions, no matter the size of the issue, to ensure your satisfaction.
Thank you for your trust and support! We hope you enjoy using our product!

Parts List - Fittings

Please check you have all the fittings listed below

Note: The quantities below are the correct amount to complete the assembly. In some cases more fittings may be supplied are required.

A  6x30mm Wooden Dowel x 32	B 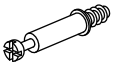 6x35mm Cam Bolt x 40	C  Cam Lock x 40
D 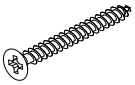 4x40mm Screw x 4	E 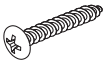 4x30mm Screw x 12	F 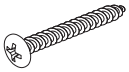 4x35mm Screw x 2
G  4x12mm Screw x 12	H  3x12mm Screw x 24	I  2.5x12mm Screw x 16
J 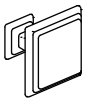 x 6  4x12mm	K  x 2	L 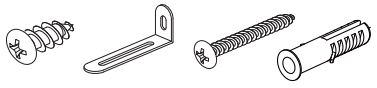 x 2
M 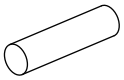 x 4	N 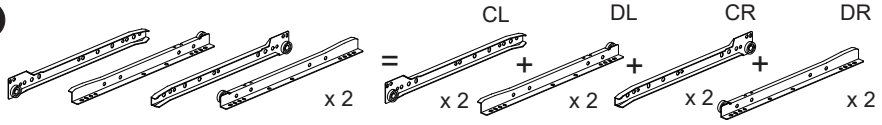	
O 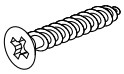 4x35mm Screw x 10		

Tools required



Phllips screwdriver
(medium & large)

Ruler - Use this ruler to help correctly identify the screws mm

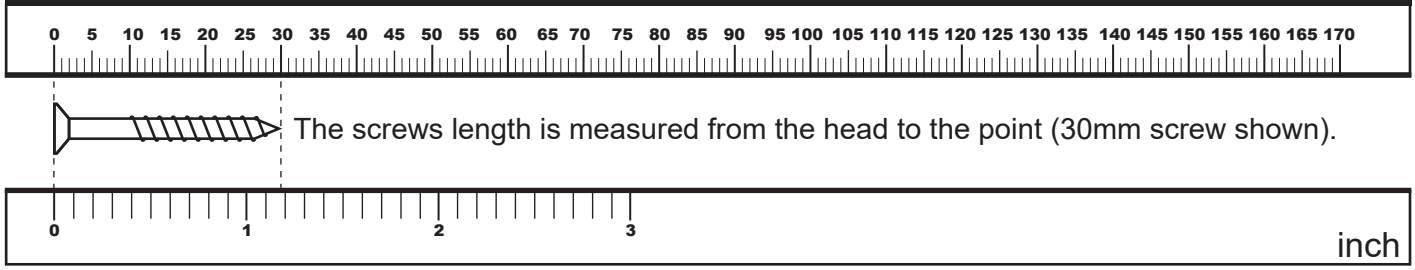

Using Camlocks

Step 1

Connect the male camlock as directed in the assembly instructions using a screwdriver.

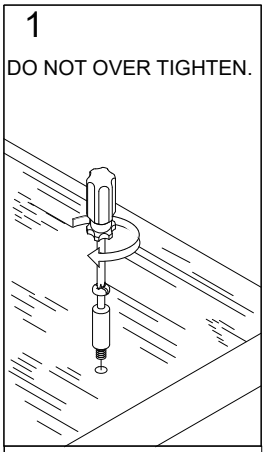

Step 2

Push the male camlock into the entry hole.

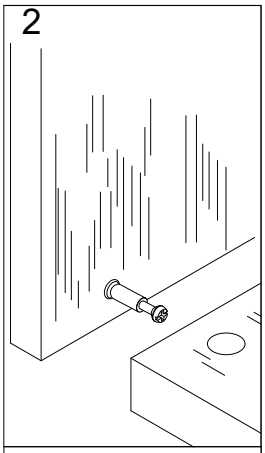

Step 3

Insert the female camlock as shown in the instructions.

Note: ensure that the arrow on the top of the camlock points towards the entry hole for the male camlock.

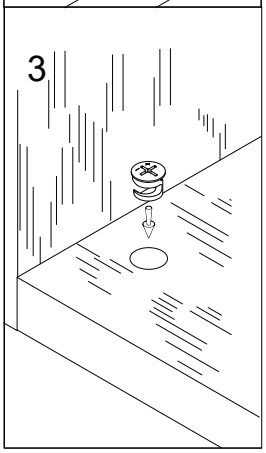

Step 4

Turn the female camlock clockwise with a screwdriver.

You should feel a click when the camlock is locked in place.

The joint is now secure.

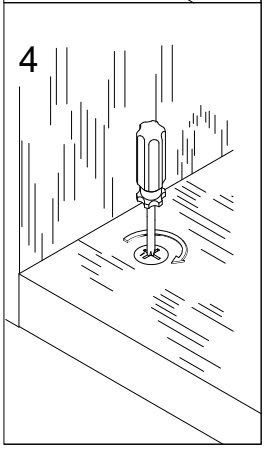

Parts List - Panels

Please check you have all the panels listed below

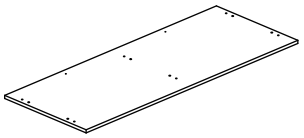

1 (1040x400x12mm x1)

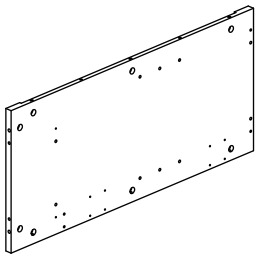

2 (785x360x17mm x1)

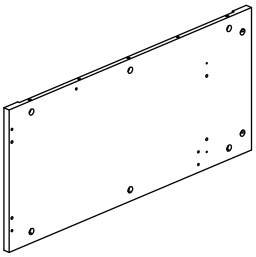

3 (785x360x17mm x1)

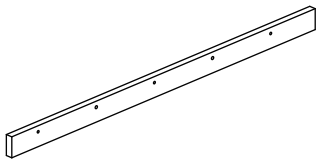

4 (835x45x15mm x2)

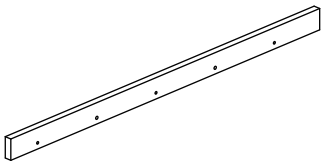

5 (835x45x15mm x1)

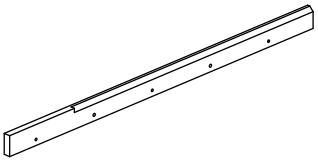

6 (835x45x15mm x1)

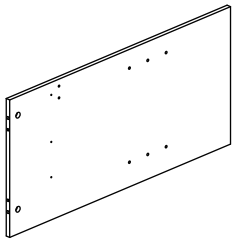

7 (768x374x12mm x1)

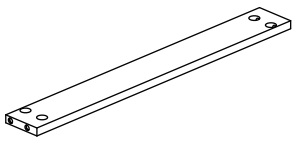

8 (489x60x12mm x1)

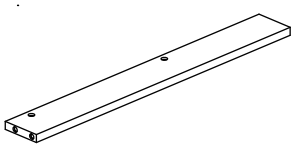

9 (489x60x12mm x1)

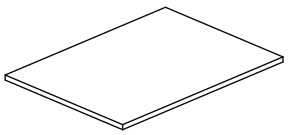

10 (487x357x12mm x1)

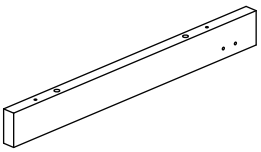

11 (362x35x15mm x1)

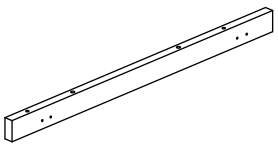

12 (552x32x15mm x1)

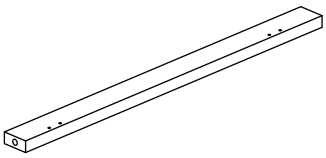

13 (489x35x15mm x1)

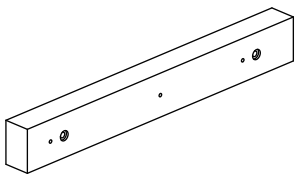

14 (308x40x25mm x2)

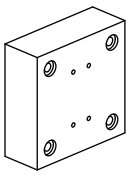

15 (68x68x25mm x2)

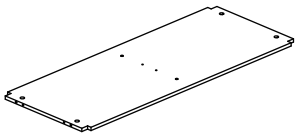

16 (990x391x12mm x1)

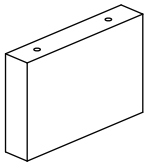

17 (100x55x25mm x1)

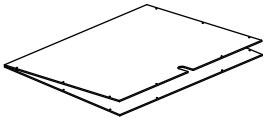

18 (792x489x3mm x1)

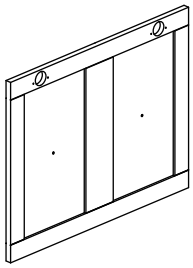

19 (583x464x15mm x1)

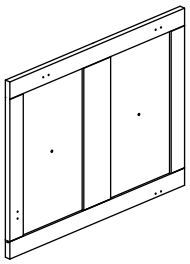

20(583x464x15mm x1)

Parts List - Panels

Please check you have all the panels listed below

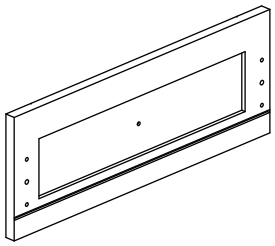

21 (464x175x15mm x1)

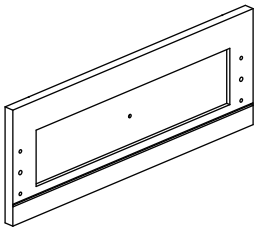

22(464x175x15mm x1)

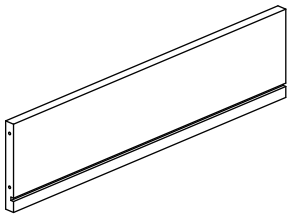

23 (415x105x12mm x2)

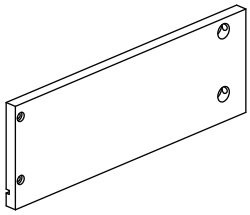

24(300x105x12mm x2)

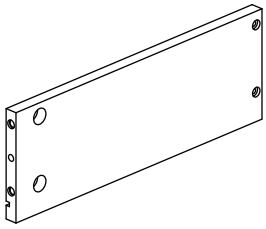

25 (300x105x12mm x2)

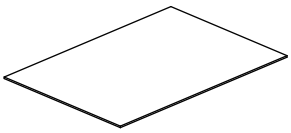

26(422x295x3mm x2)

Assembly Instructions

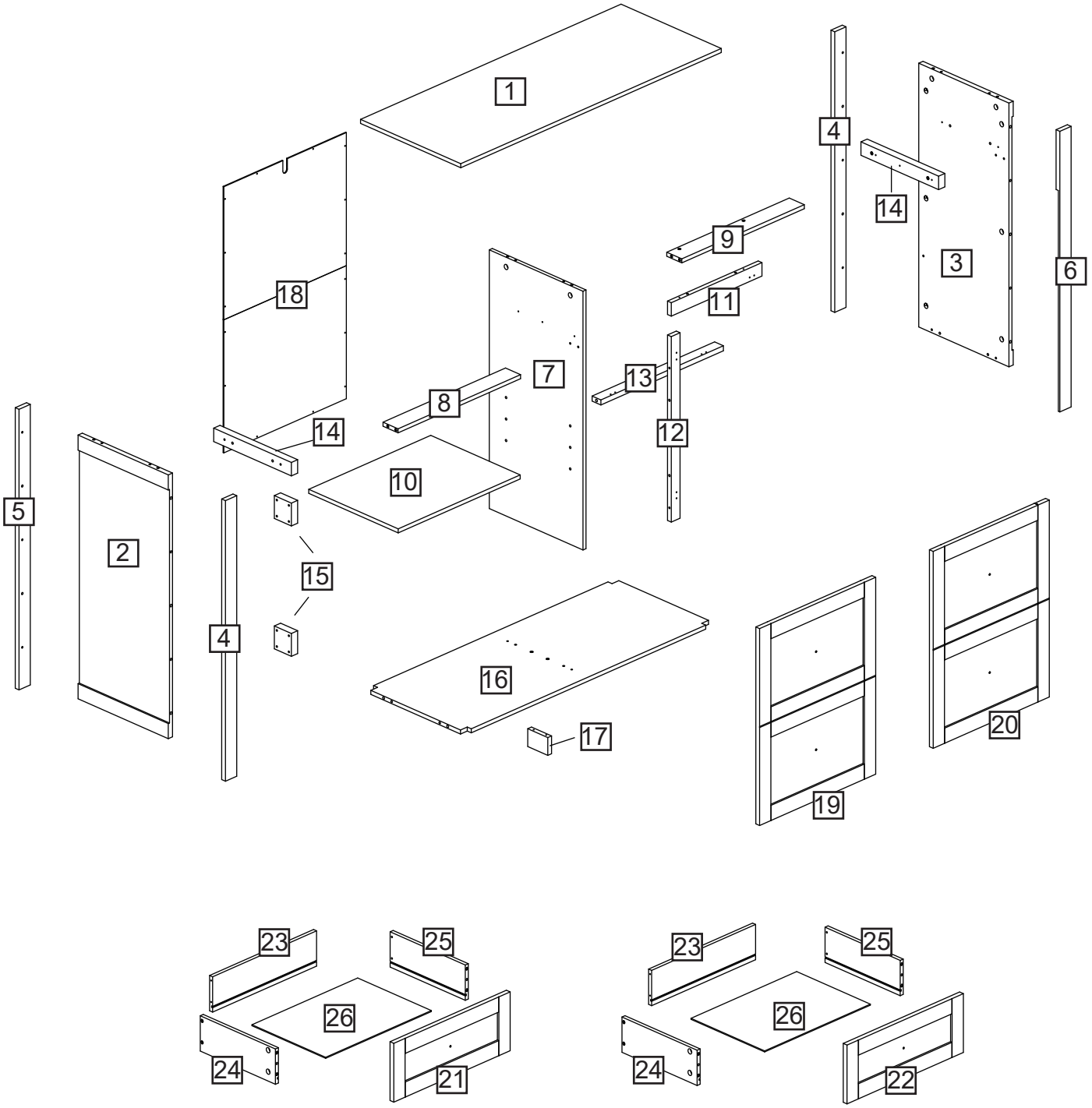

Assembly Instructions

Step 1

CAM-LOCK
Tighten until shoulder is flush with panel.Do not overtighten or undertighten(see example below)

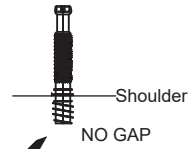

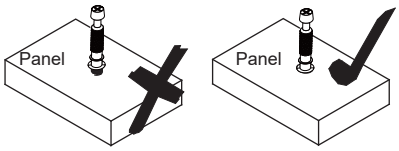

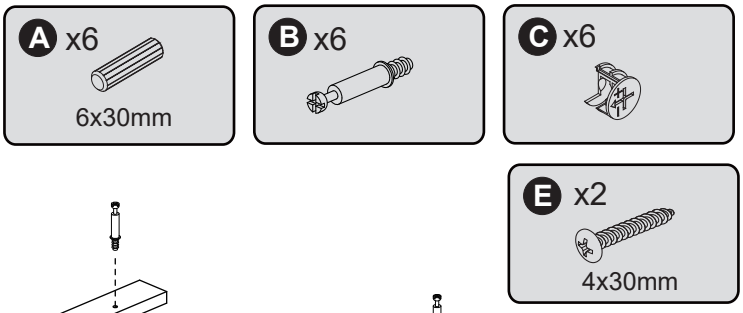

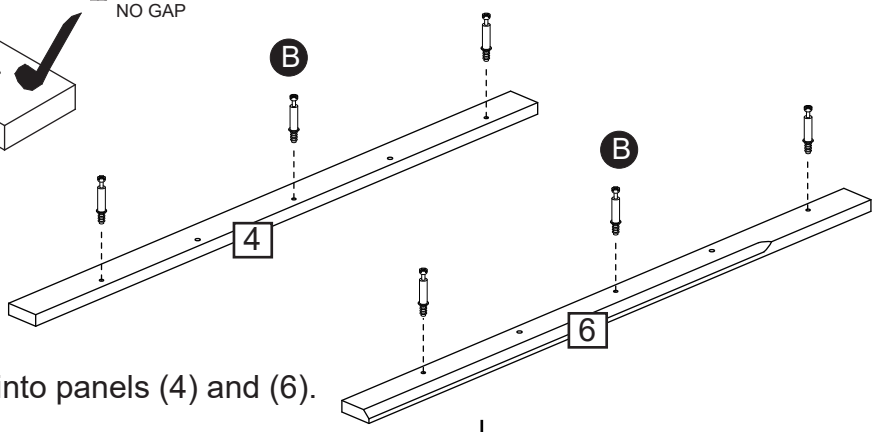

Screw cam bolts (B) into panels (4) and (6).

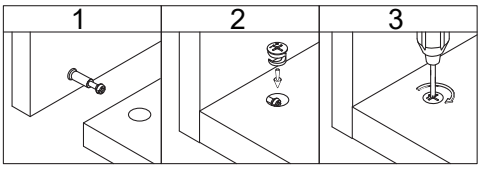

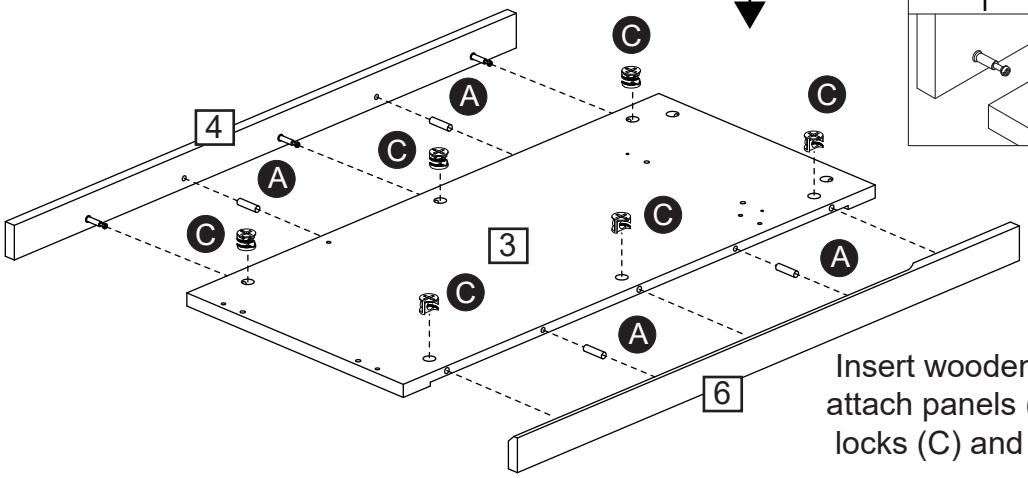

Insert wooden dowels (A) into panel (3), attach panels (4) and (6), insert cam locks (C) and tighten.

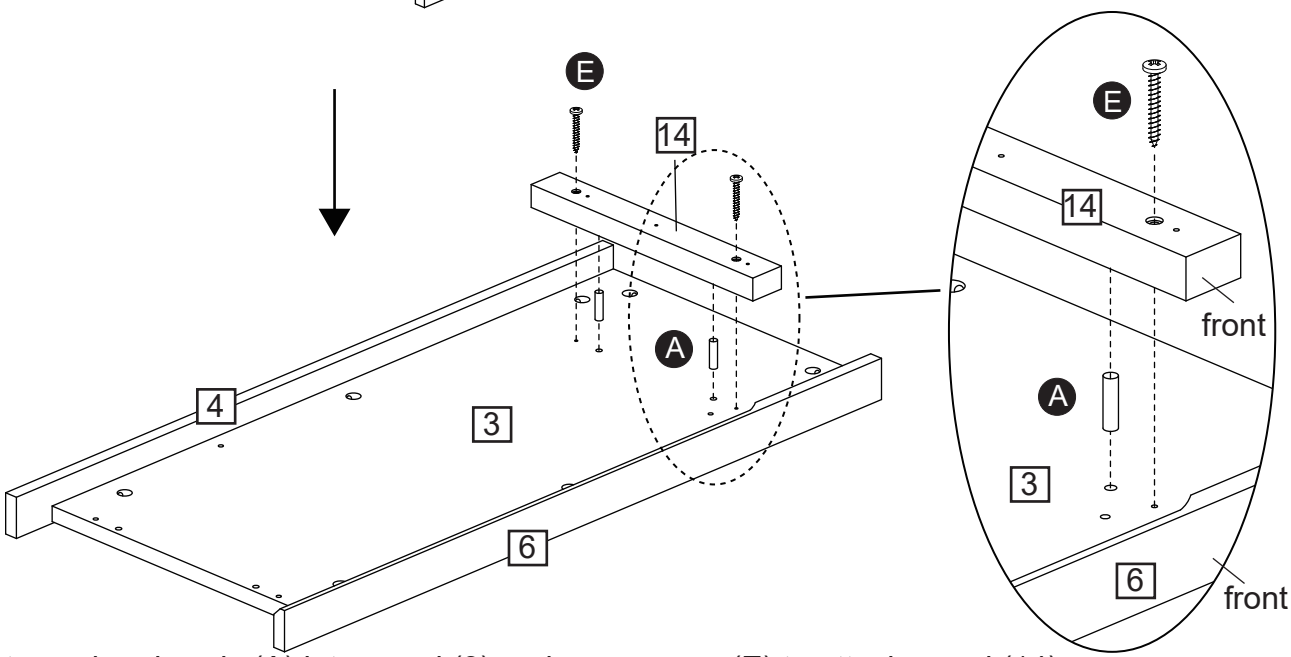

Insert wooden dowels (A) into panel (3) and use screws (E) to attach panel (14).

Assembly Instructions

Step 2

CAM-LOCK
Tighten until shoulder is flush
with panel.Do not overtighten
or undertighten(see example below)

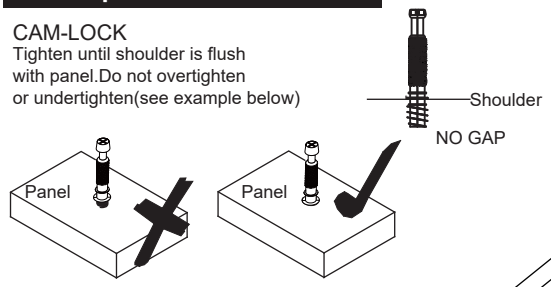

Screw cam bolts (B) into panel (3).Install slide rail (CR) onto panel (14) using screws (H), following the hole positions shown.

Step 3

CAM-LOCK
Tighten until shoulder is flush
with panel.Do not overtighten
or undertighten(see example below)

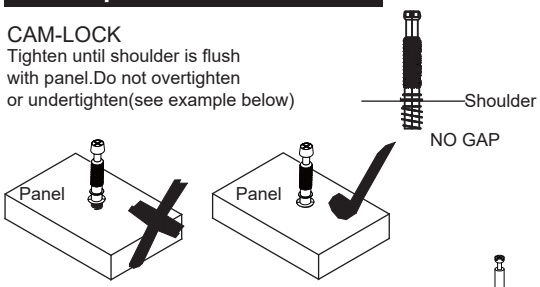

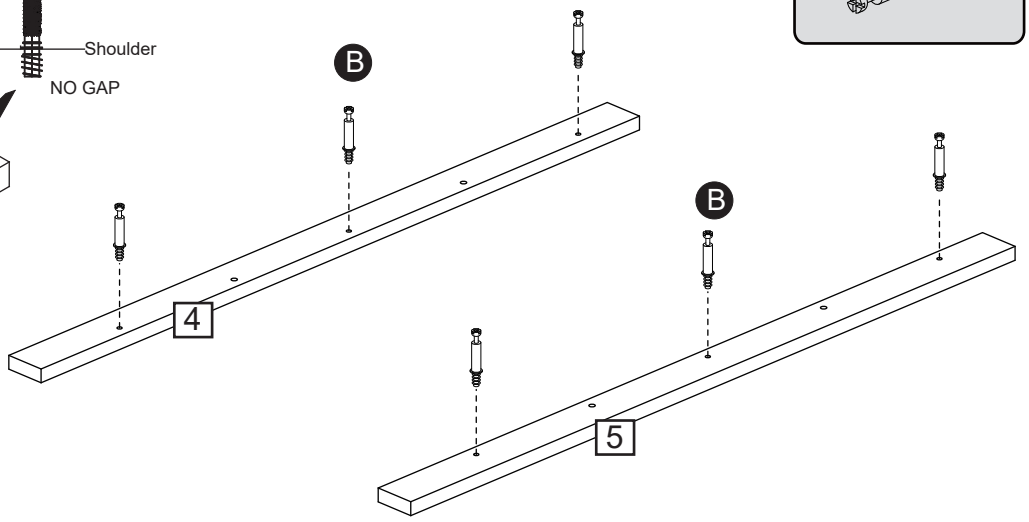

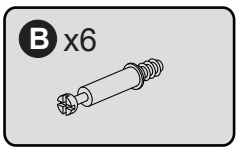

Screw cam bolts (B) into panels (4) and (5).

Assembly Instructions

Step 4

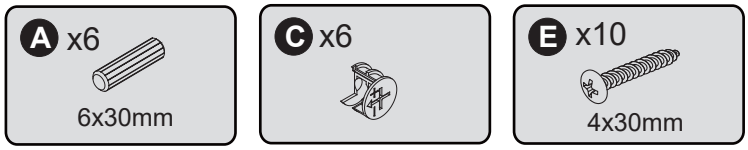

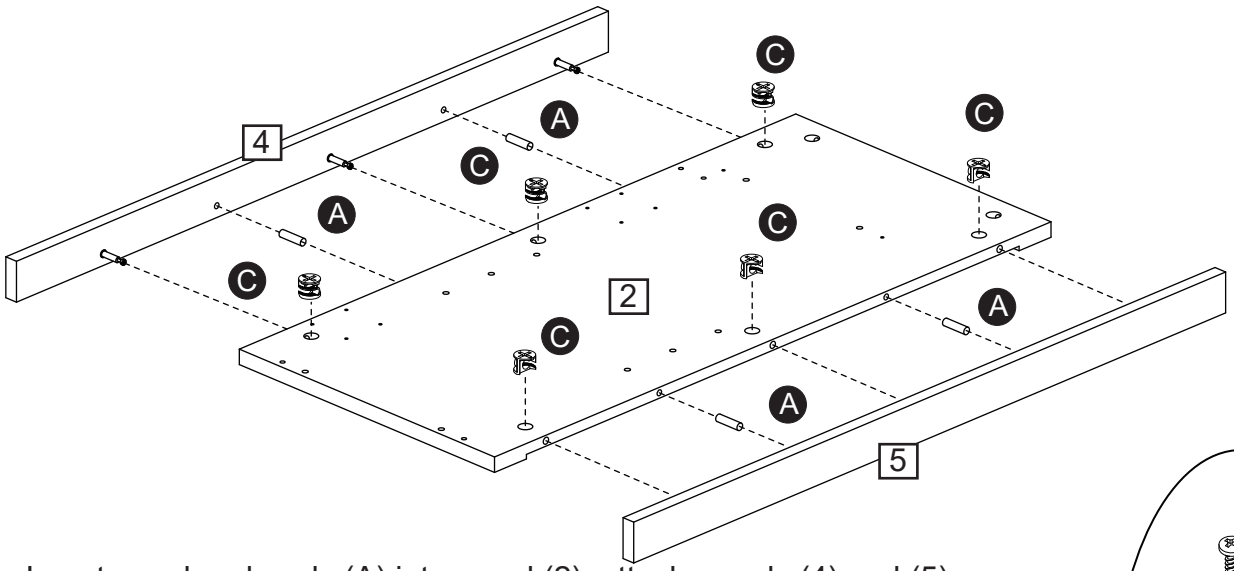

Insert wooden dowels (A) into panel (2), attach panels (4) and (5), insert cam locks (C) and tighten.

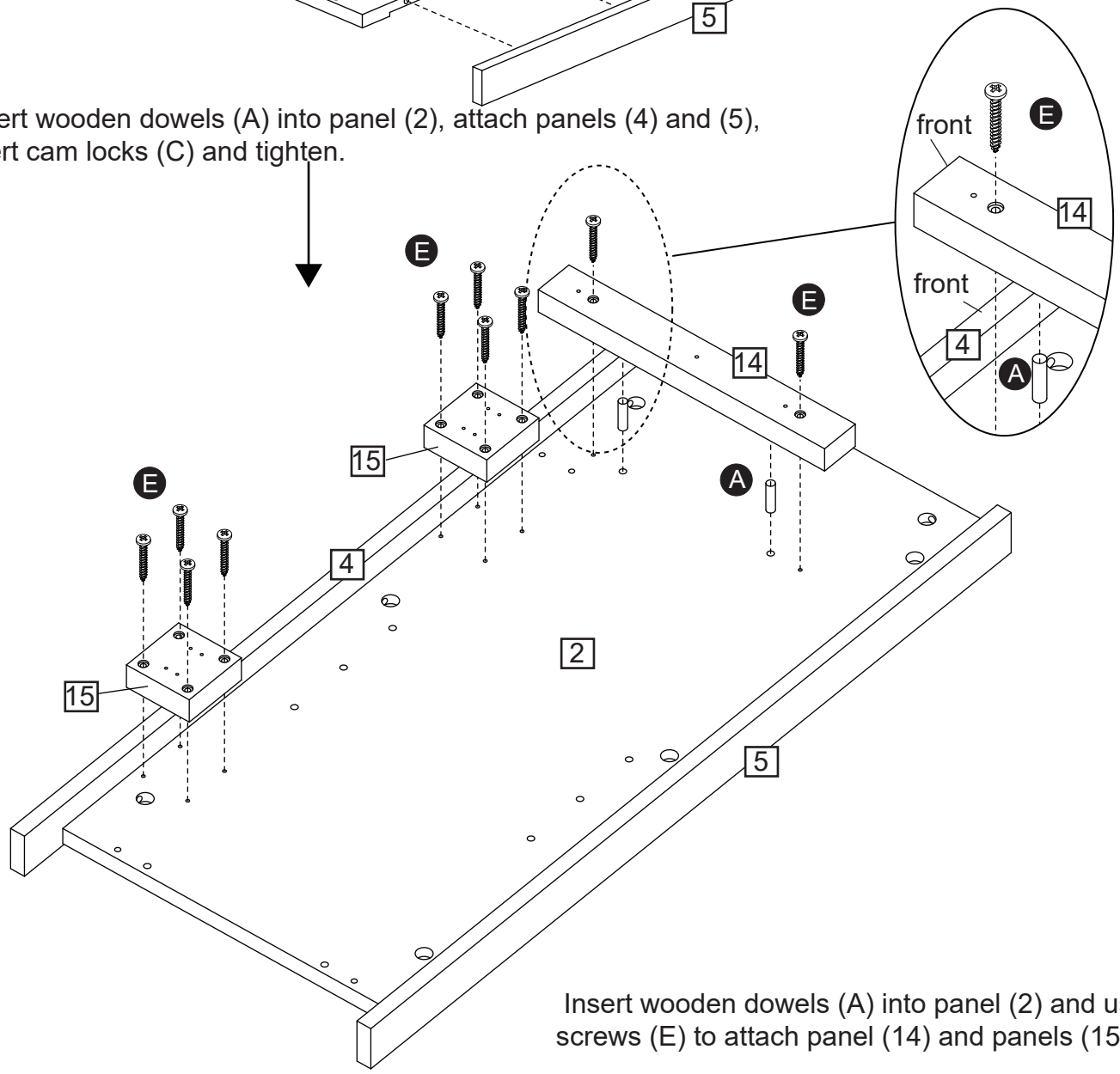

Insert wooden dowels (A) into panel (2) and use screws (E) to attach panel (14) and panels (15).

Assembly Instructions

Step 5

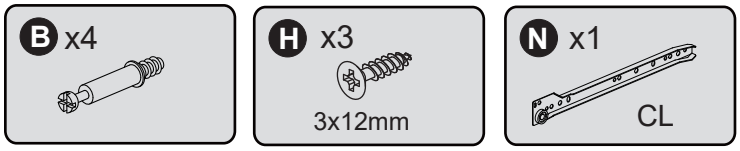

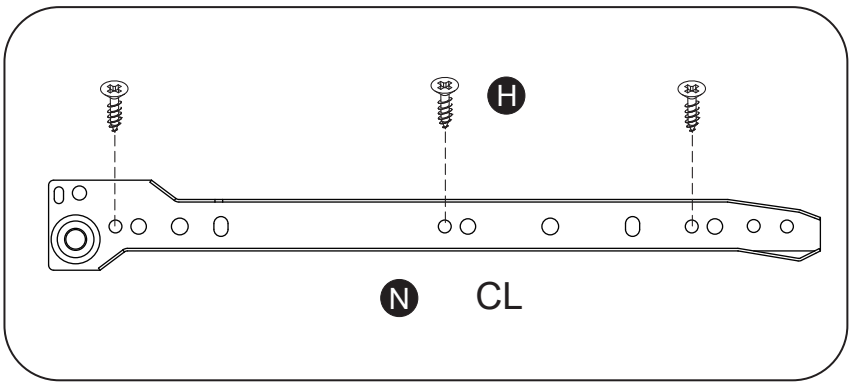

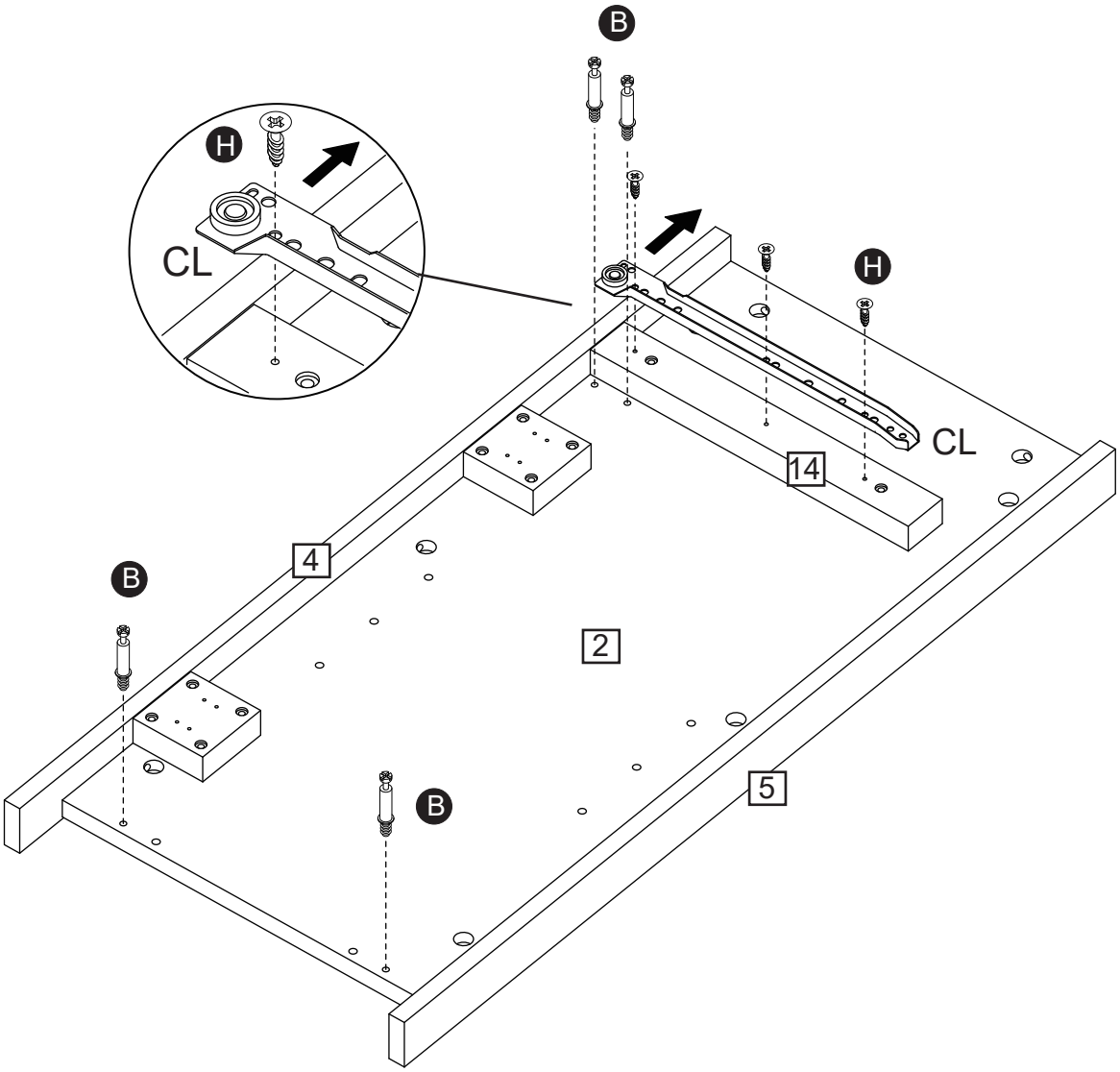

Screw cam bolts (B) into panel (2). Install slide rail (CL) onto panel (14) using screws (H), following the hole positions shown in the diagram.

Assembly Instructions

Step 6

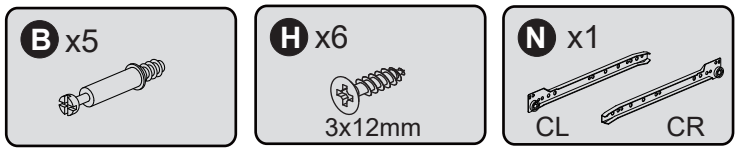

CAM-LOCK
Tighten until shoulder is flush
with panel.Do not overtighten
or undertighten(see example below)

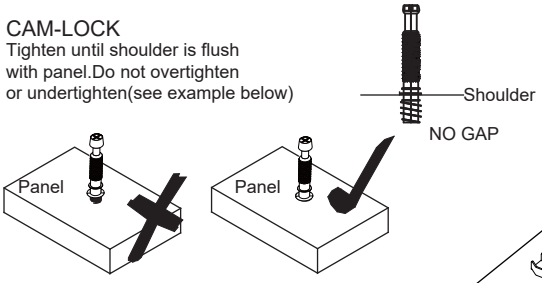

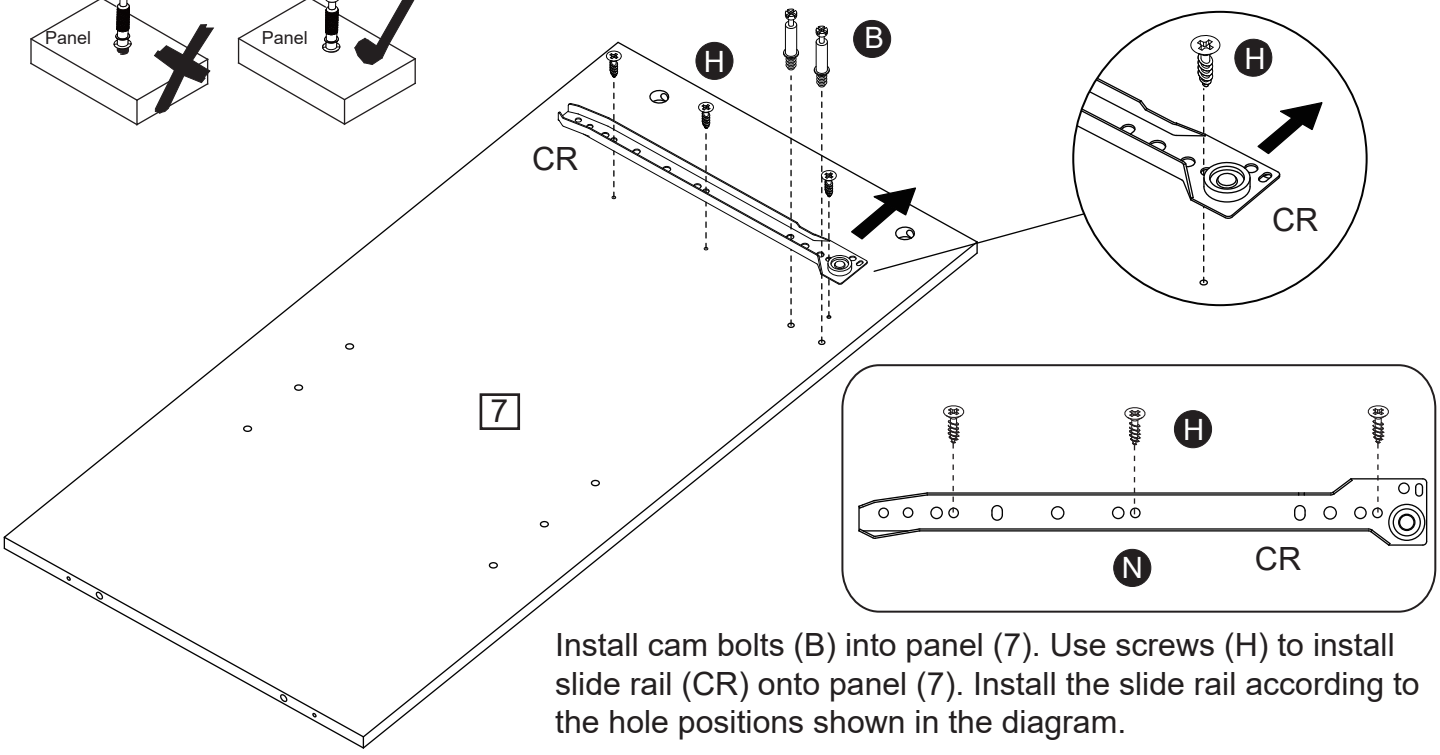

Install cam bolts (B) into panel (7). Use screws (H) to install slide rail (CR) onto panel (7). Install the slide rail according to the hole positions shown in the diagram.

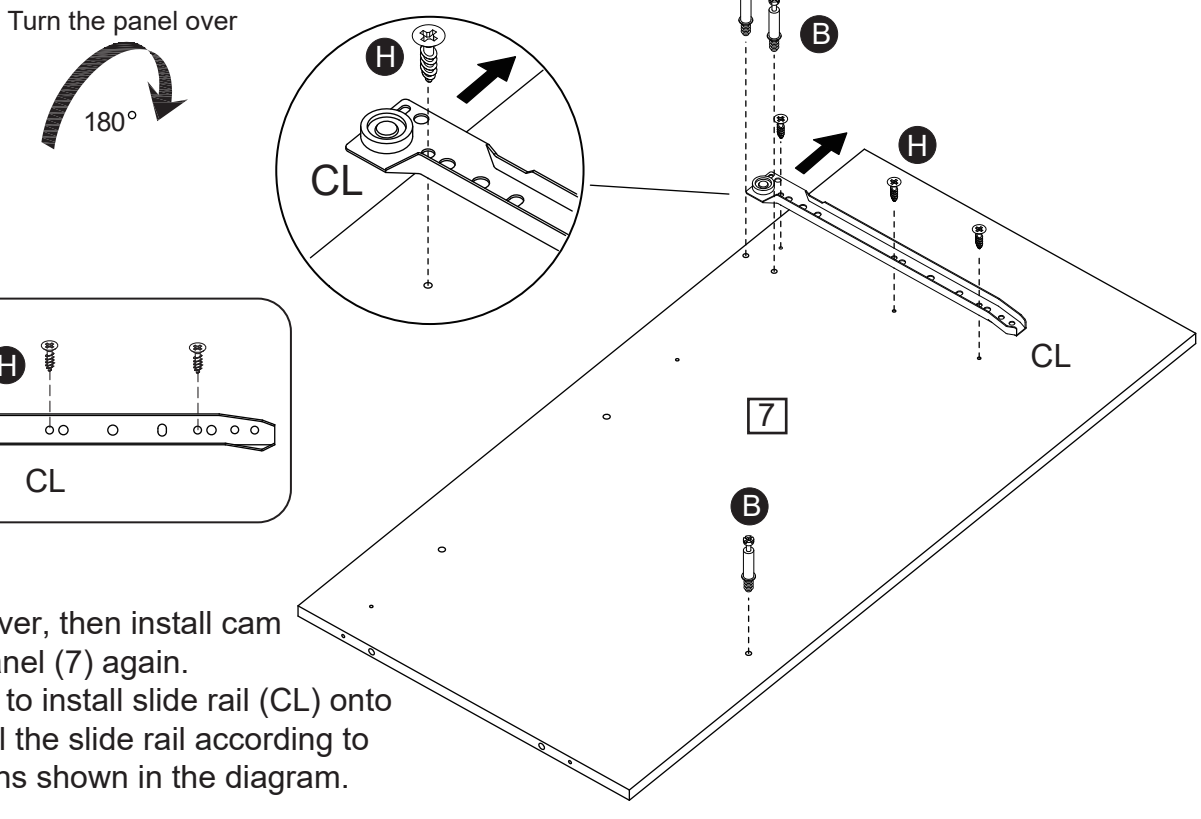

Flip the panel over, then install cam bolts (B) into panel (7) again.
Use screws (H) to install slide rail (CL) onto panel (7). Install the slide rail according to the hole positions shown in the diagram.

Assembly Instructions

Step 7

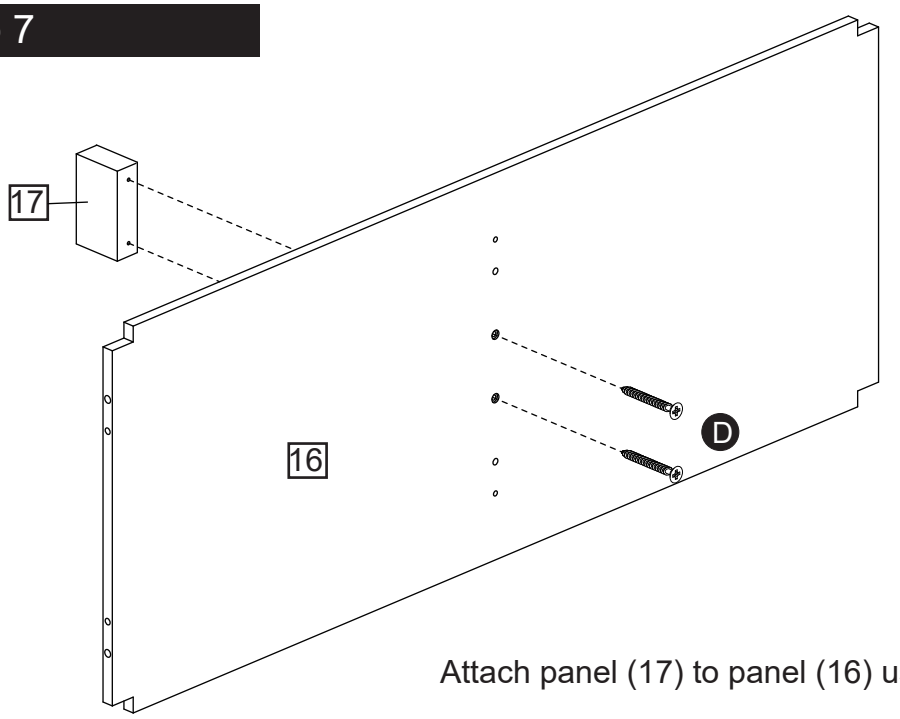

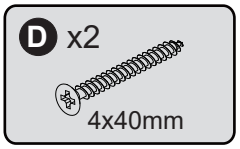

Attach panel (17) to panel (16) using screws (D).

Step 8

Insert wooden dowels (A) into panel (7), then attach panel (16).

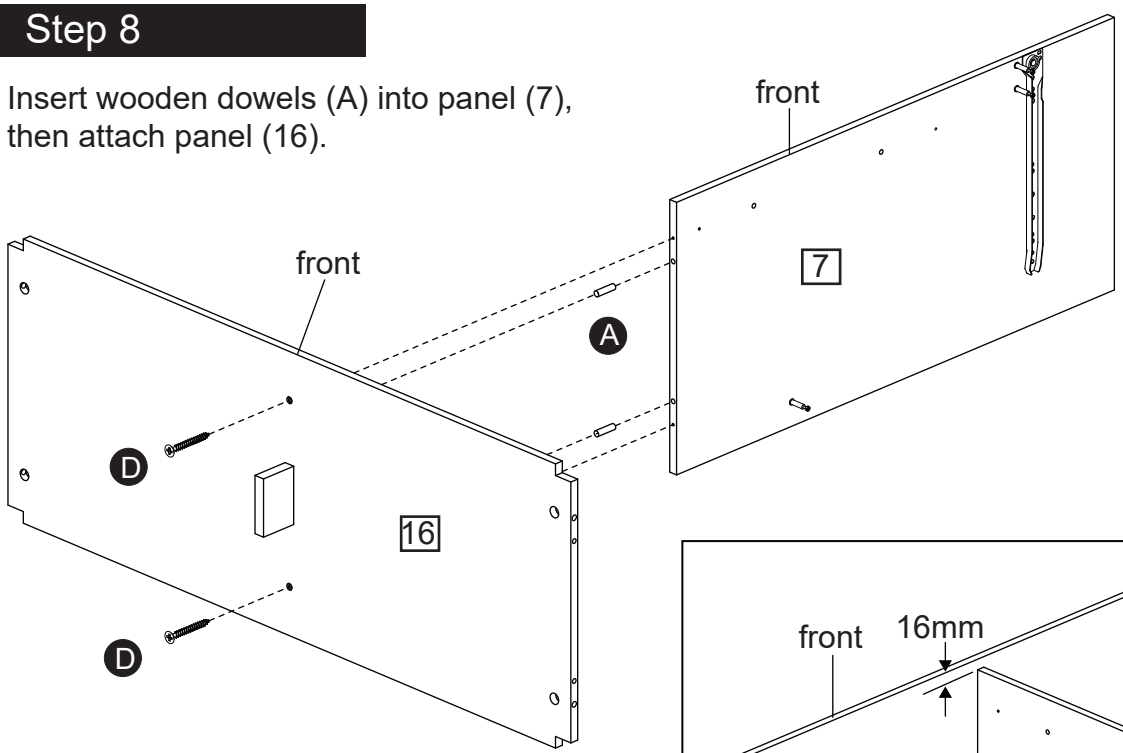

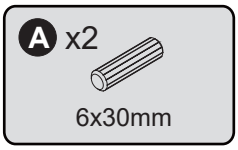

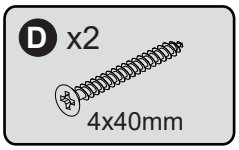

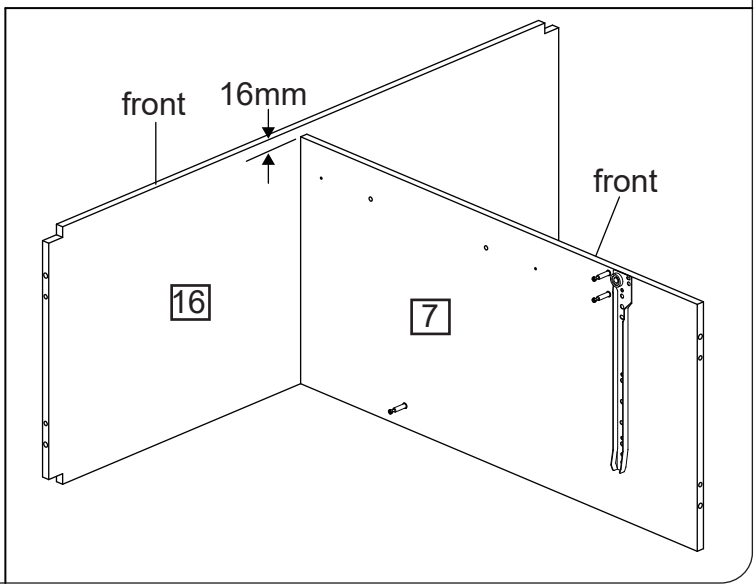

Assembly Instructions

Step 9

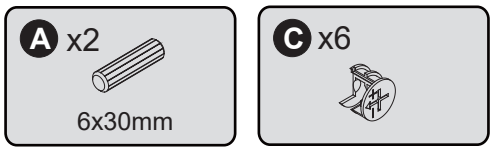

Attach panel (8) to panel (7), insert cam locks (C) and tighten.

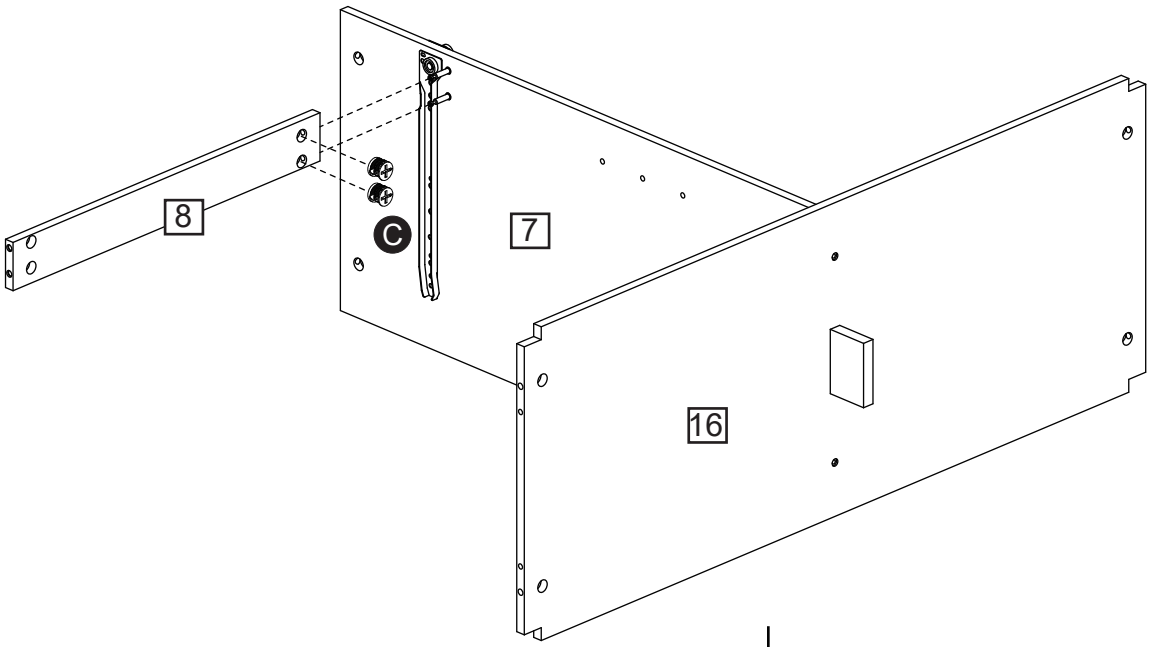

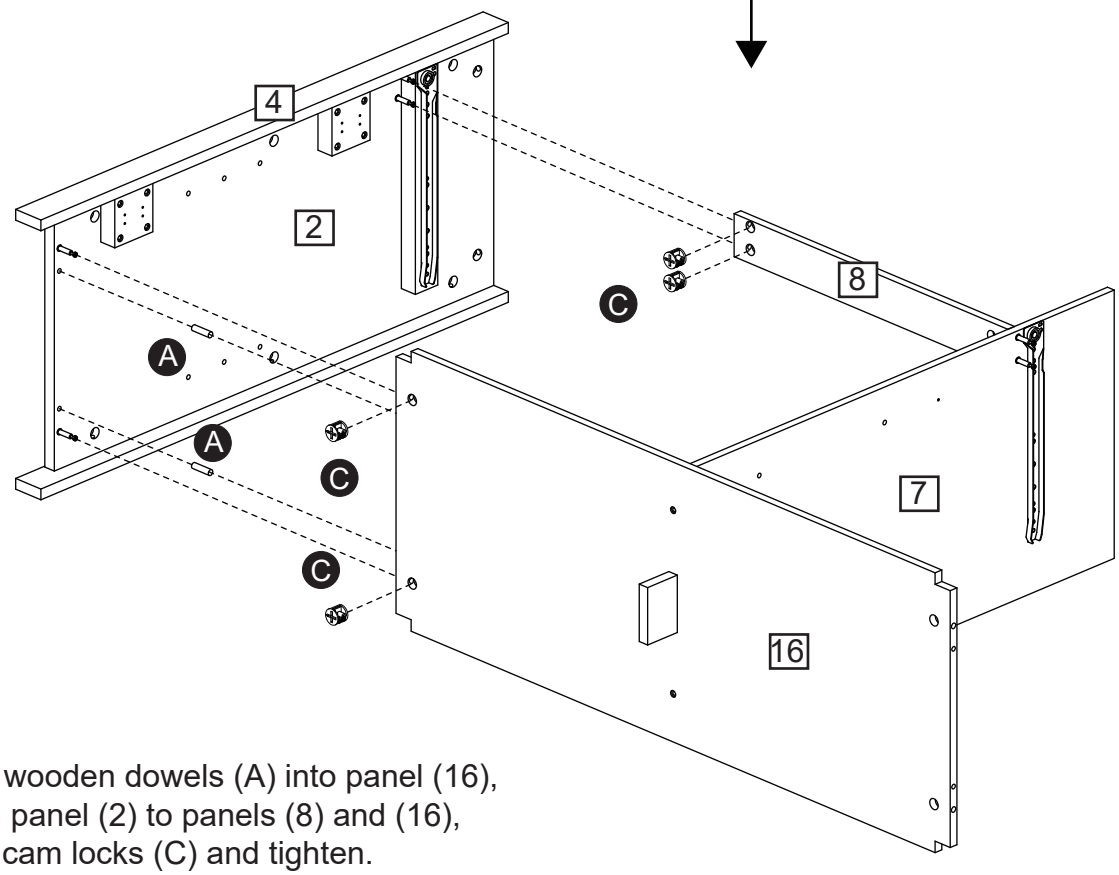

Insert wooden dowels (A) into panel (16), attach panel (2) to panels (8) and (16), insert cam locks (C) and tighten.

Assembly Instructions

Step 10

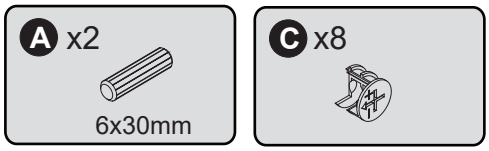

Attach panels (9) and (13) to panel (7), insert cam locks (C) and tighten.

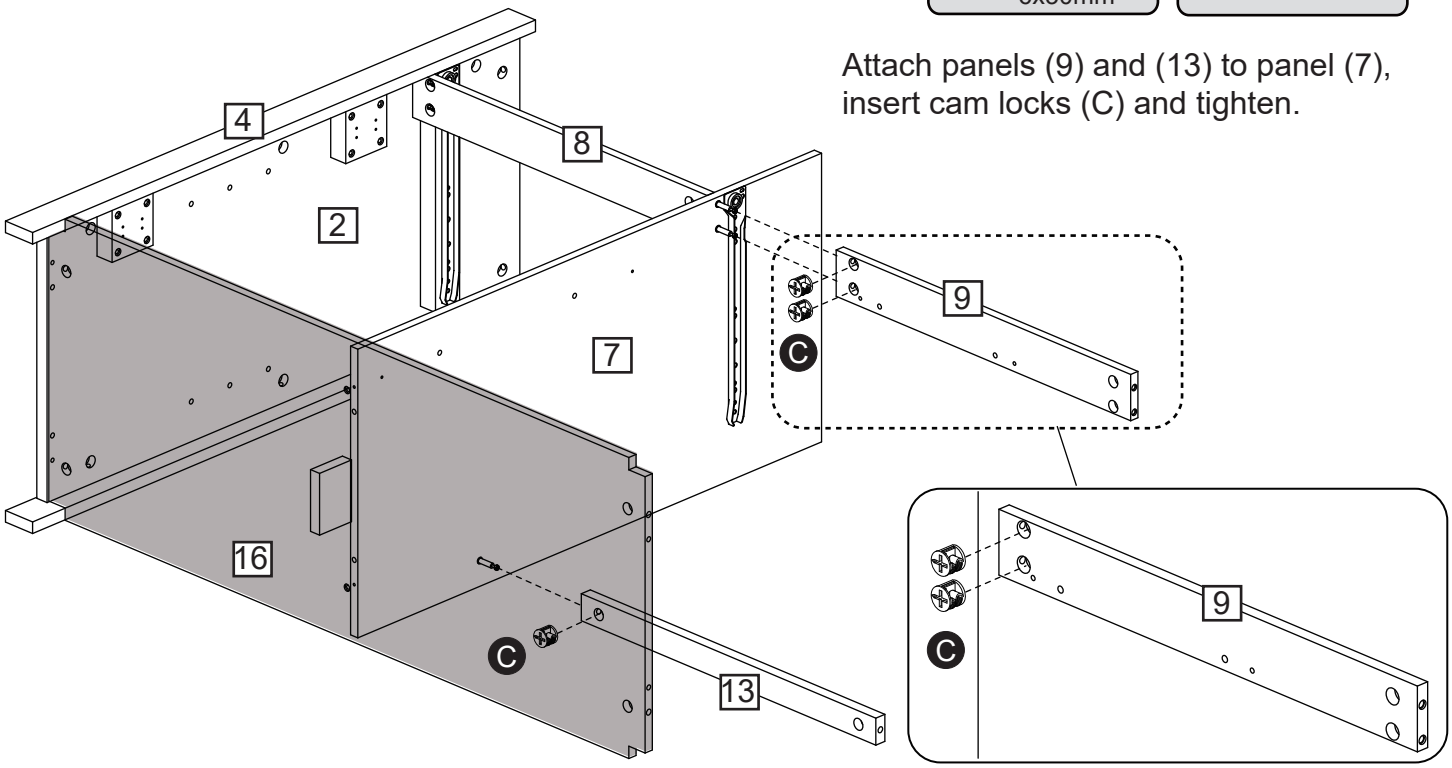

Insert wooden dowels (A) into panel (16), attach panel (3) to panels (9), (13), and (16), insert cam locks (C) and tighten.

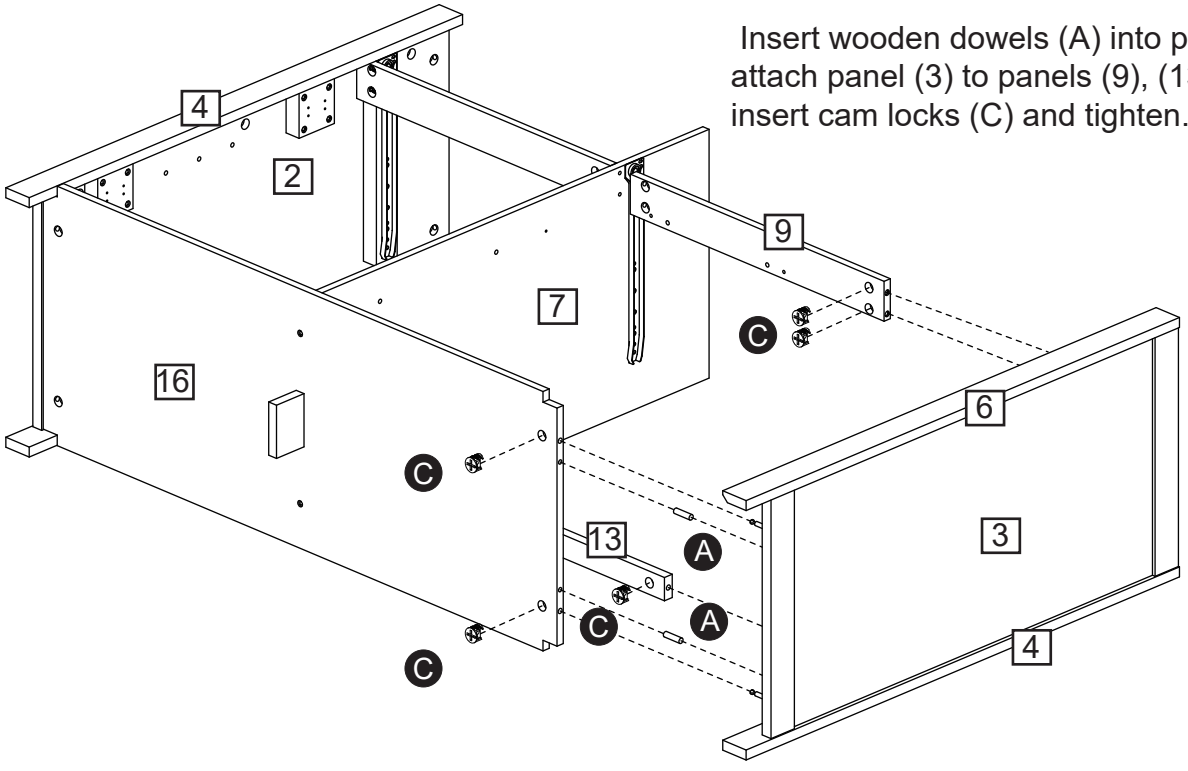

Assembly Instructions

Step 11

Insert wooden dowels (A) and attach panel (11) to panel (9) using screws (O).

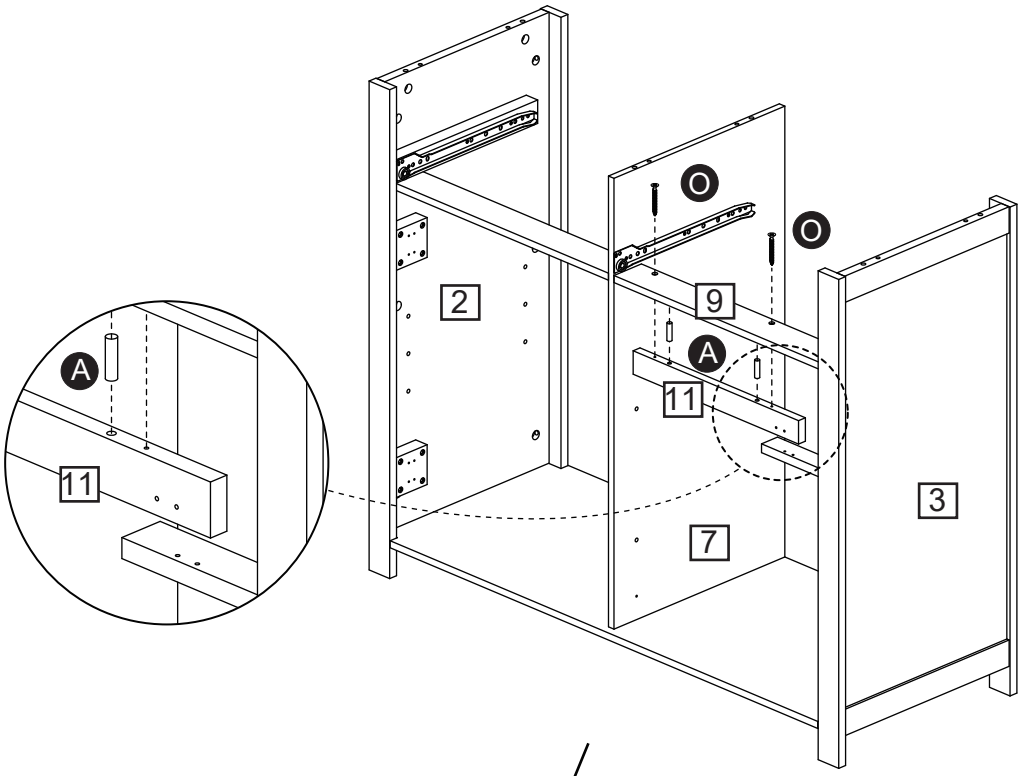

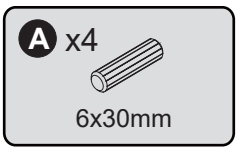

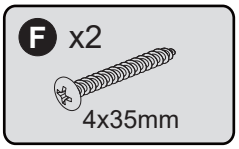

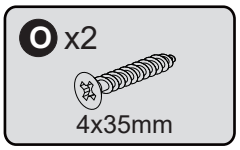

Insert wooden dowels (A) and attach panel (12) to panel (7) using screws (F).

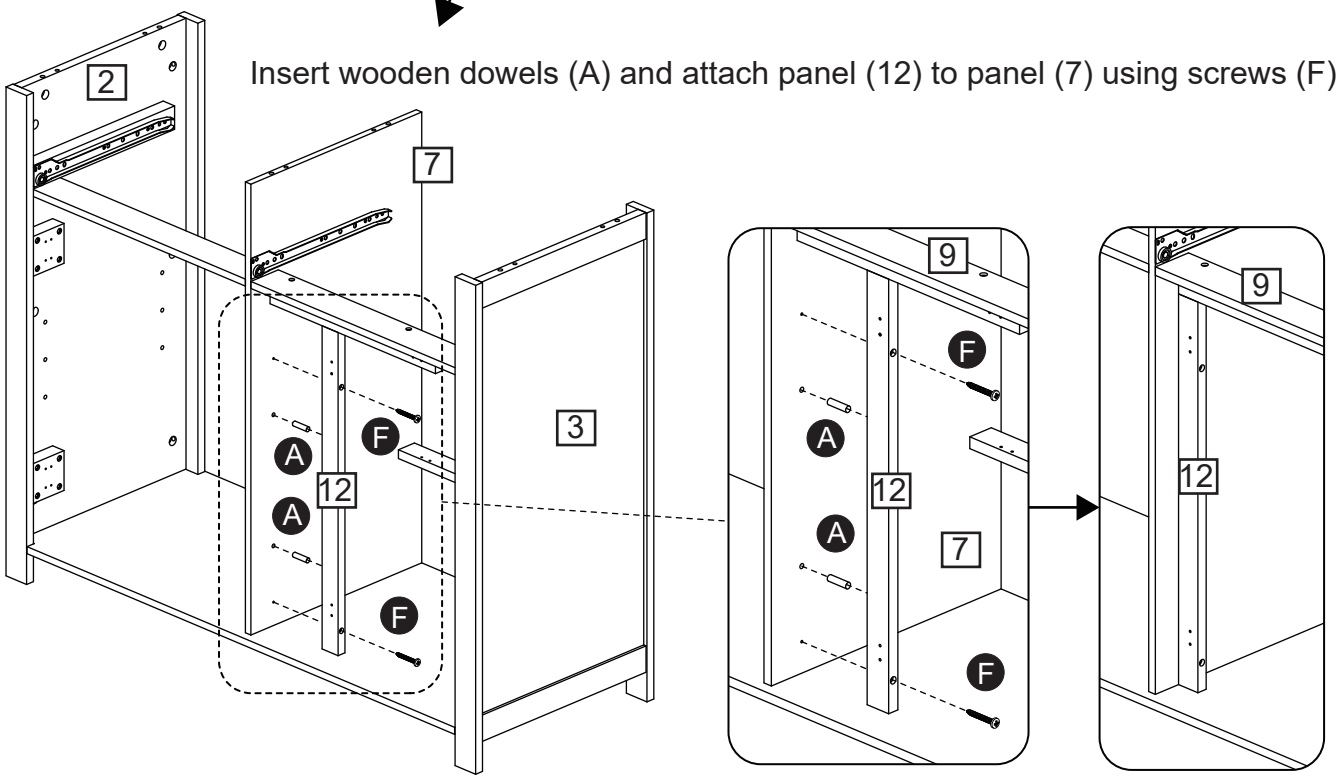

Assembly Instructions

Step 12

CAM-LOCK
Tighten until shoulder is flush
with panel.Do not overtighten
or undertighten(see example below)

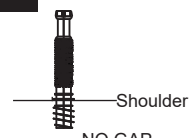

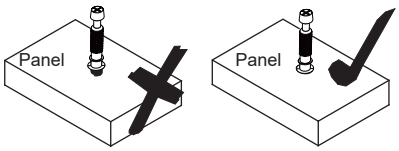

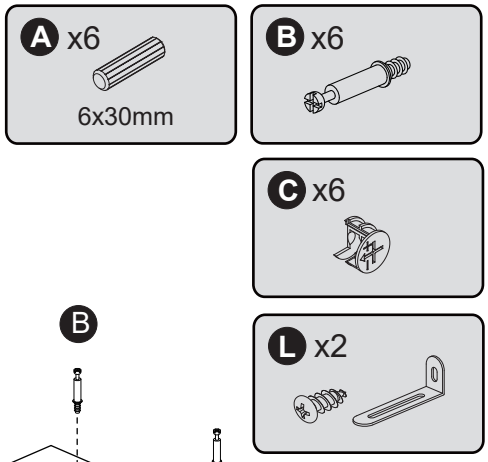

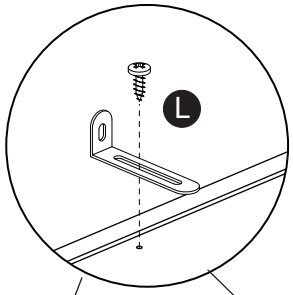

Do not fully tighten wall fixing brackets until it's ready to be fixed to the wall.

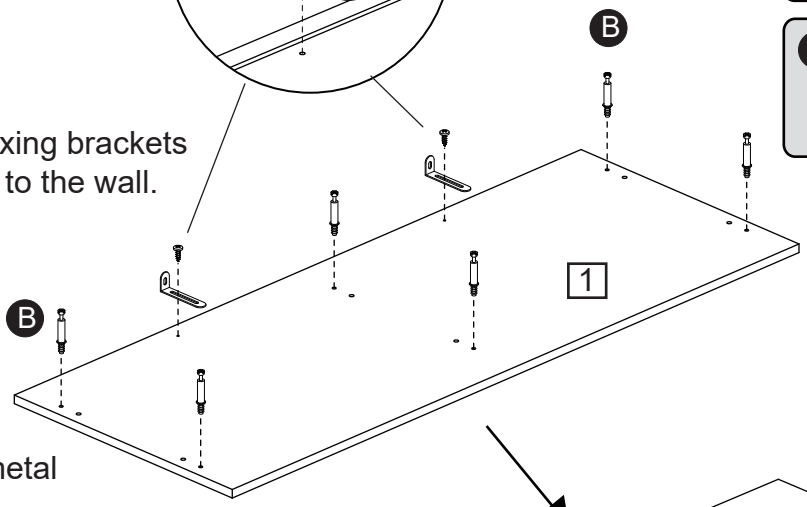

Install cam bolts (B) and metal plates (L) onto panel (1).

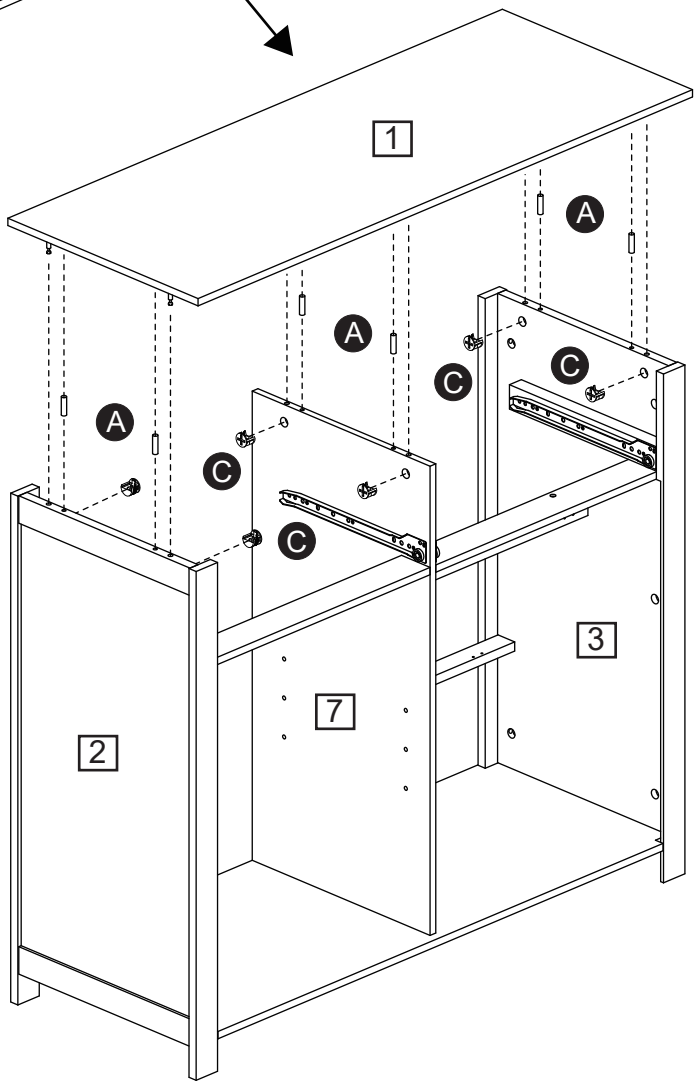

Insert wooden dowels (A) into panels (2), (3), and (7), then attach panel (1) to the cabinet and secure with cam locks (C).

Assembly Instructions

Step 13

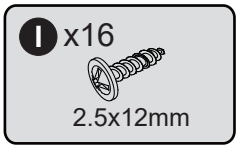

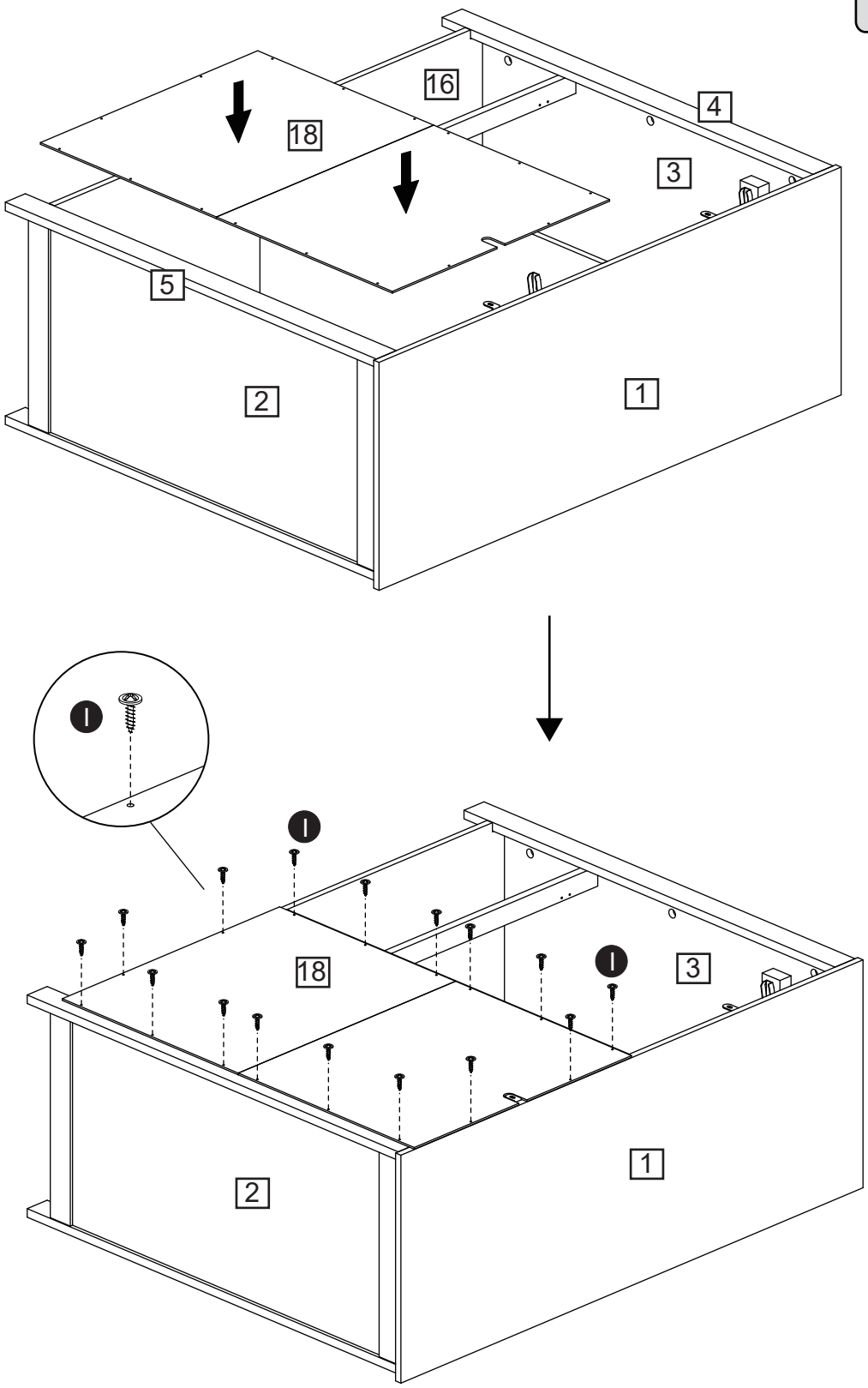

Secure panel (18) to the cabinet using screws (I).

Assembly Instructions

Step 14

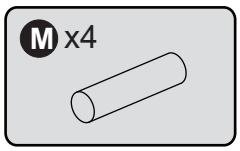

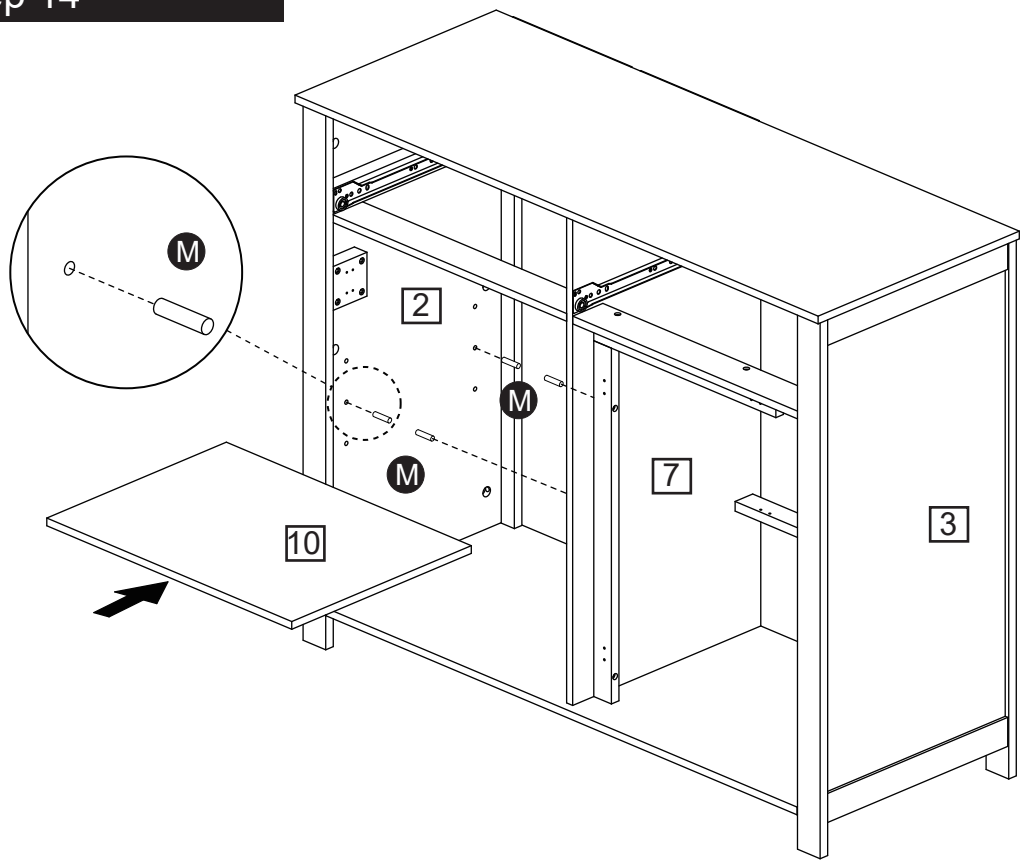

Insert shelf supports (M) into panels (2) and (7), then place shelf panel (10) on the supports.

Step 15

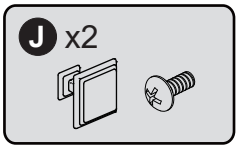

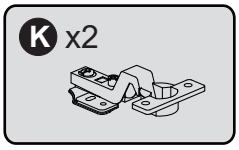

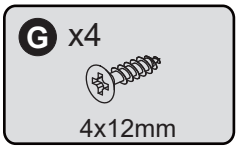

Attach hinge (K) to panel (19) using screws (G), then install handle (J).

Assembly Instructions

Step 16

Attach panel (19) to panels (15) using screws (G).

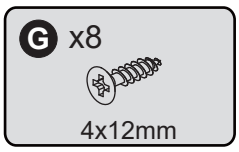

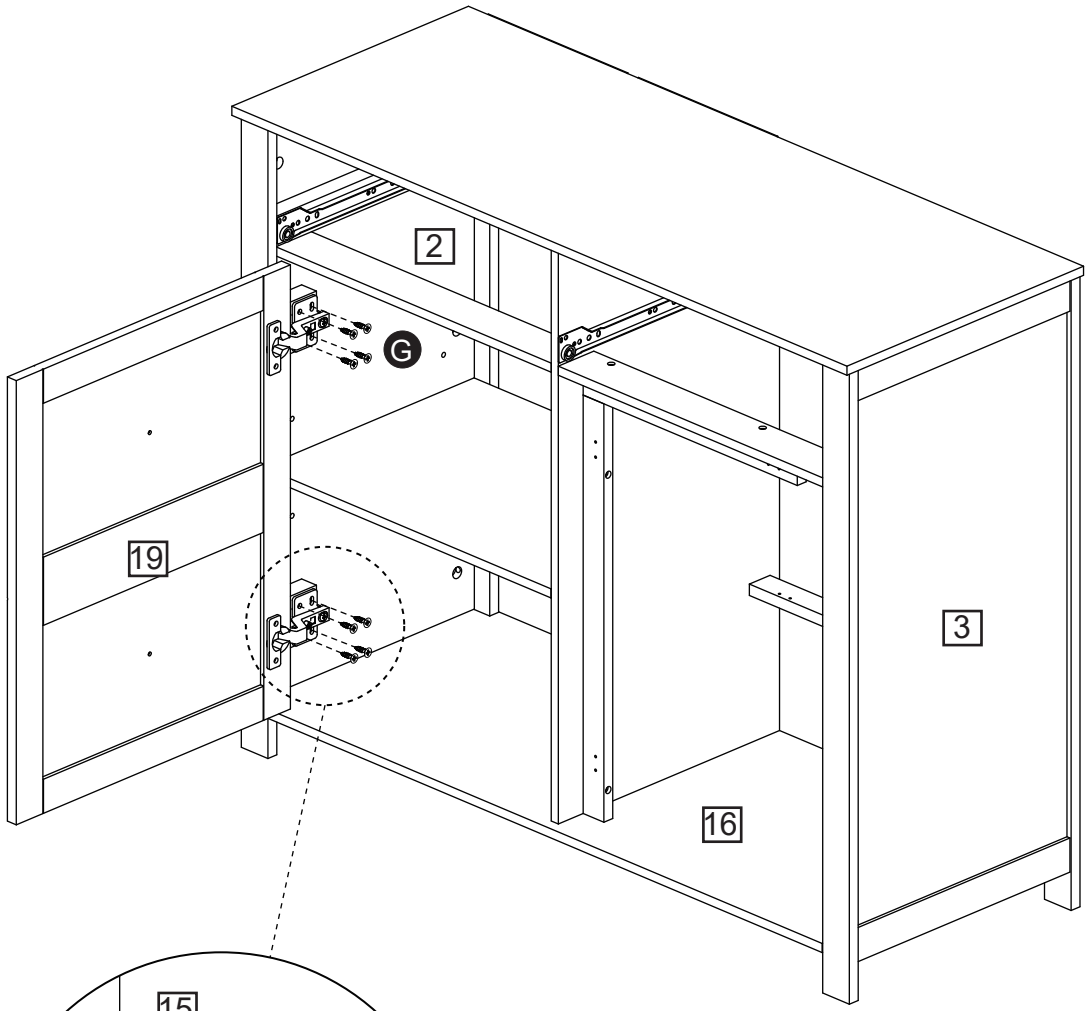

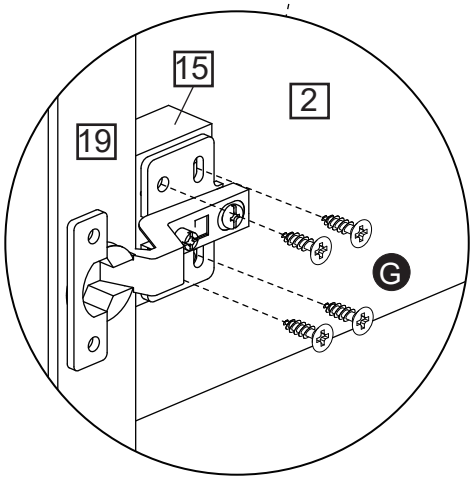

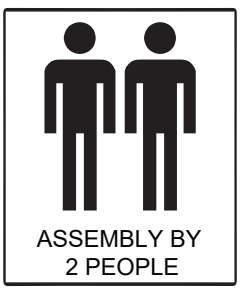

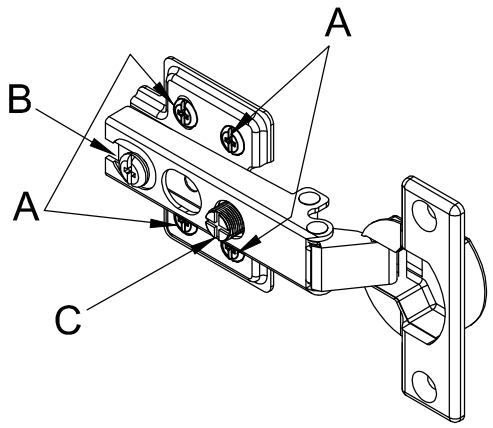

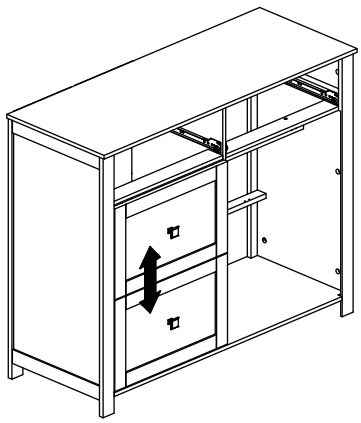

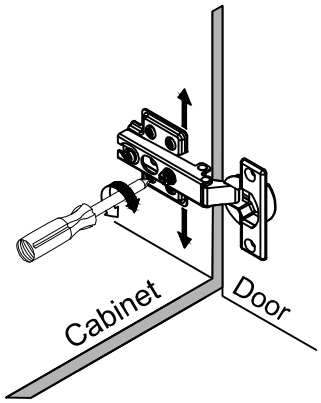

To adjust the vertical height.
Loosen the four screws "A" on both hinges. Two of them are usually in slotted holes which allows you to adjust up or down by a few mm. Then tighten back up.

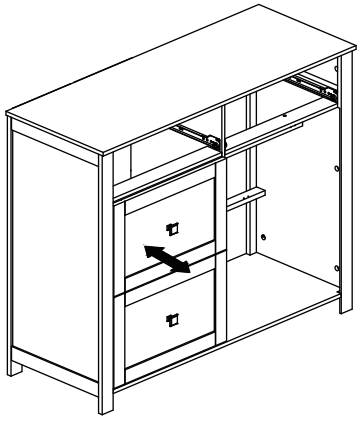

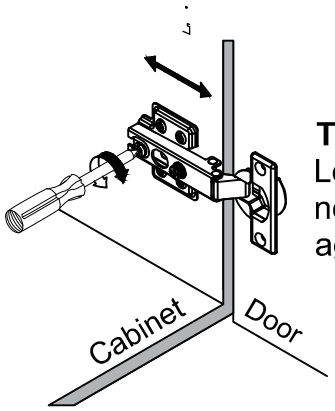

To adjust depth.
Loosen screw "B" and adjust door, if the door can not be adjusted, please loosen screw "C", then try again. Tighten screw "B" and "C".

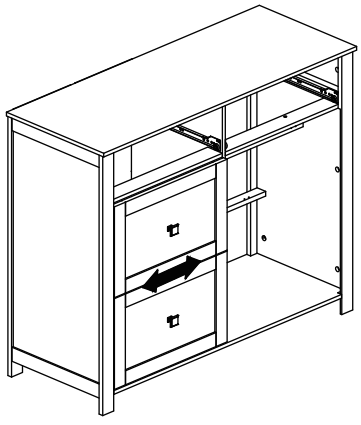

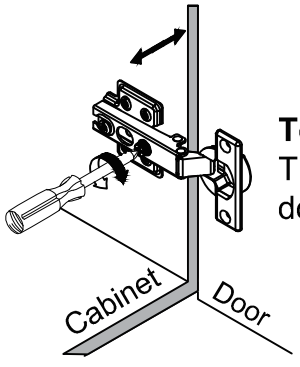

To adjust side ways.
Turning the screw "C" on BOTH hinges on each door.

Assembly Instructions

Step 17

Install handle (J) onto panel (20).

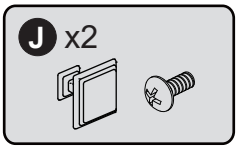

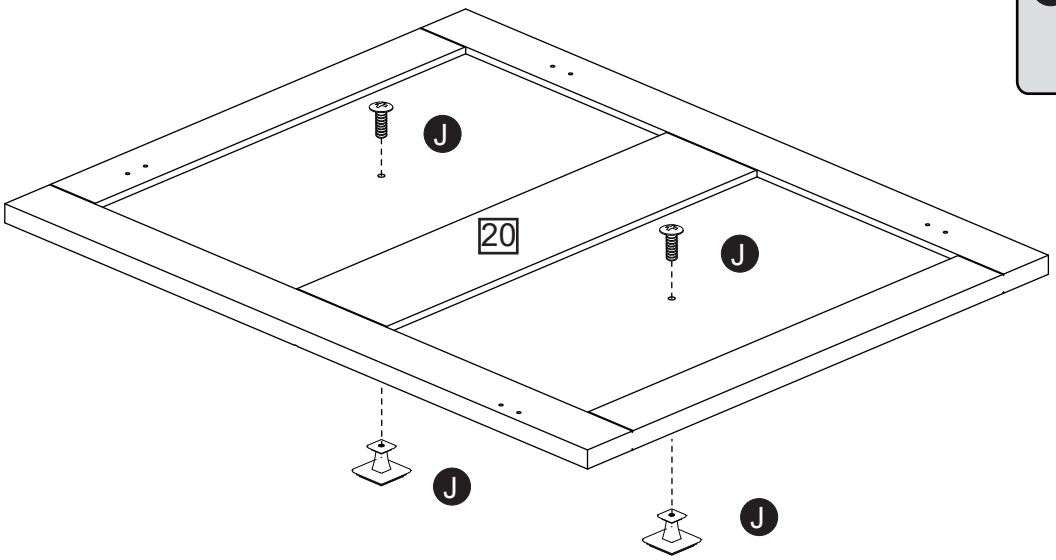

Step 18

Attach panel (20) to the refrigerator as shown.

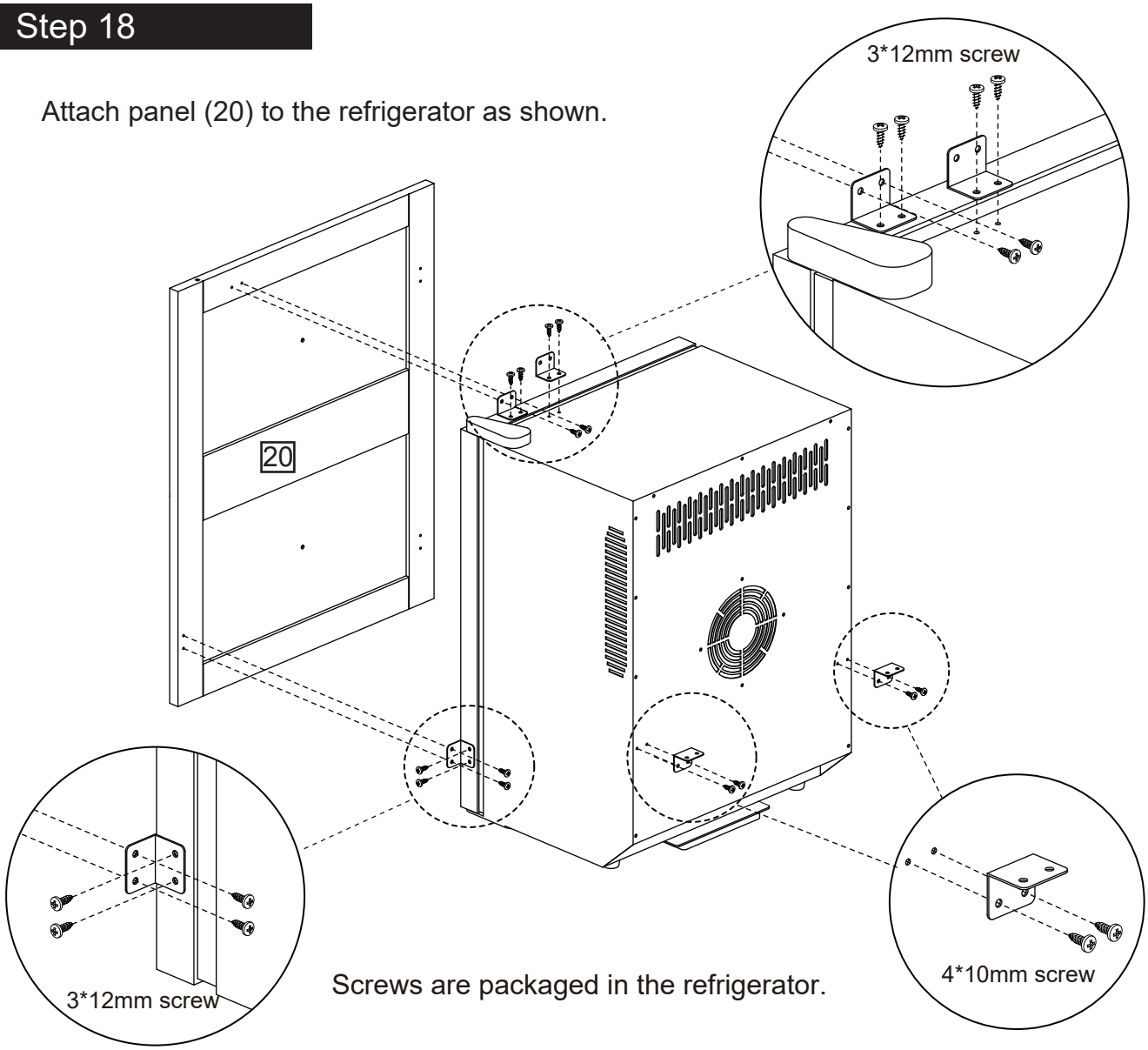

Screws are packaged in the refrigerator.

Assembly Instructions

Step 19

Attach panel (20) to the refrigerator as shown.

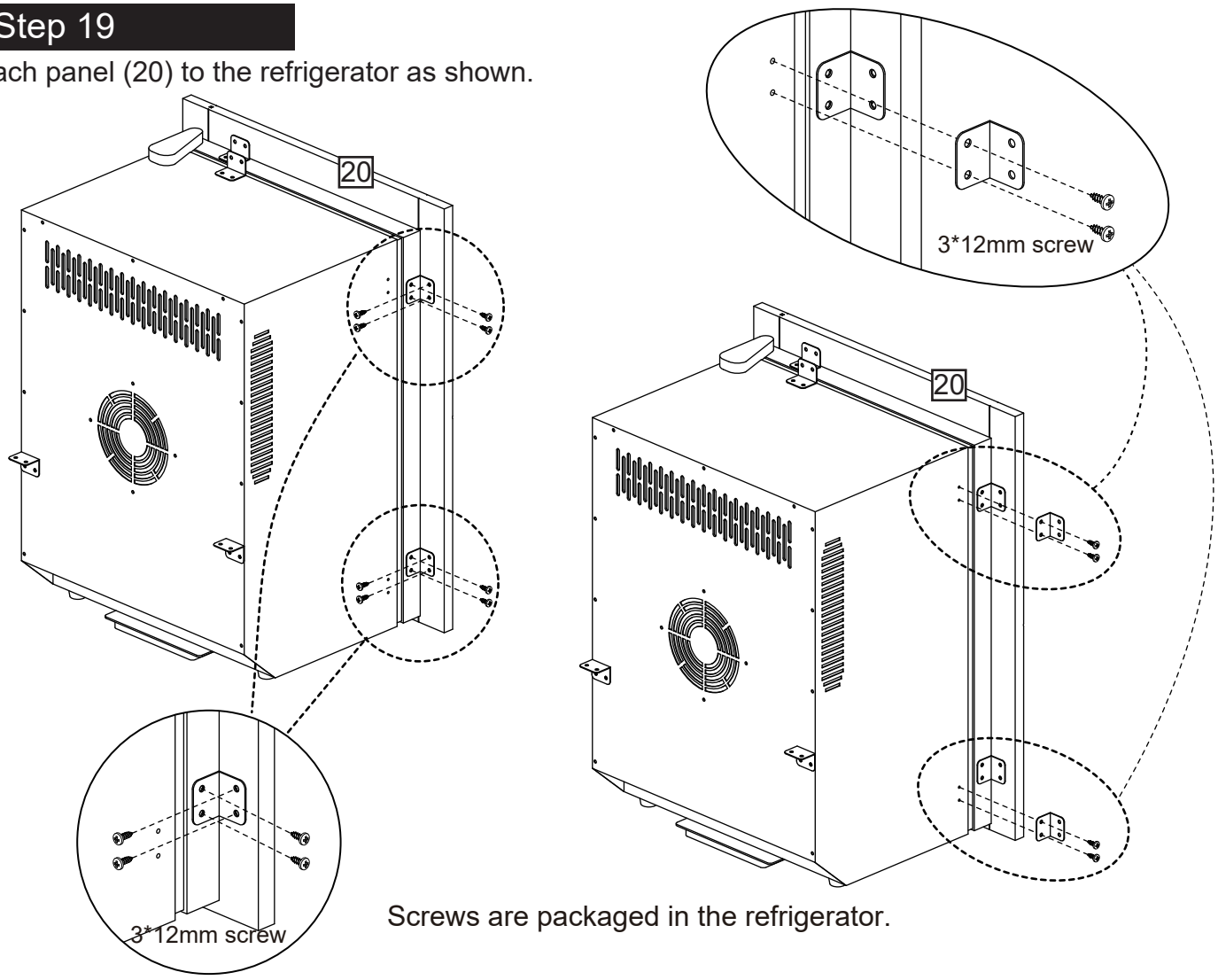

Screws are packaged in the refrigerator.

Step 20

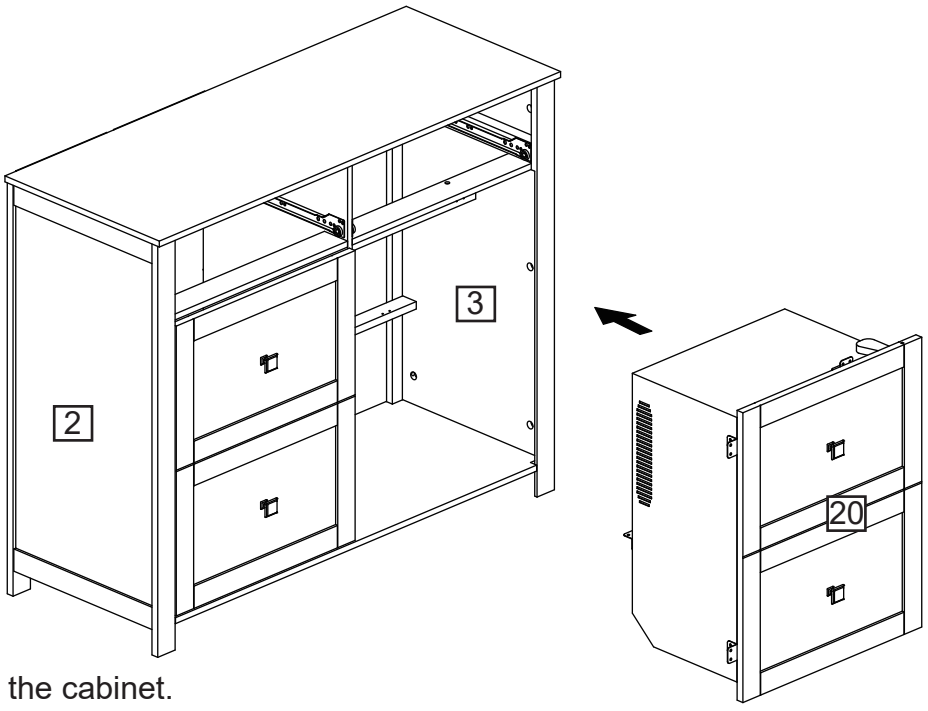

Place the refrigerator into the cabinet.

Assembly Instructions

Step 21

Screws are packaged in the refrigerator.

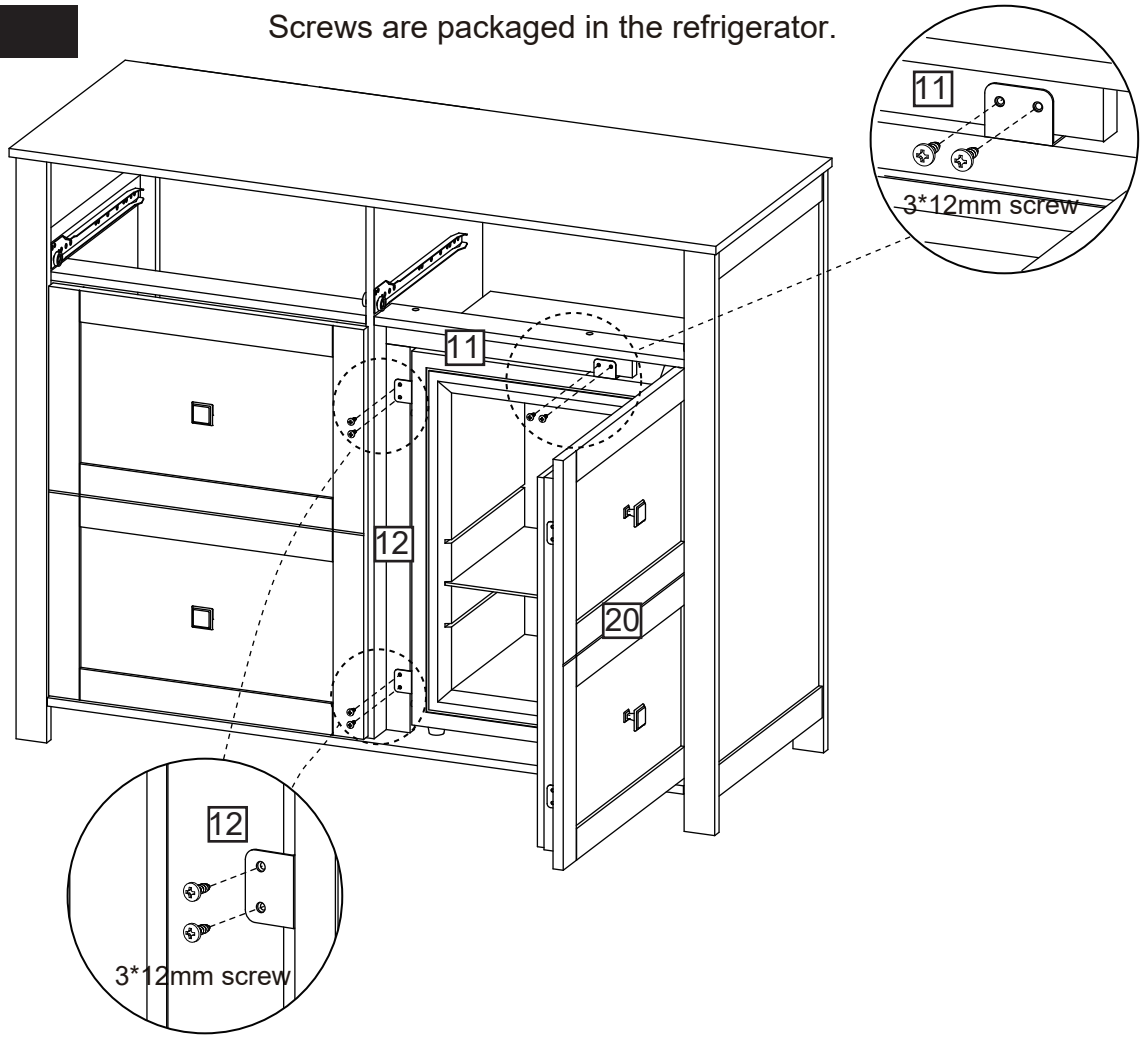

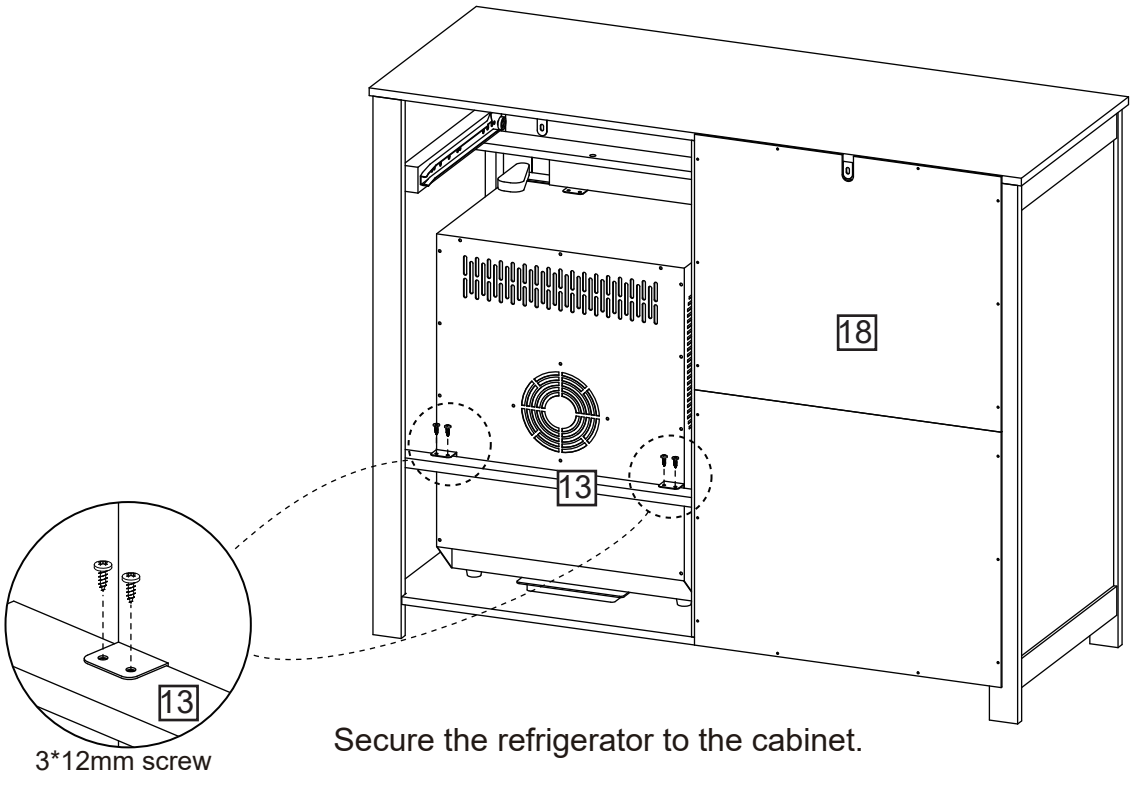

Secure the refrigerator to the cabinet.

Assembly Instructions

Step 22

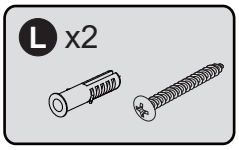

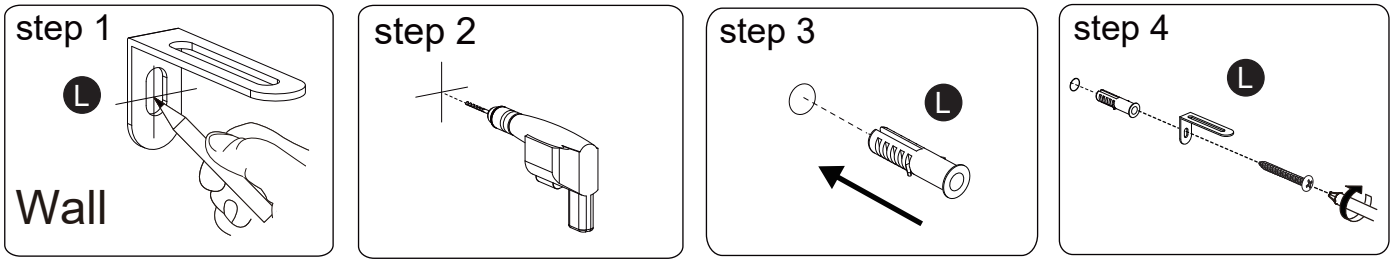

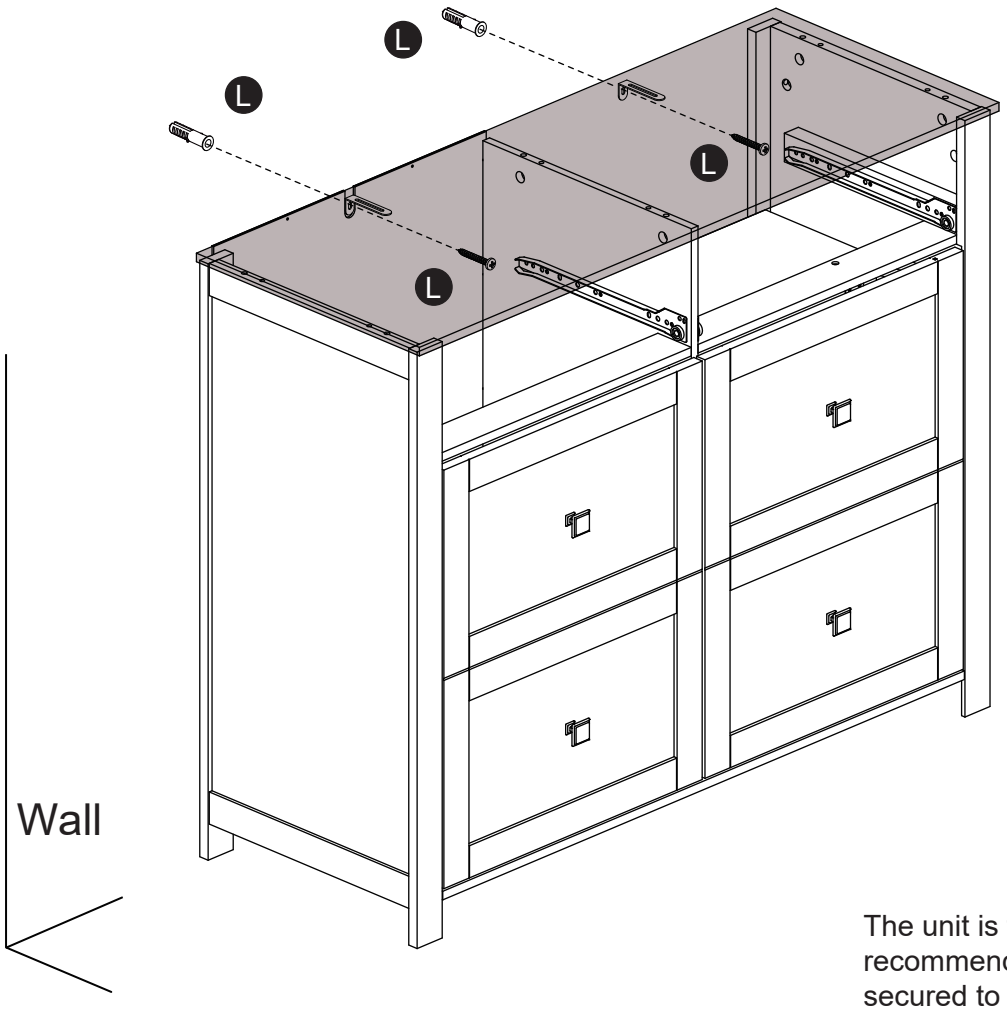

Use hardware (L) to secure the cabinet to the wall.

Please read the Guide to Wall Mounting & Fixings on the last page before excuting this step.

The unit is floor standing, but it is recommended that the unit is secured to the wall.

1.Move the unit into desired position.
2.Mark the wall with a suitable scribe the position of the fixing holes.

Warning:
Before driling,check wall for hidden pipes and cables.

3.Drill holes and insert wall plug.
4.Attach bracket(L) to the wall.

Assembly Instructions

Step 23

Attach panels (24) and (25) to panel (23) using screws (O).

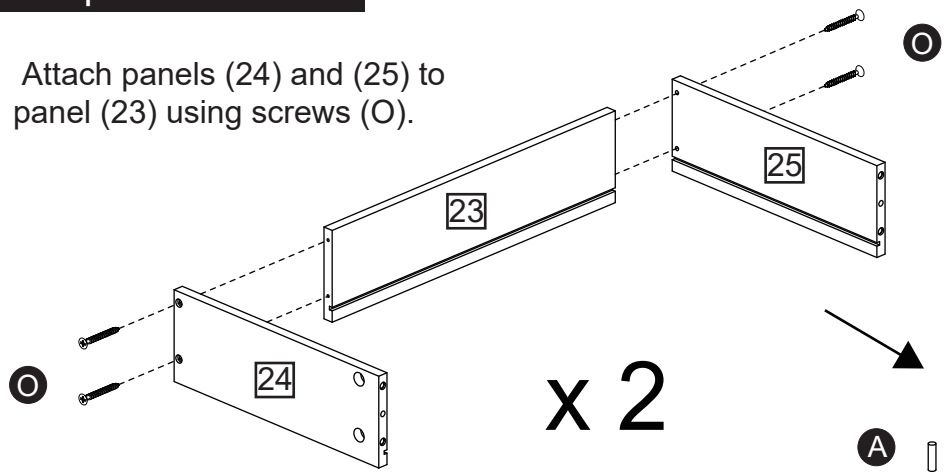

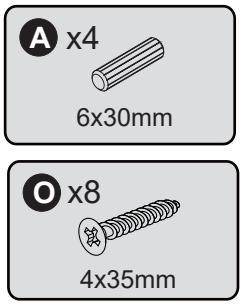

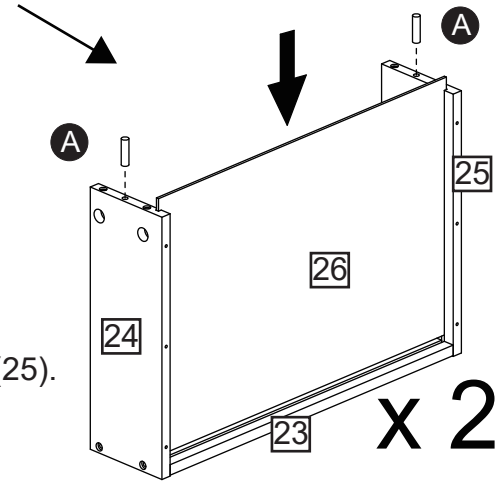

Insert panels (26) into the grooves of panels (24) and (25). Ensure grooves are aligned.

Step 24

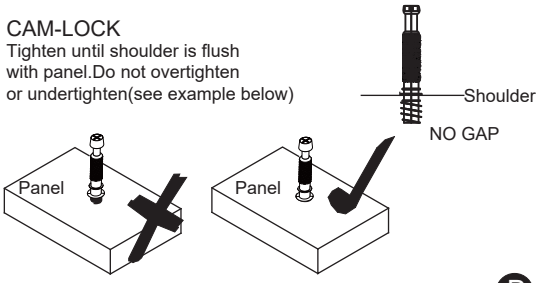

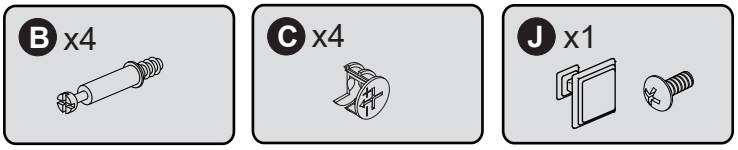

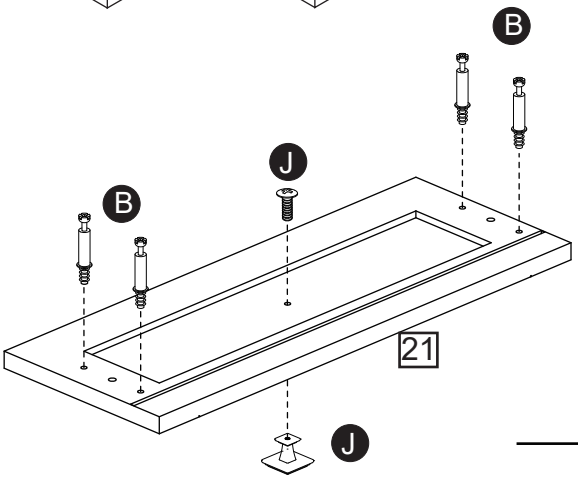

Install cam bolts (B) and handle (J) onto panel (21).

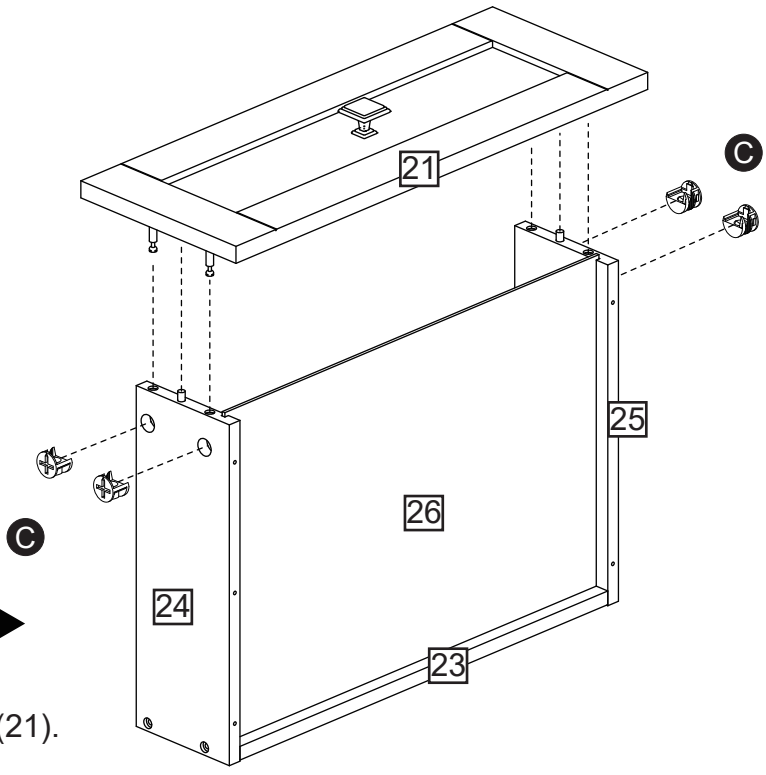

Attach panel (21) to panels (24) and (25), insert cam locks (C) and tighten.

Assembly Instructions

Step 25

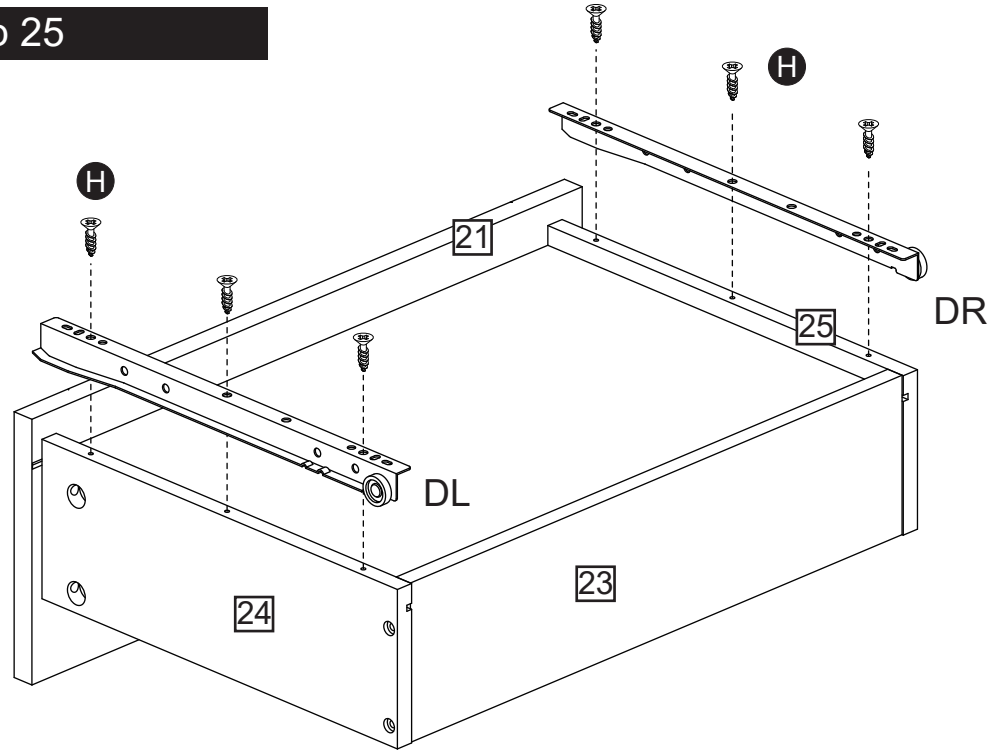

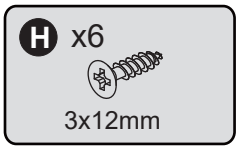

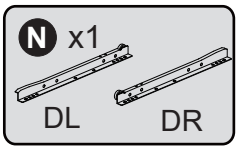

Install slide rails (DL) and (DR) onto panels (24) and (25) using screws (H), following the hole positions shown in the diagram.

Step 26

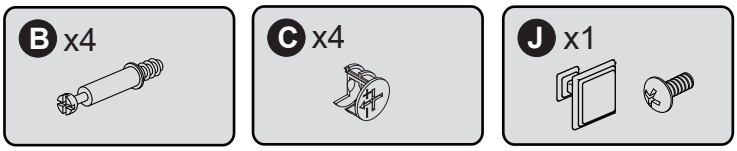

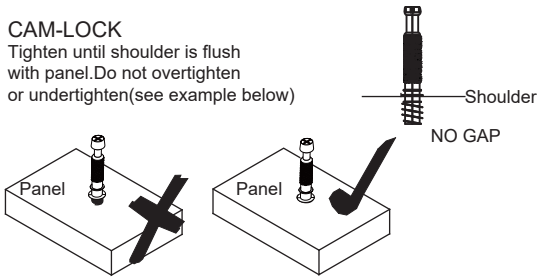

Install cam bolts (B) and handle (J) onto panel (22).

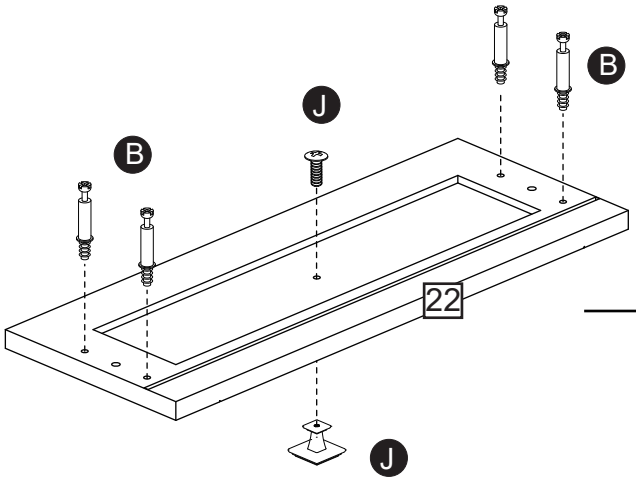

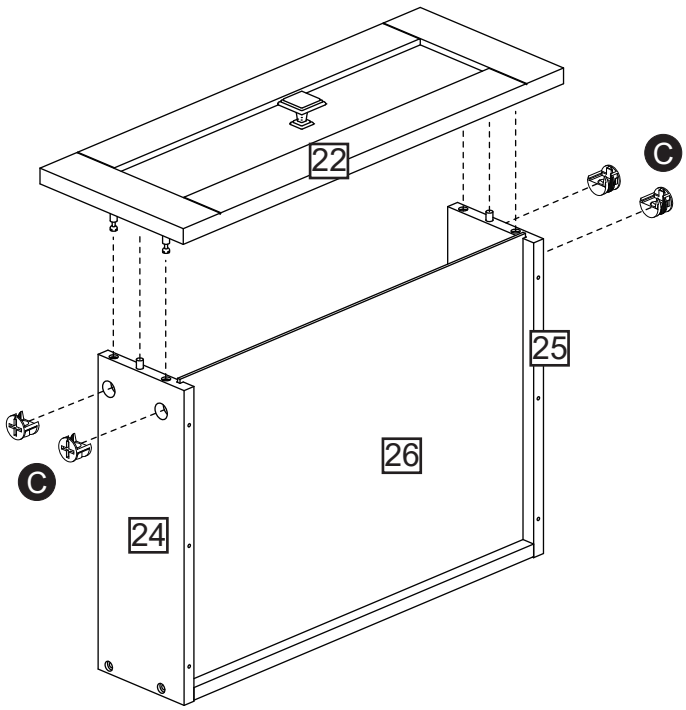

Attach panel (22) to panels (24) and (25), insert cam locks (C) and tighten.

Assembly Instructions

Step 27

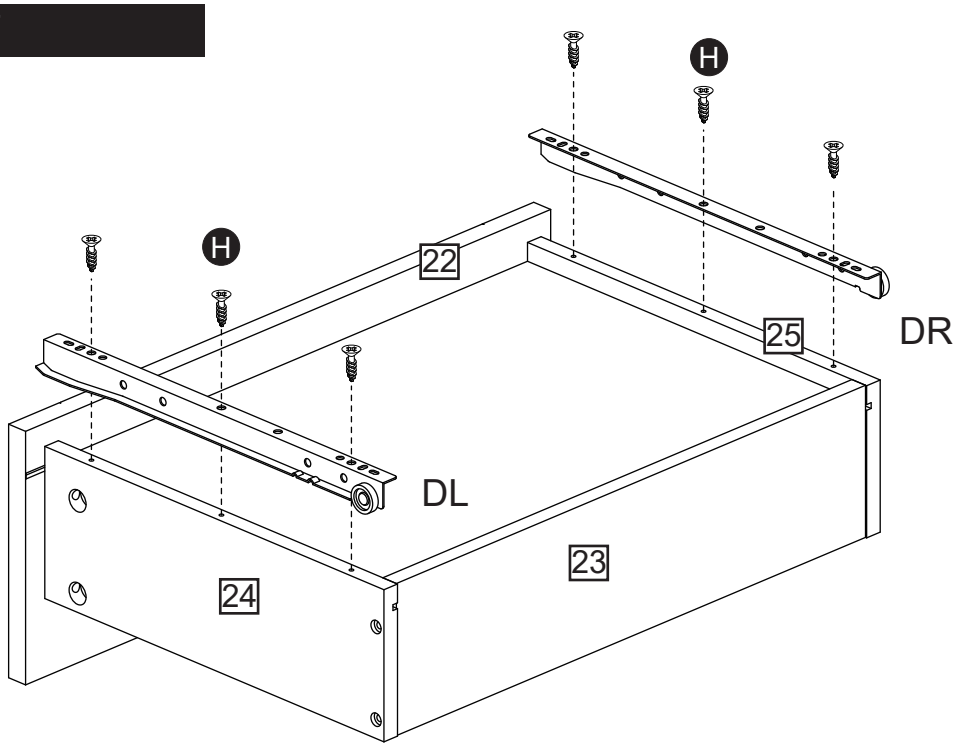

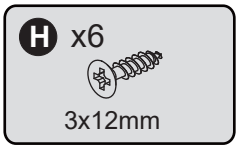

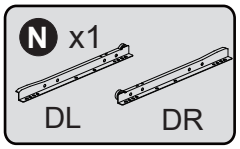

Install slide rails (DL) and (DR) onto panels (24) and (25) using screws (H), following the hole positions shown in the diagram.

Step 28

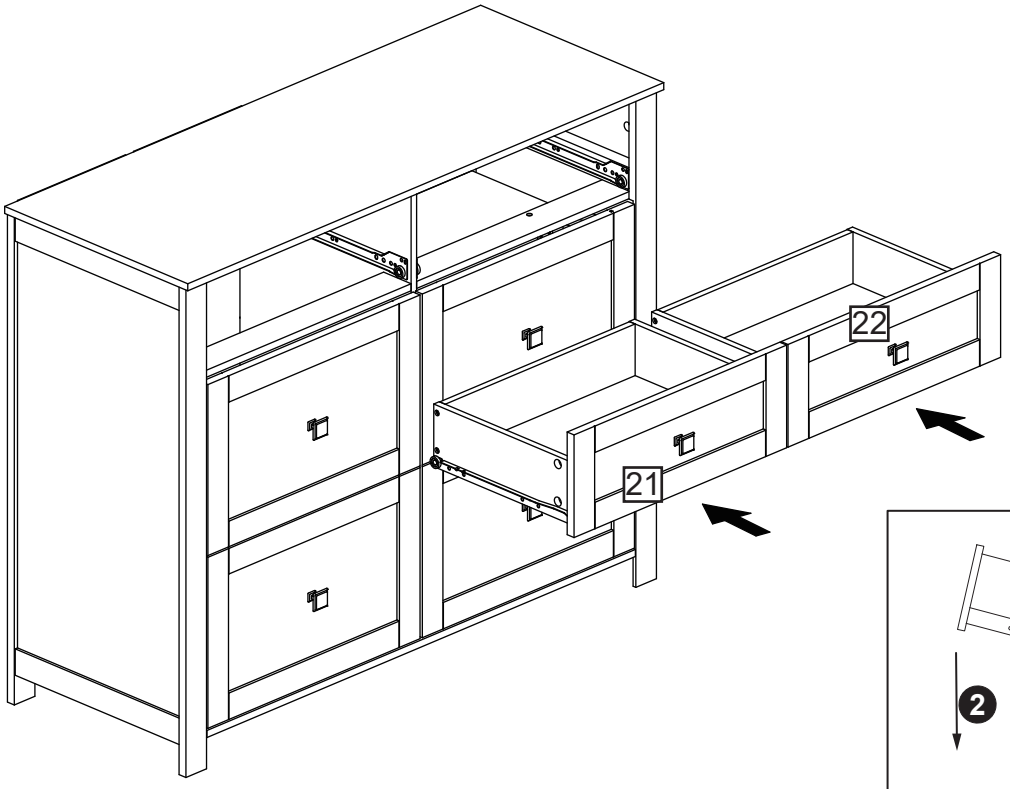

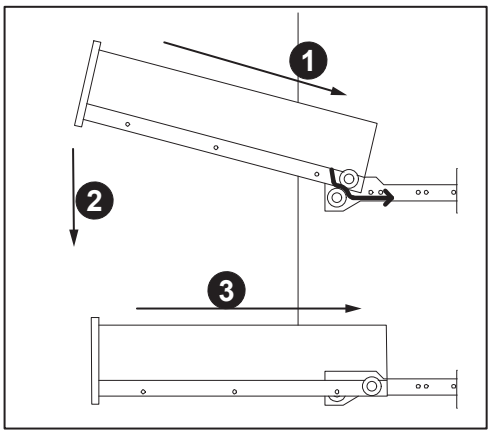

Insert the drawer into the cabinet.

A Guide to Wall Mounting & Fixings

Important note:

If plastic wall plugs (rawl plugs) are supplied with your product, e.g.:



- these are only suitable for use in masonry walls.

If you are in any doubt about the correct wall plugs for your wall, seek professional advice.

Failure of the product due to using the incorrect fixings is the responsibility of the installer.

Important: when drilling into walls always check that there are no hidden wires or pipes etc.

Make sure that the screws and wall plugs being used are suitable for **supporting your unit. Consult a qualified tradesperson if you** are unsure.

Hints:

1: General rule: always use a larger screw and wall plug if you are not sure.
2: Ensure you use the recommended drill bit to match the wall plug and hole size.
3: Ensure you drill the hole horizontally; do not force the drill or enlarge the hole.
4: Take extra care when drilling high walls, ceilings and ceramic tiles. Ensure wall plugs are inserted beyond the thickness of the ceramic tiles to avoid the tiles splitting or cracking.
5: Ensure wall plugs are well fitted and are a tight fit in the drilled hole.

Types of walls

You can use one of the following types of wall plug if your walls are made of brick, breeze block, concrete, stone or wood.

No.1 "General Purpose" wall plug

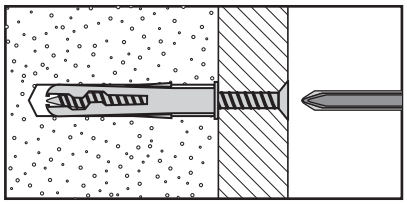

Generally aerated blocks should not be used to support heavy loads, use a specialist fitting in this case. For light loads, general purpose wall plugs can be used.

No.3 "Cavity Fixing" wall plug

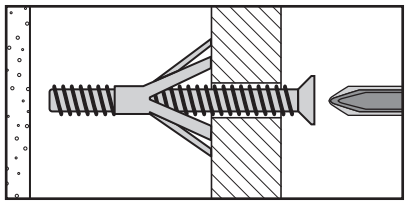

For use with plasterboard partitions or hollow wooden doors.

No.5 "Hammer Fixing" wall plug

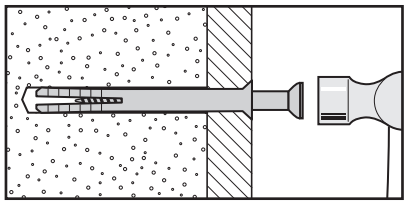

For use with walls stuck with plasterboard. The hammer fixing allows it to be fixed to the wall rather than the plasterboard. Always check the fixing is secure to the retaining wall.

No.2 " Plasterboard" wall plug

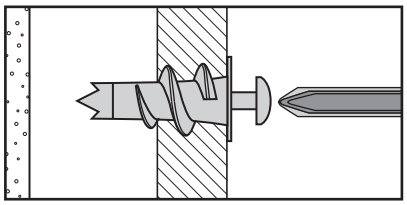

For use when attaching light loads onto plasterboard partitions.

No.4 " Cavity Fixing – Heavy Duty" wall plug

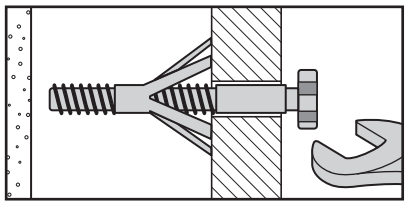

For use when fitting or supporting heavy loads such as shelving, wall cabinets and coat racks.

No.6 " Shield Anchor" wall plug – heavy loads

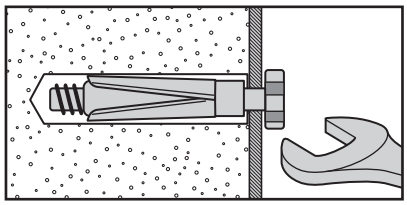

For use with heavier loads such as TV and HiFi speakers and satellite dishes etc.

Care & Maintenance

Safety: always check the fitting and location to ensure your safety in and around the home.

Fitting: from time to time check the fitting to ensure the wall plugs or screws do not become loose.