ASSEMBLY INSTRUCTIONS

CORNER TWIN BED WITH STORAGE BOX, TRUNDLE AND DRAWER

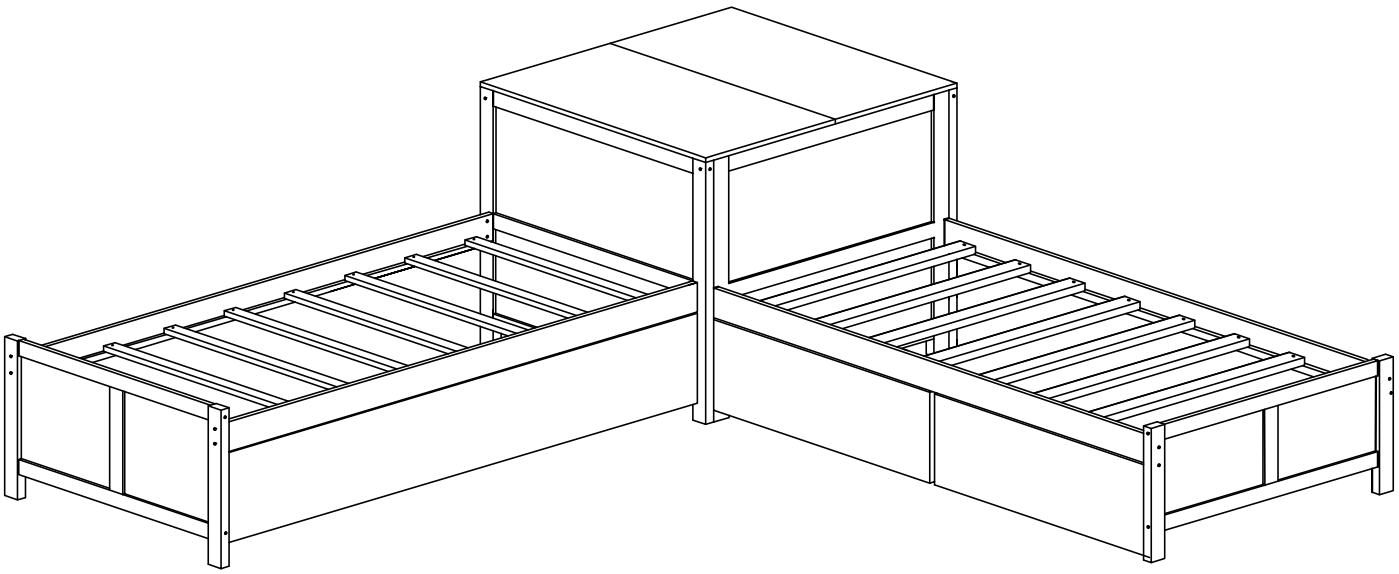

WF299091/WF299092

Detail View

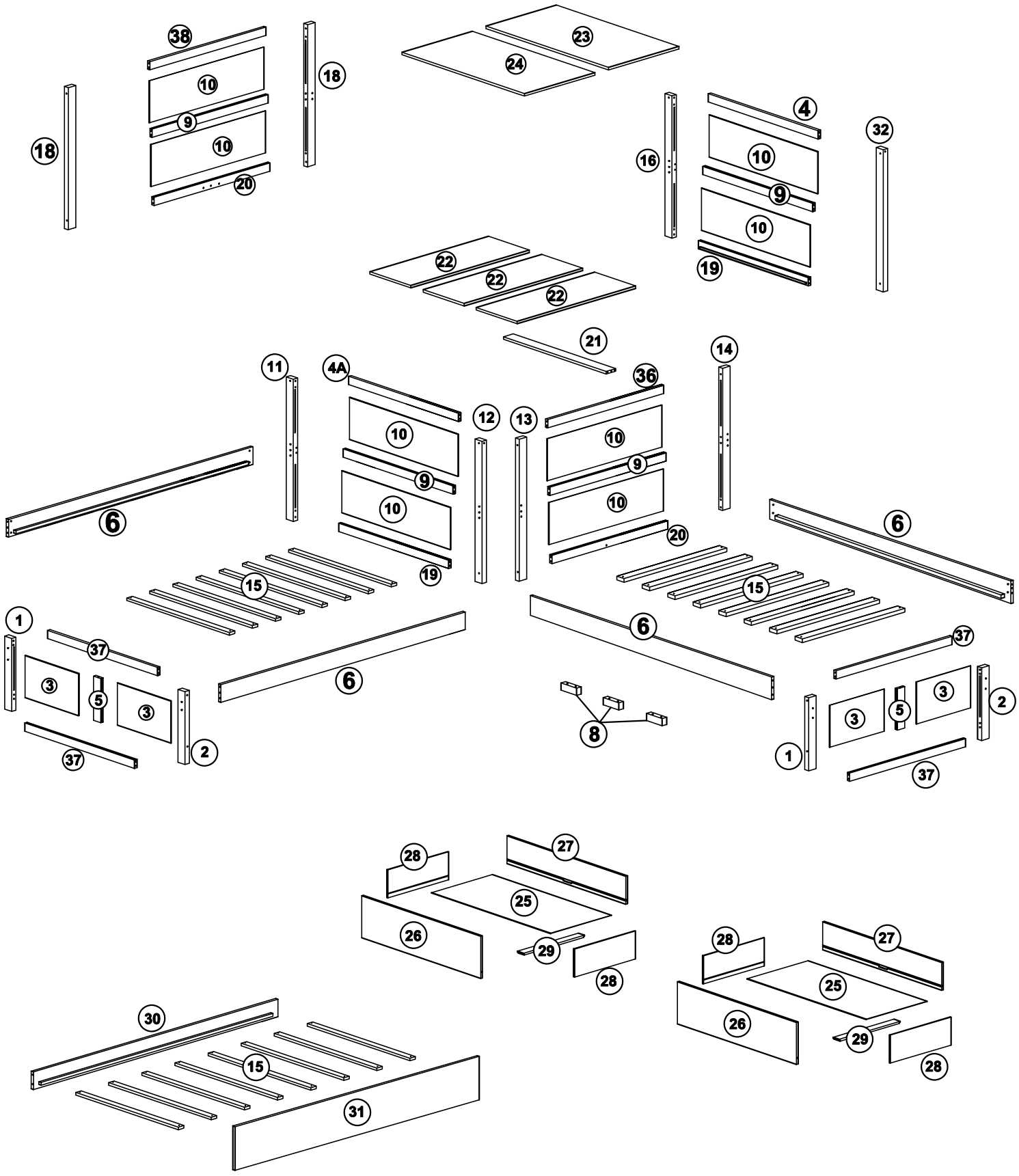
38
18
10
9
10
20
18
23
24
4
16
10
9
10
19
32
22
22
22
21
11
4A
36
14
12
13
10
9
10
19
10
9
10
20
6
6
15
15
1
37
3
5
3
37
2
6
6
8
37
3
5
3
2
1
37
28
27
25
26
29
28
28
27
25
26
29
28
30
15
31

Part List: WF299091

1 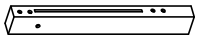	2 	3 
Upper legs (right) - 2pcs	Upper legs (left) - 2pcs	Front panel - 4pcs
8 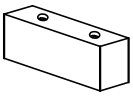	9 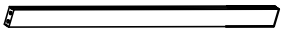	10 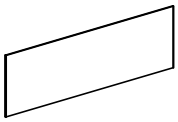
Wood block - 3pcs	Middle bar - 4pcs	Back panel - 8pcs
18 	22 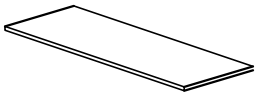	29 
Back leg (left) -1pc	Bottom frames - 3pcs	Support tree - 2pcs
23 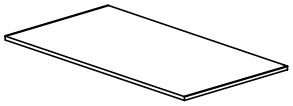	24 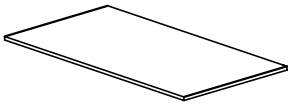	25 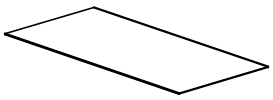
Top panel - 1pcs	Top panel - 1pcs	Bottom drawer - 2pcs
26 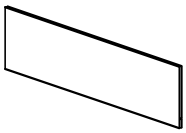	27 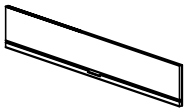	28 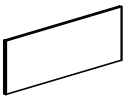
Drawer front - 2pcs	Drawer back panel - 2pcs	Drawer side panel - 4pcs

Part List: WF299092

4 	5 	6 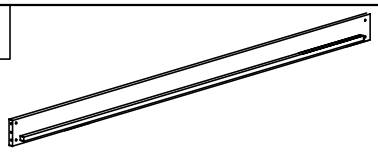
Top horizontal bar - 1pc	Center vertical bar - 2pcs	Side rail (L/R) - 4pcs
13 	11 	12 
Back leg (left) -1pc	Back leg (left) - 1pc	Back leg (right) - 1pc
18 	14 	16 
Back leg (right) -1pc	Back leg (right) -1pc	Back leg (left) -1pc
21 	19 	20 
Support tree - 1pc	Bottom horizontal bar - 2pcs	Bottom horizontal bar - 2pcs
32 	30 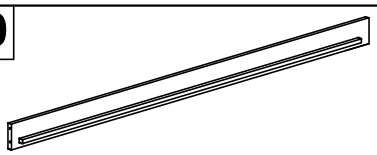	31 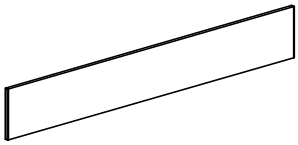
Back leg (right) - 1pc	Drawer back - 1pc	Drawer front - 1 pc
37 	33 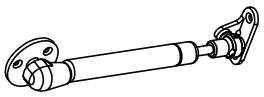	36 
Upper horizontal bar - 4pcs	Pittong (2pcs)	Top horizontal bar (left) - 1pcs
4A 	15 	38 
Top horizontal bar - 1pc	Slats - 24pcs	Top horizontal bar (right)- 1pcs

Hardware List: WF299091

A 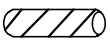 Ø10 x 30mm Wood dowel (64pcs)	**B** 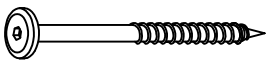 Ø1/4" x 85mm Hex-Head bolts (16pcs)	**C**  (Ø15)1/4" x 80mm Bolts (8pcs)
D  1/4"*15 (11.5mm) Horizontal-Hole bolts(16pcs)	**E** 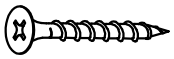 Ø4*30mm Wood screws (70pcs)	**F** 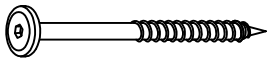 Ø1/4" x 100mm Hex-Head bolts (8pcs)
G 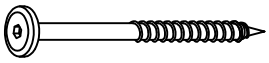 Ø1/4" x 50mm Hex-Head bolts (21pcs)	**H**  4*58mm Allen key (1pcs)	**J** 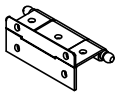 Hinge (2pcs)
K  Ø3.5 x 15mm Screws (24pcs)	**M** 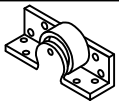 Ø35mm Small Wheel (12pcs)	**Q**  (Ø15)1/4" x 65mm Bolts (8pcs)
N  60 x 20 x 2mm Pass L (3pcs)	**T**  Ø4 x 15mm Screws (28pcs)	**V**  Ø3.5 x 12mm Screws (20pcs)

ASSEMBLY TOOLS REQUIRED (NOT INCLUDED)

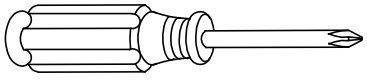

PLEASE BE CAREFUL DO NOT DAMAGE THE HOLE POSITION WHEN YOU USE POWER TOOLS !

STEP 1:

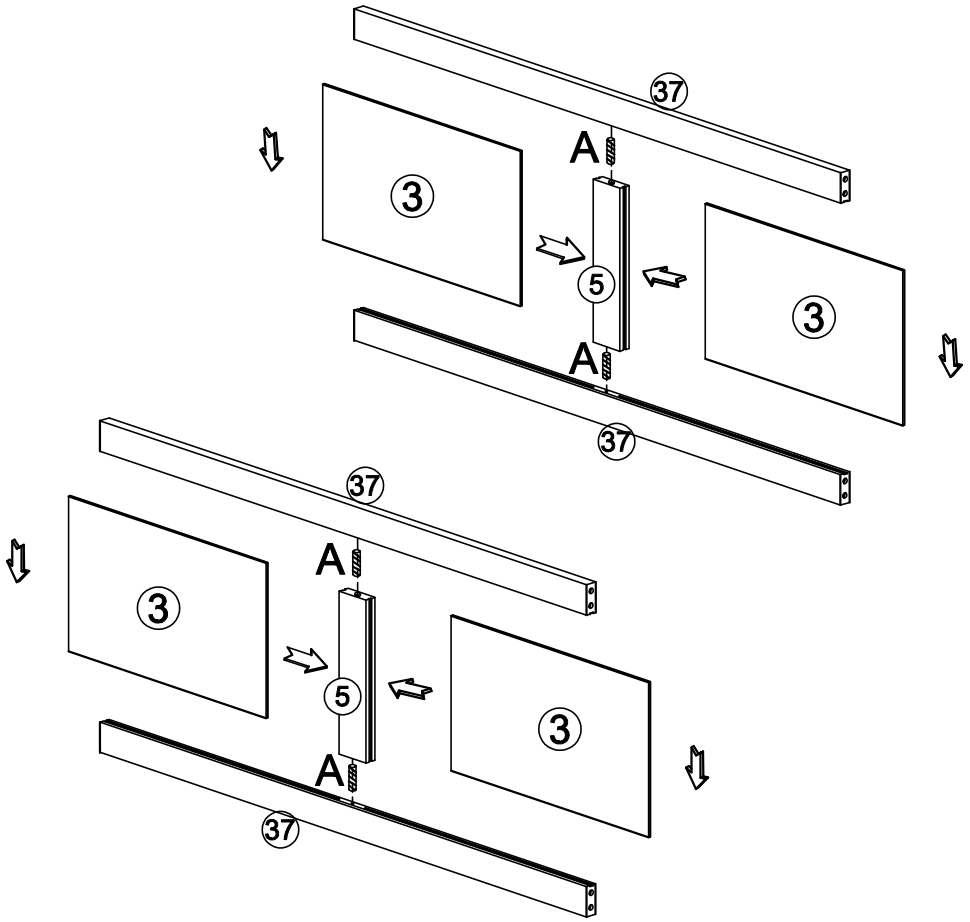
A
4PCS
37
A
3
5
3
A
37
37
A
3
5
3
A
37

STEP 2:

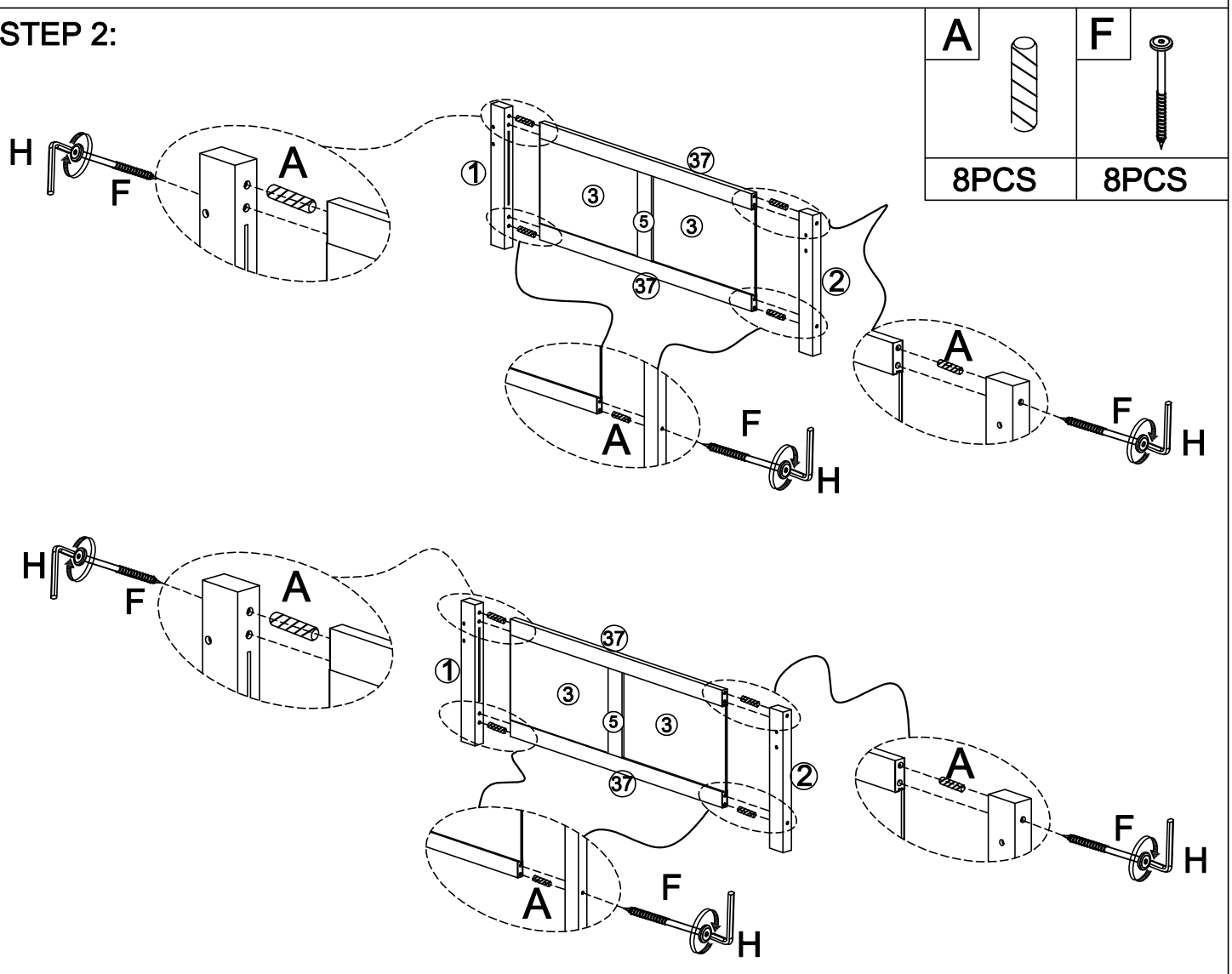
A
8PCS
F
8PCS
H
F
A
1
37
3
5
3
37
2
A
F
H
A
F
H
H
F
A
1
37
3
5
3
37
2
A
F
H
A
F
H

STEP 3:

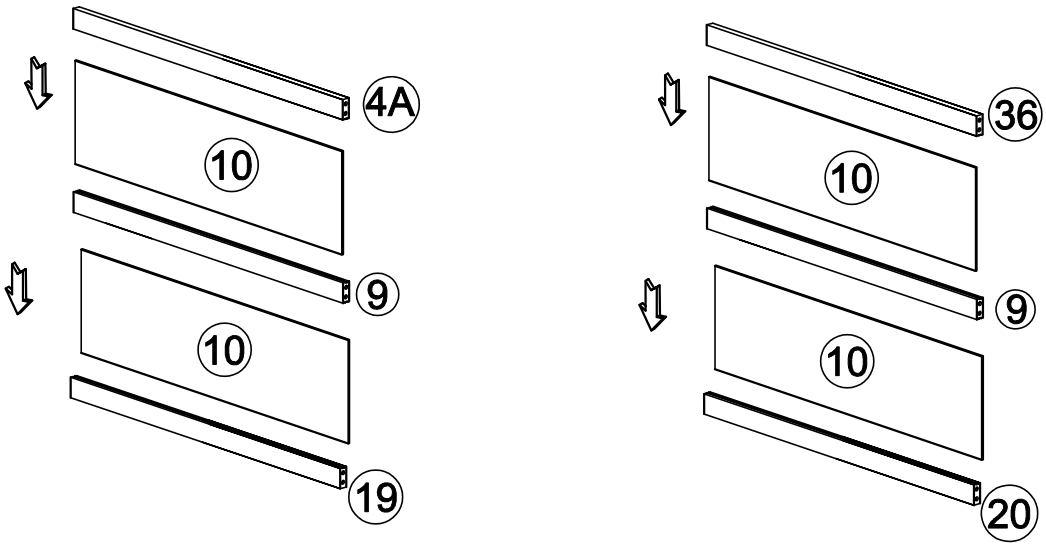

STEP 4:

A	B
8PCS	4PCS

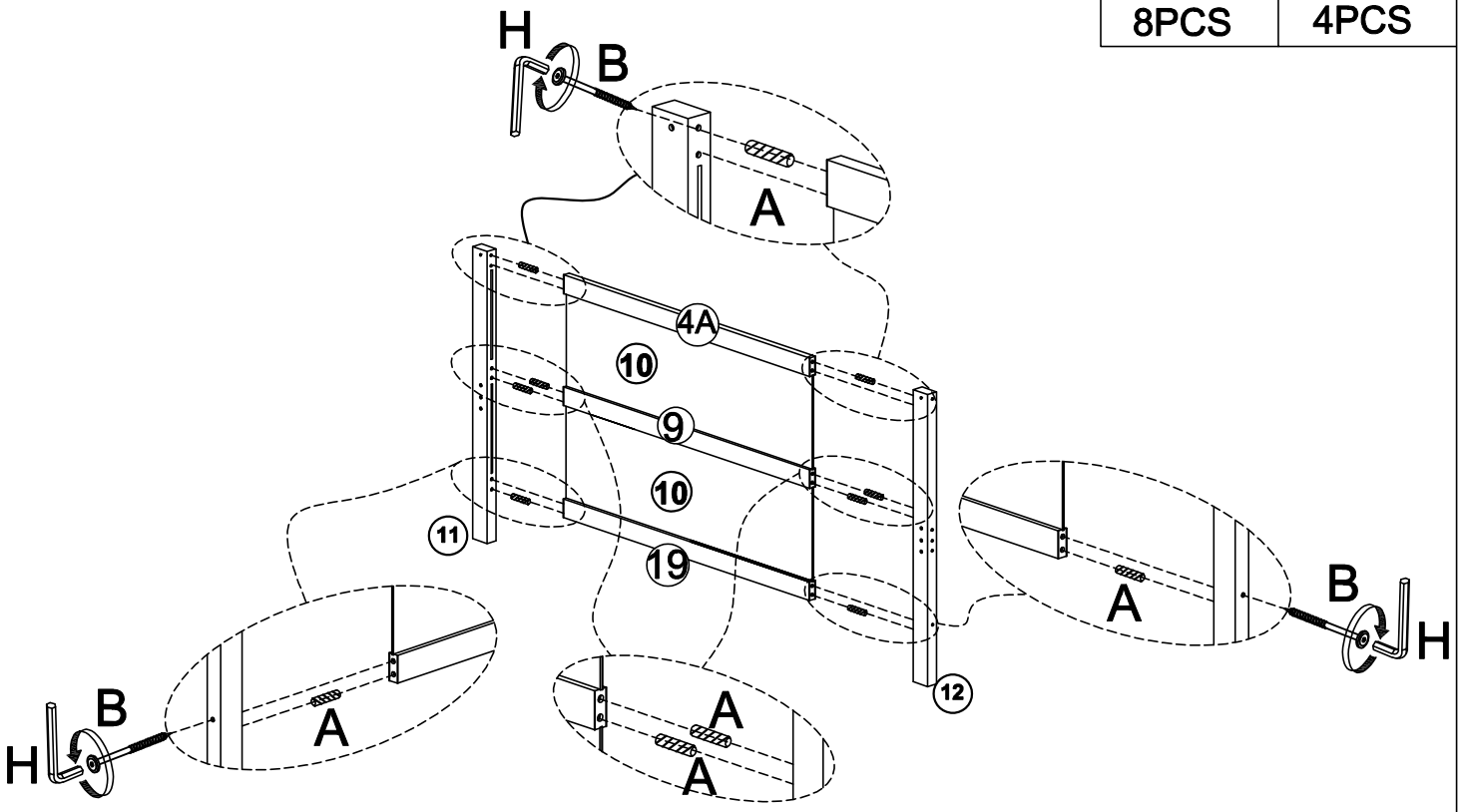

STEP 5:

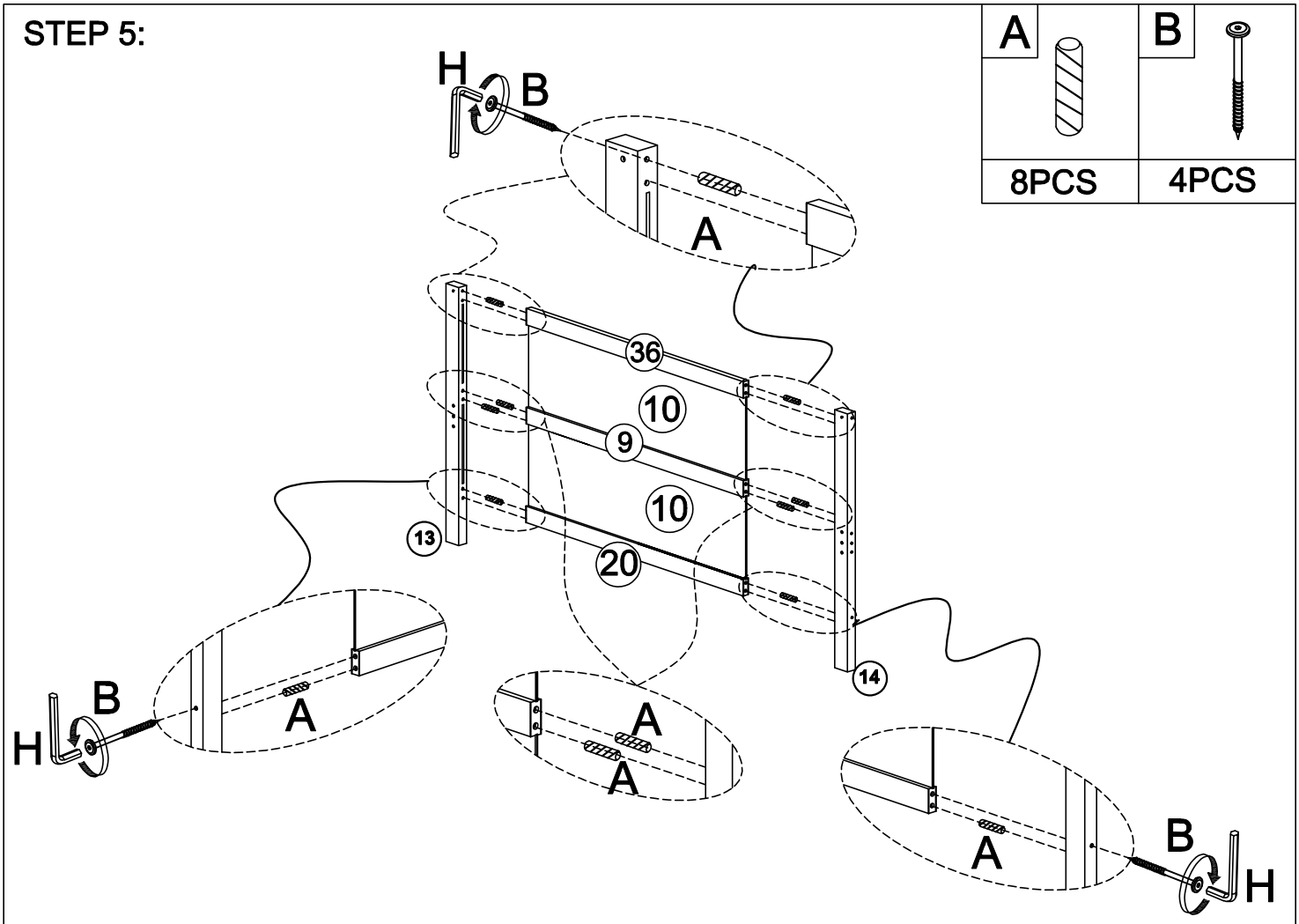

STEP 6:

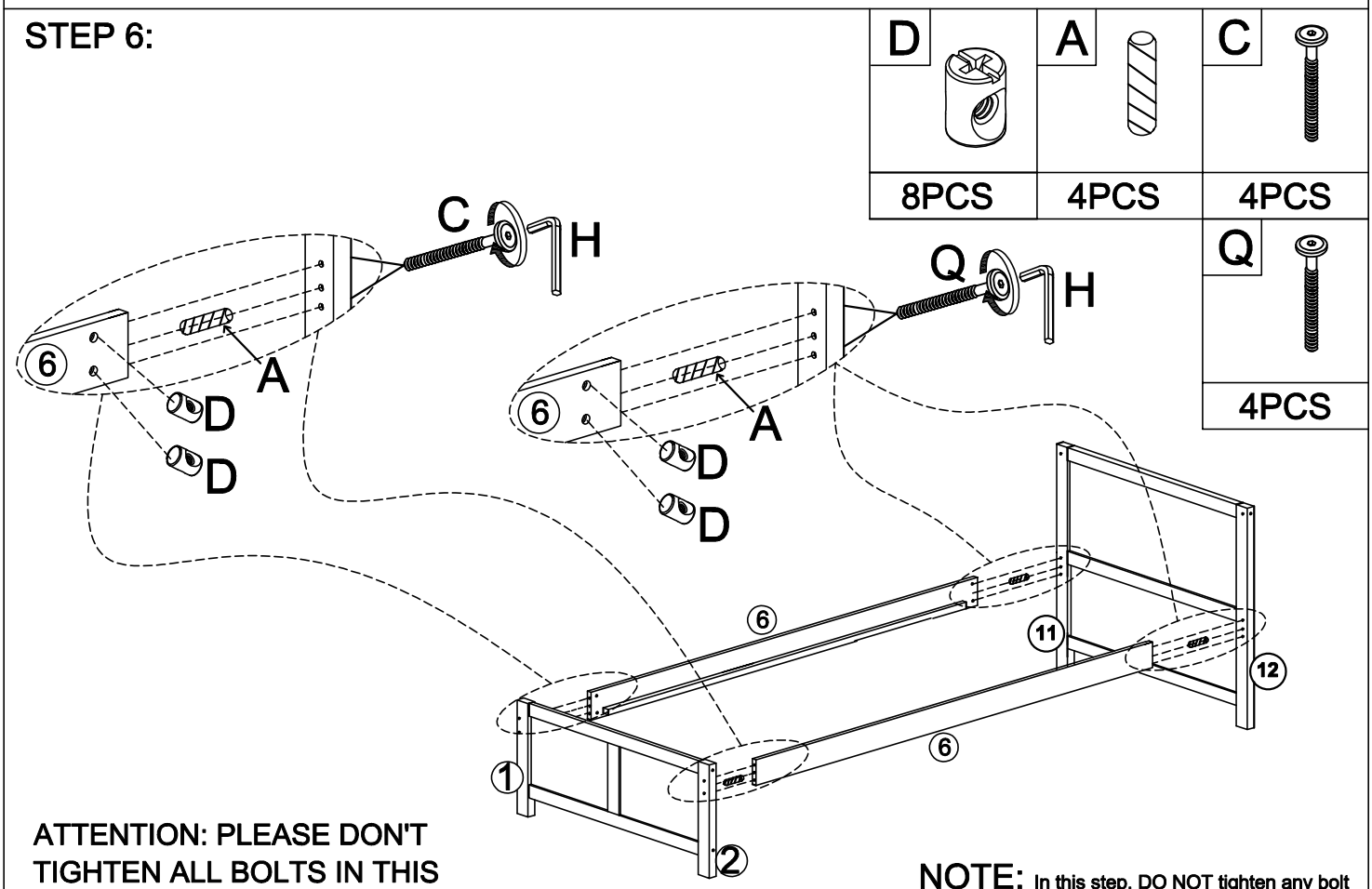

ATTENTION: PLEASE DON'T TIGHTEN ALL BOLTS IN THIS STEP, JUST TIGHTEN 80%

NOTE: In this step, DO NOT tighten any bolt until you connect all part together

STEP 7:

E
6PCS

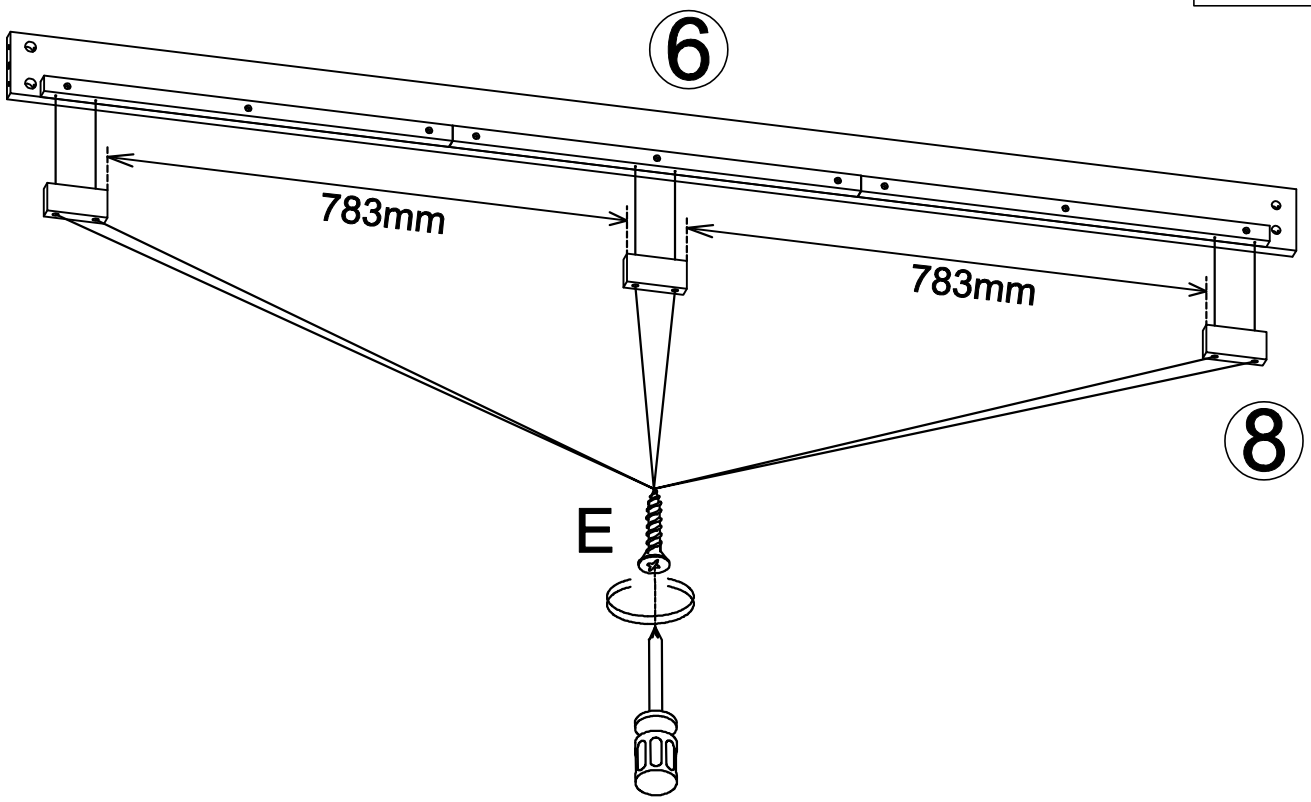

STEP 8:

Q	A	C	D
4PCS	4PCS	4PCS	8PCS

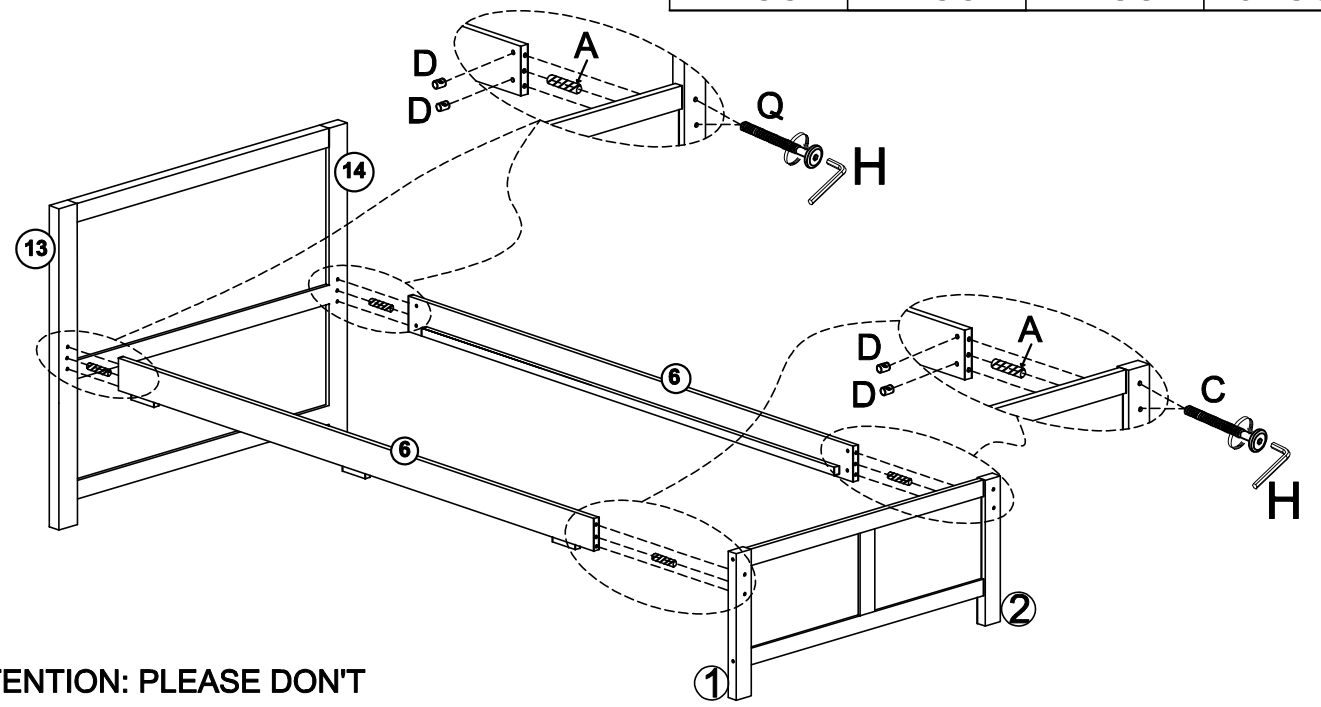

ATTENTION: PLEASE DON'T TIGHTEN ALL BOLTS IN THIS STEP, JUST TIGHTEN 80%

NOTE: In this step, DO NOT tighten any bolt until you connect all part together

STEP 9:

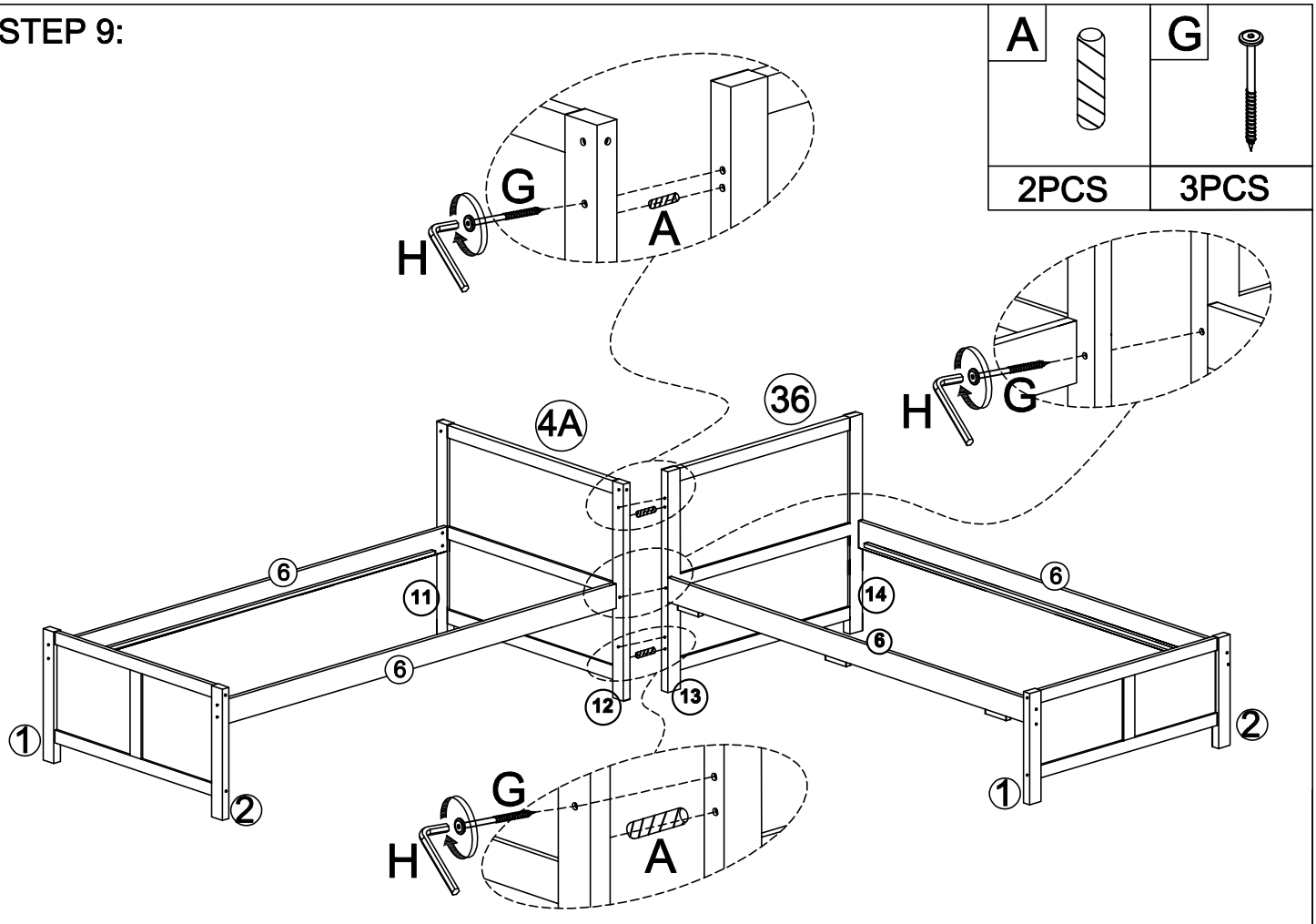

STEP 10:

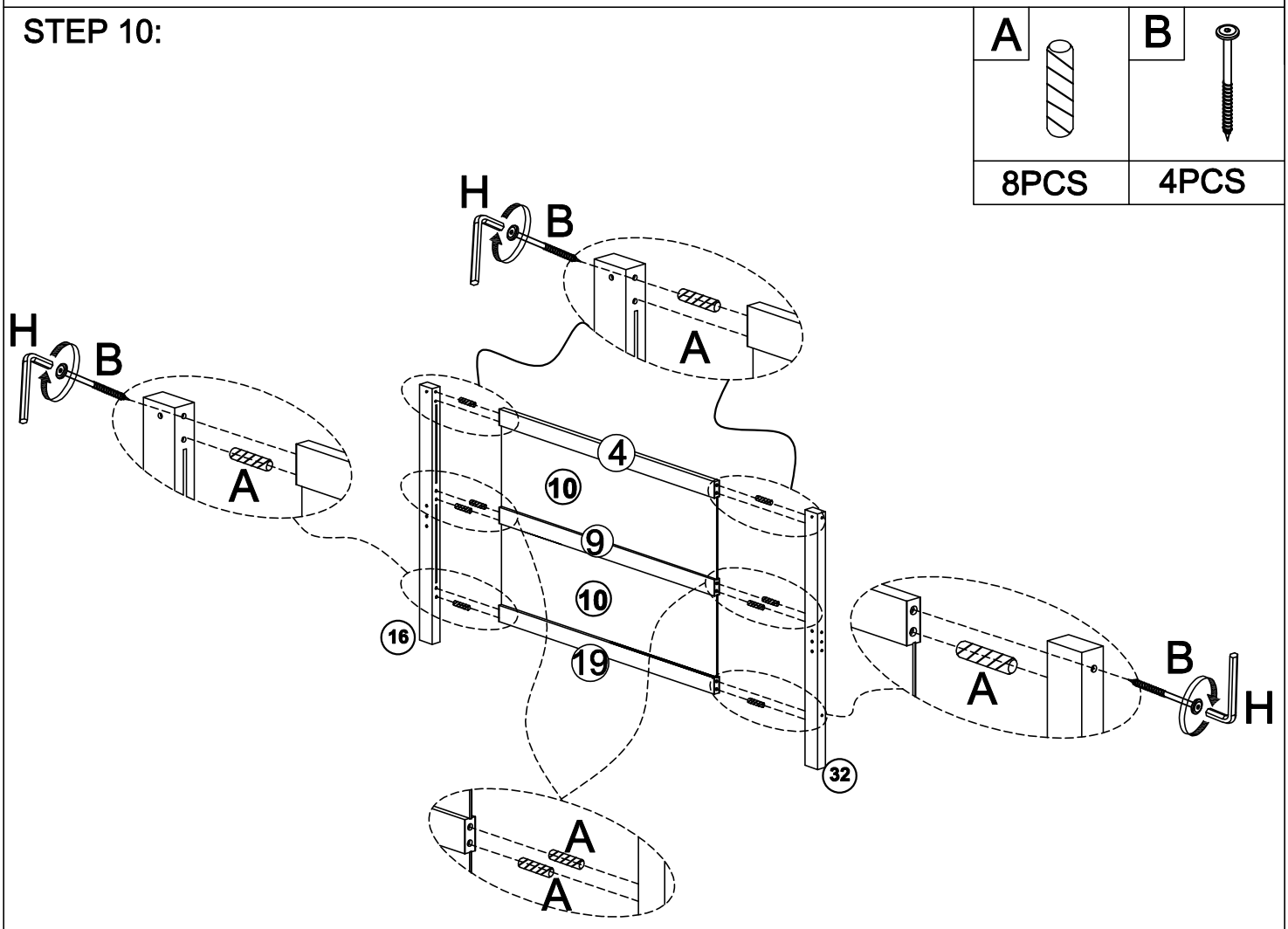

STEP 11:

A	B
8PCS	4PCS

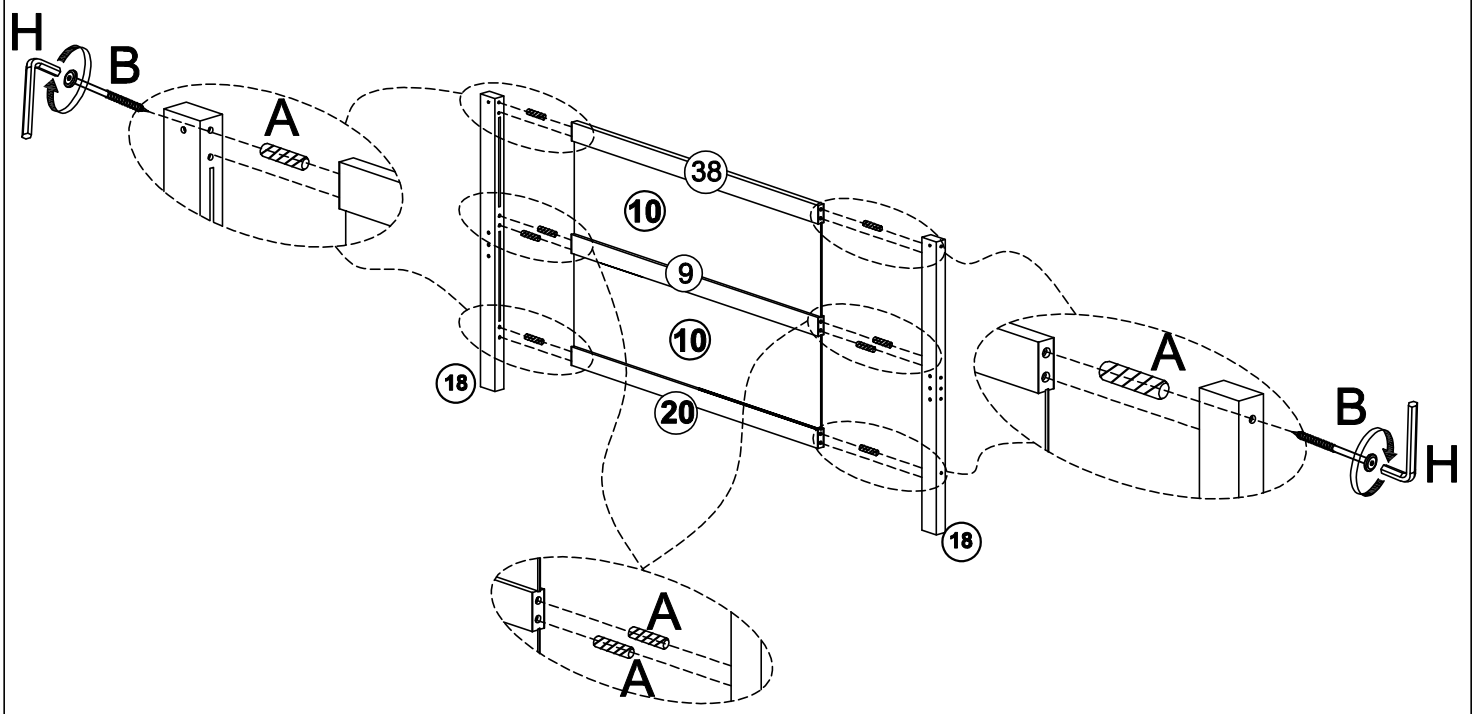

STEP 12:

A	G
2PCS	3PCS

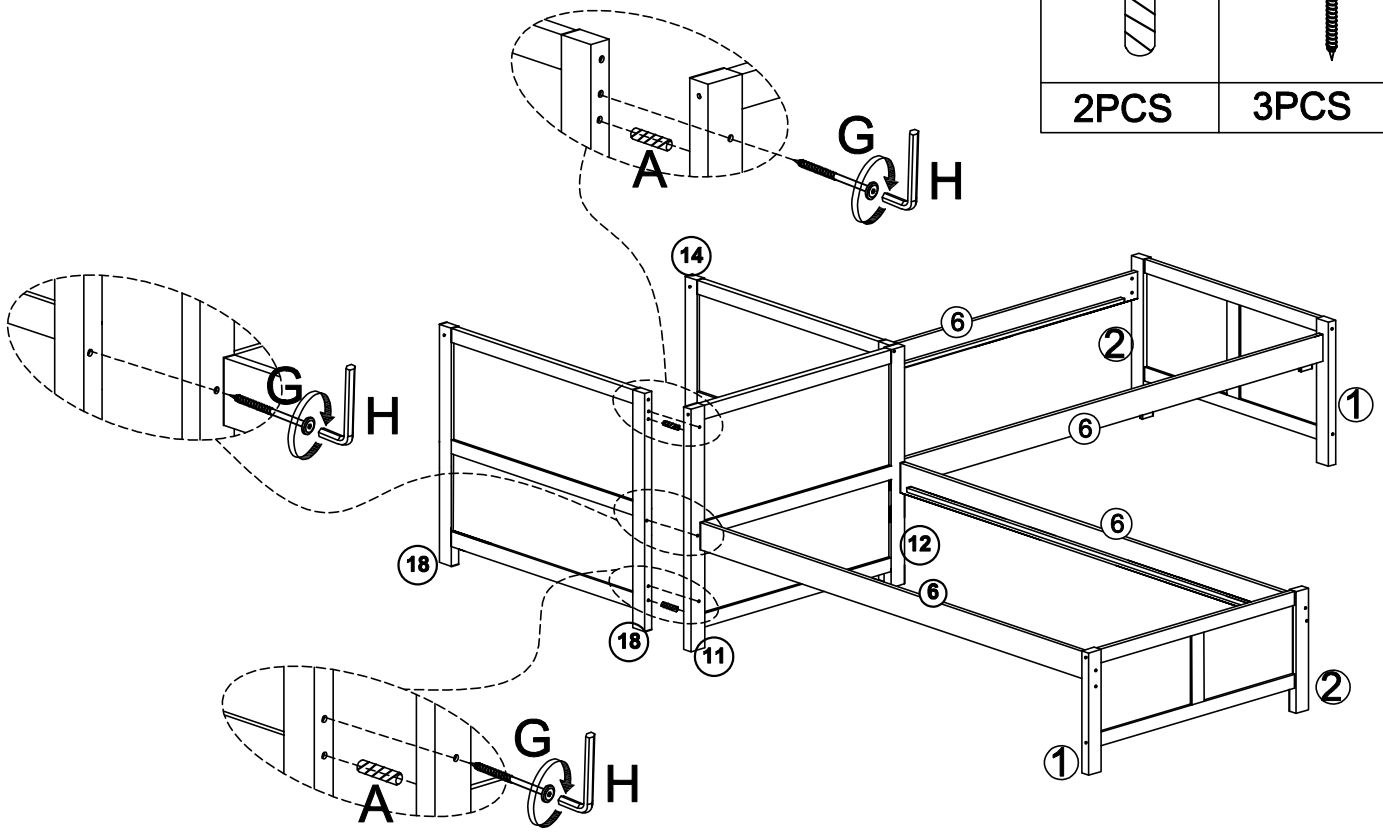

STEP 13:

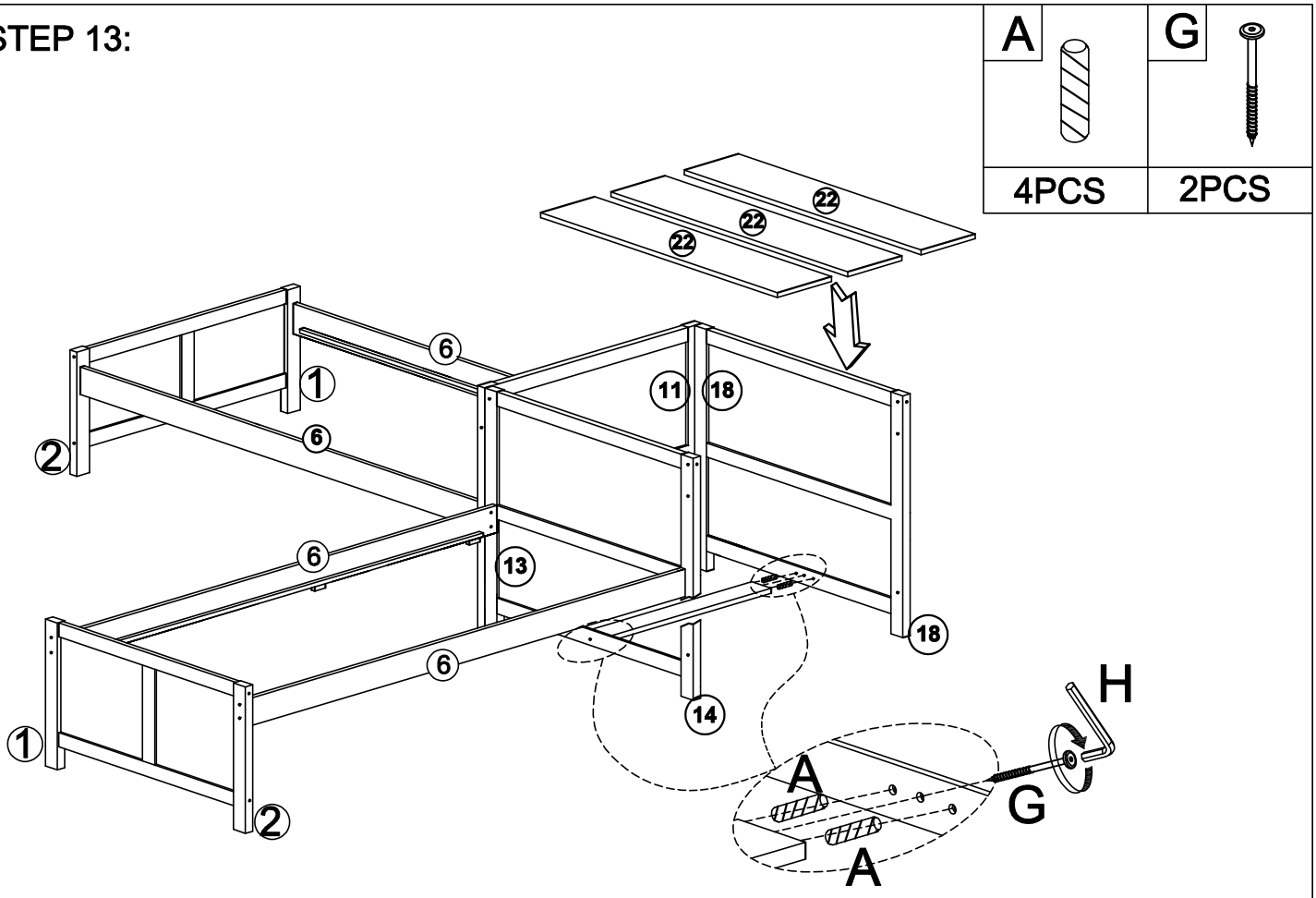

STEP 14:

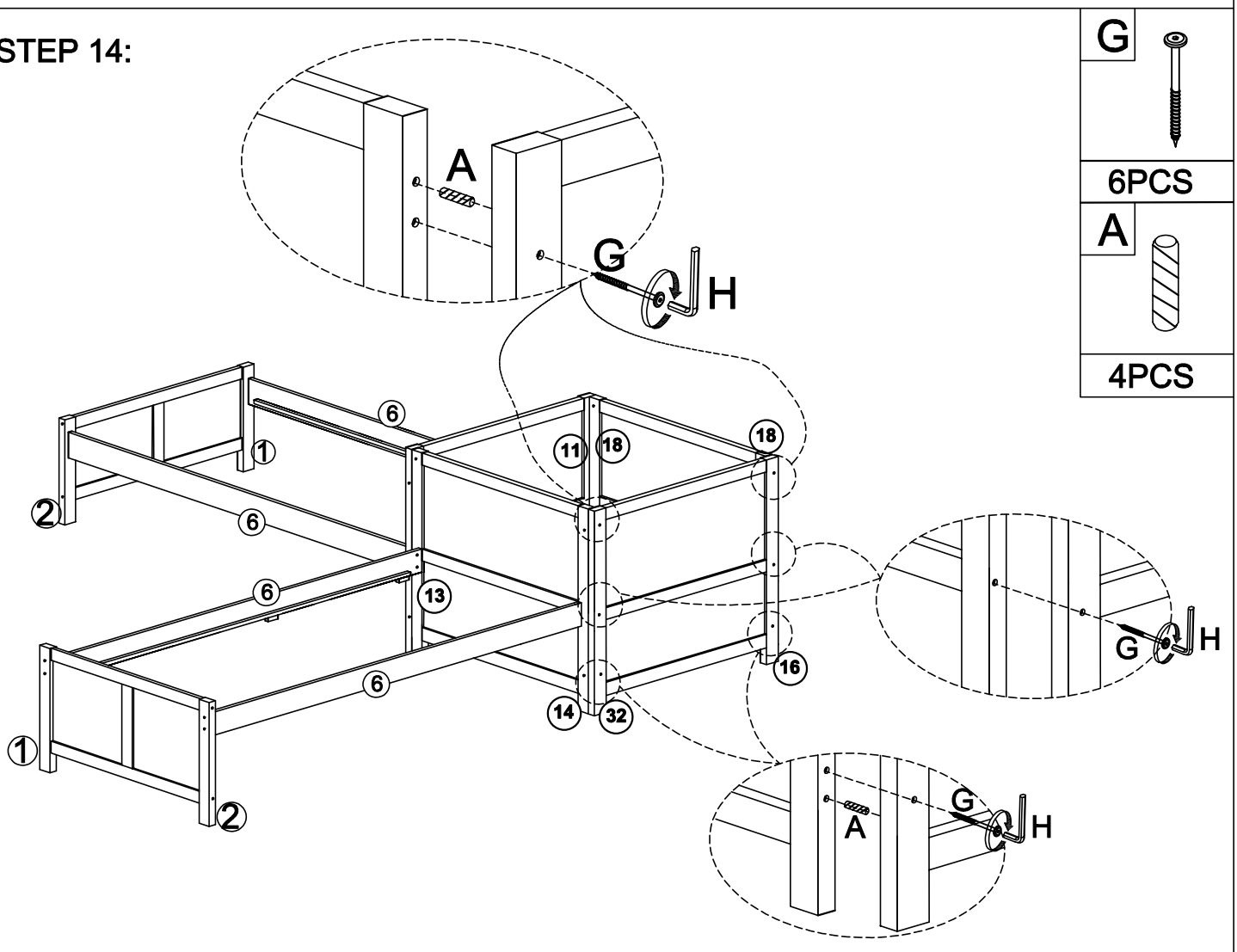

STEP 15:

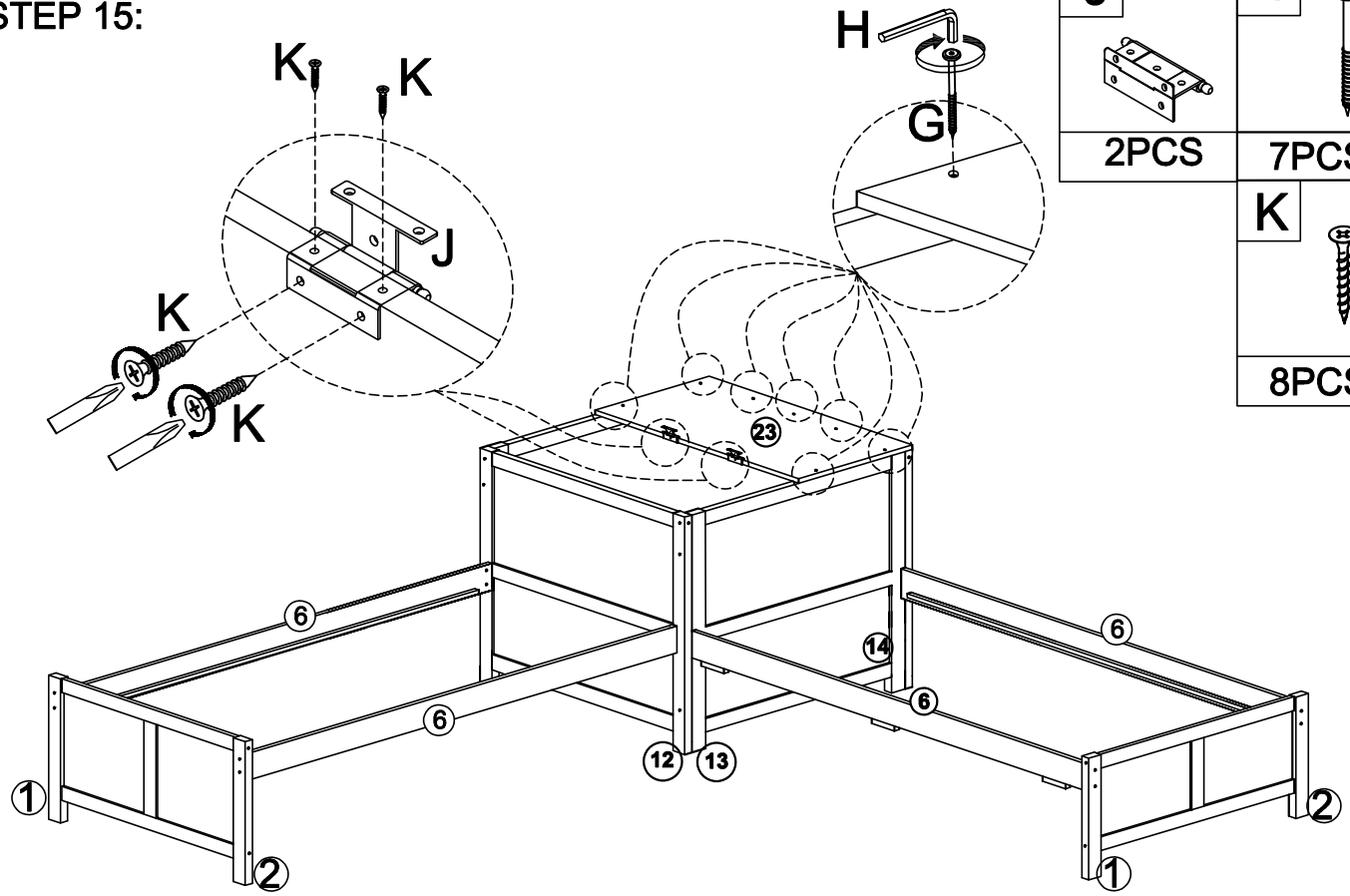

J	G	K
2PCS	7PCS	8PCS

STEP 16:

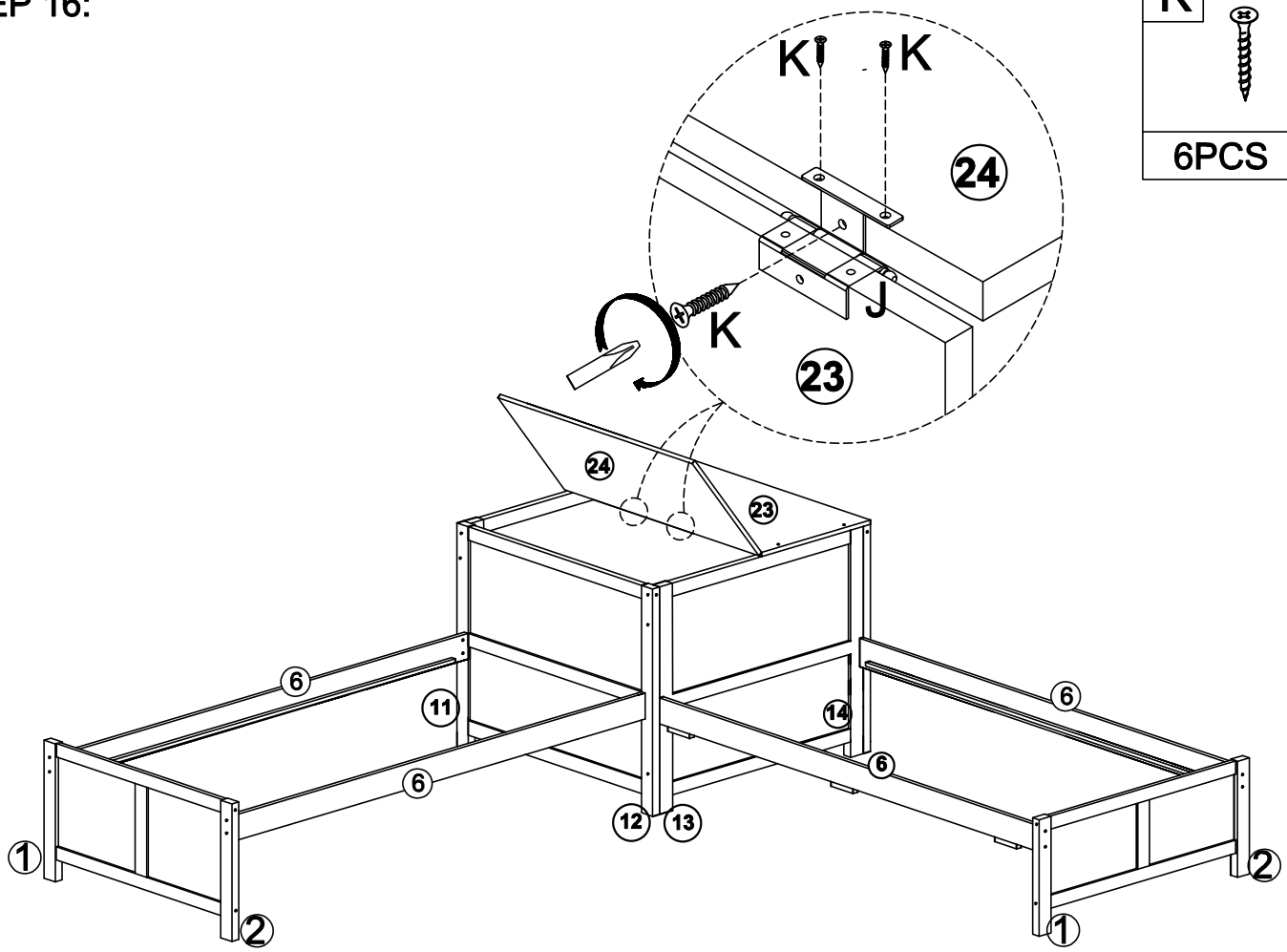

K
6PCS

STEP 17:

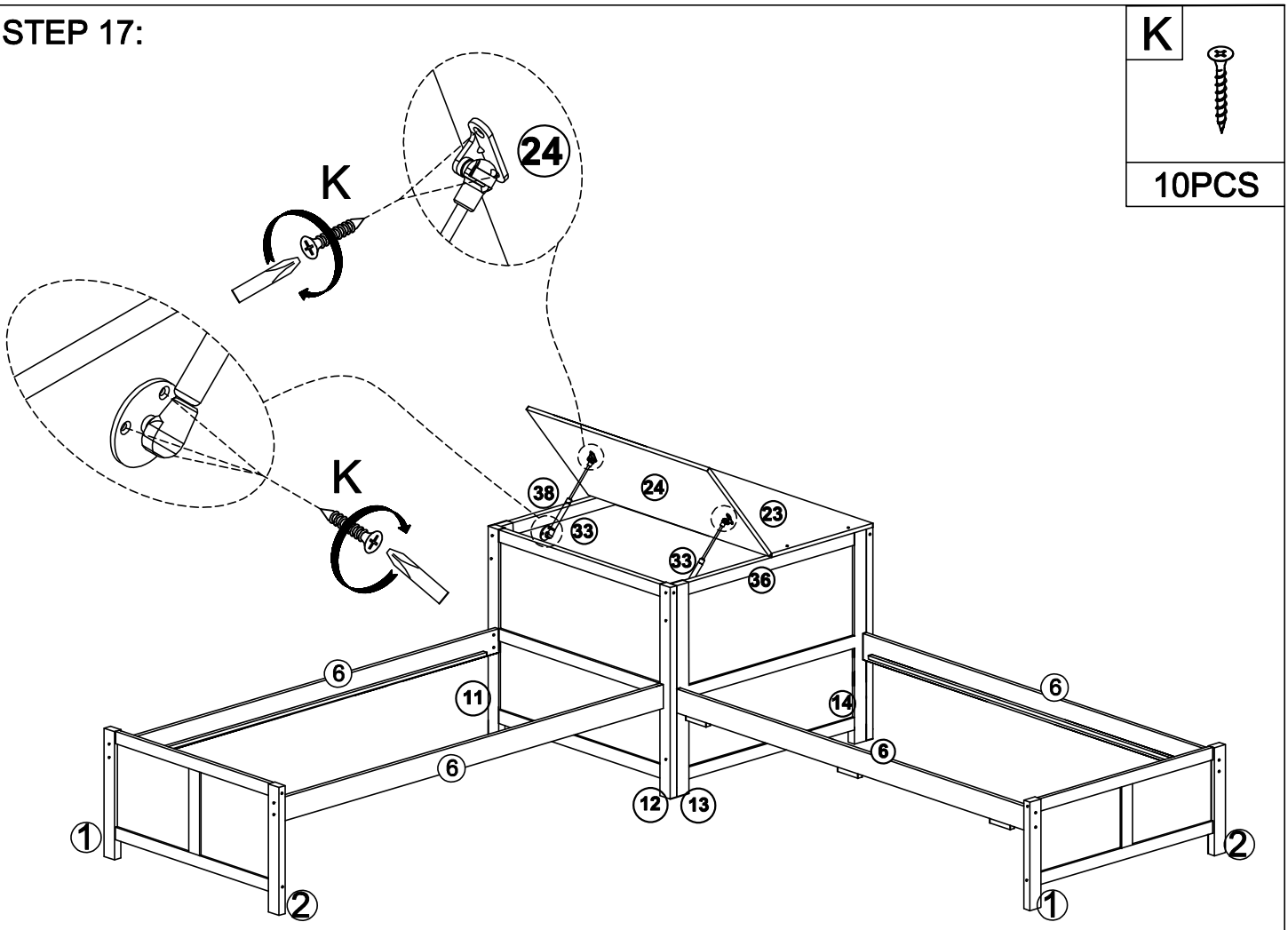

STEP 18:

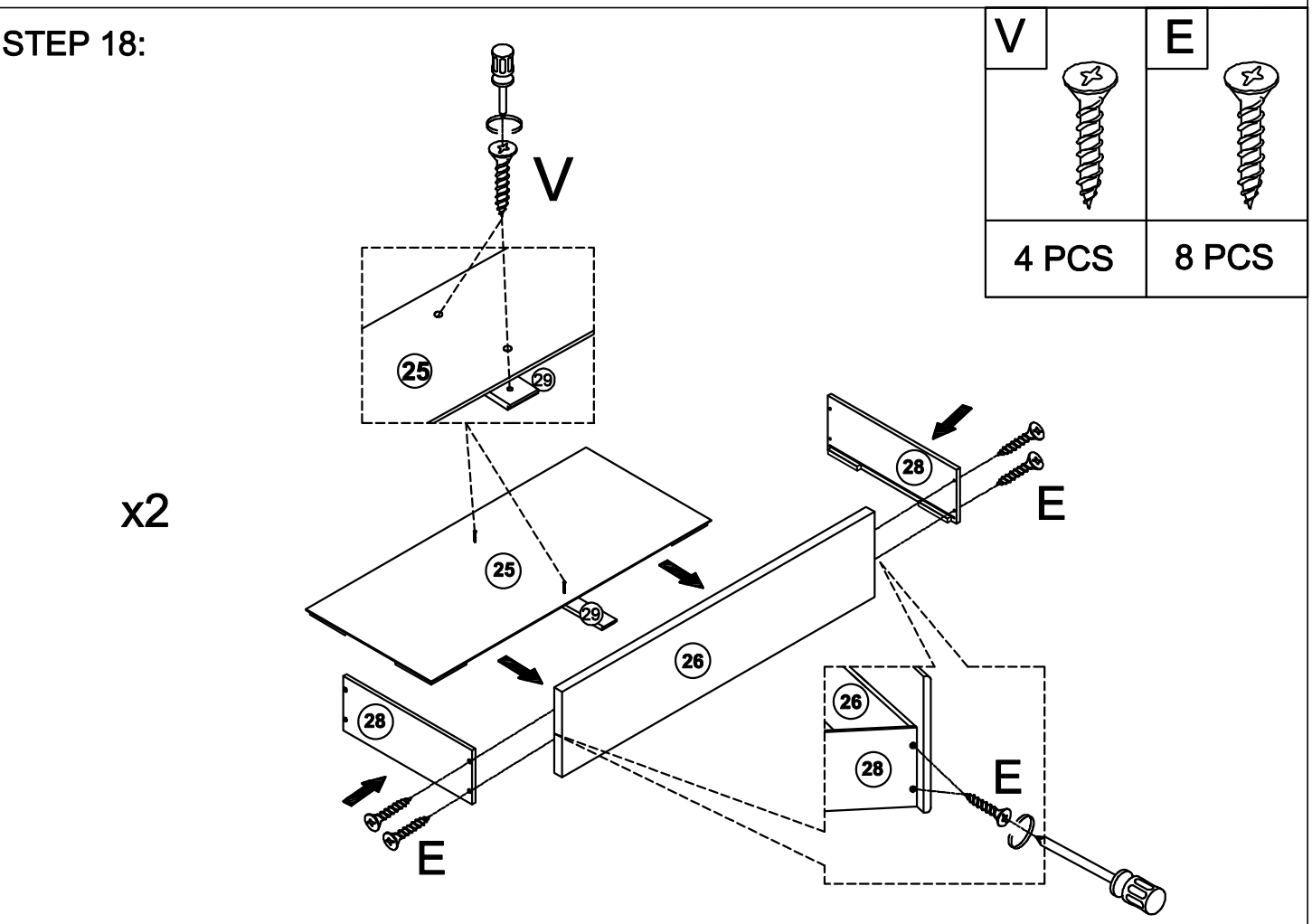

STEP 19:

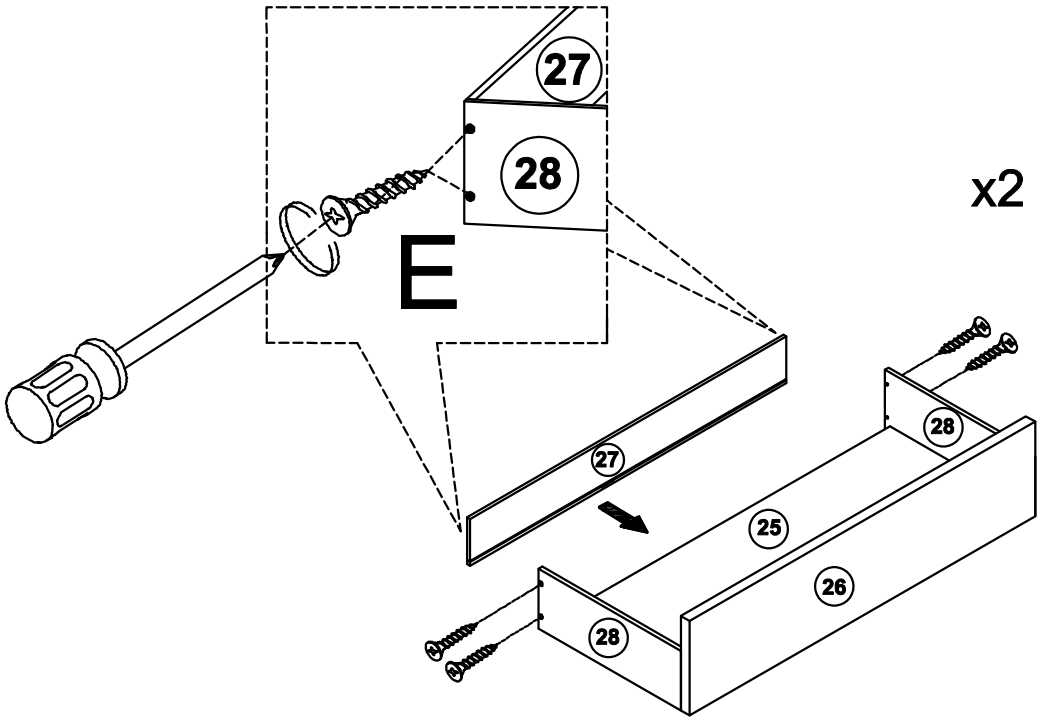

E

8 PCS

STEP 20:

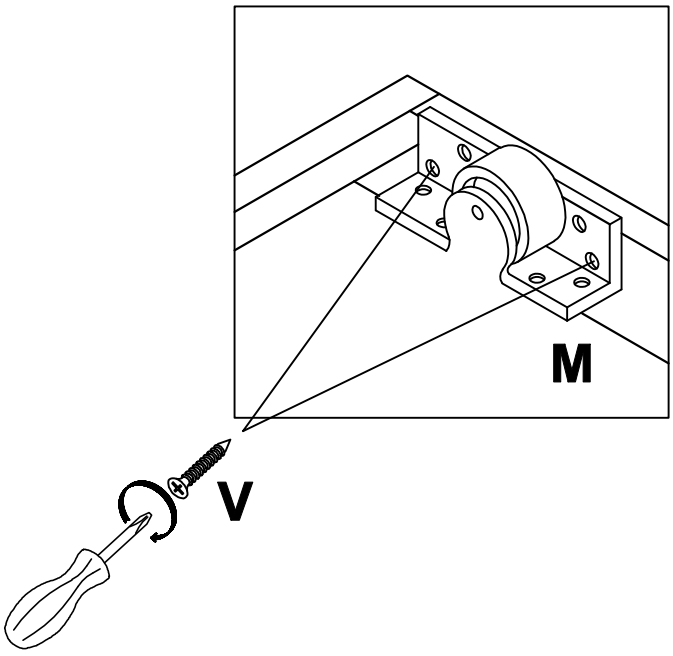

x2

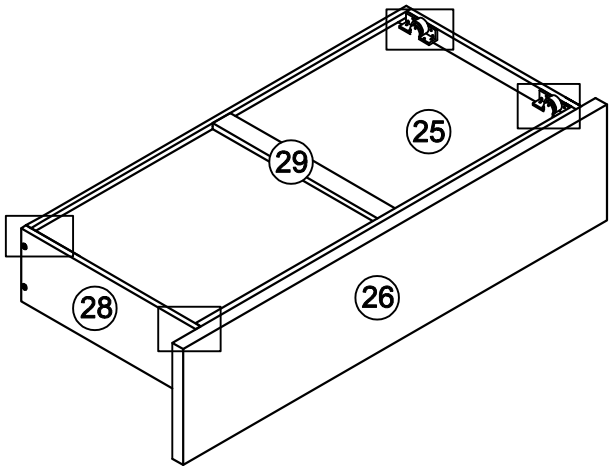

M	V
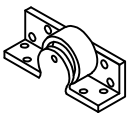	
8 PCS	16 PCS

STEP 21:

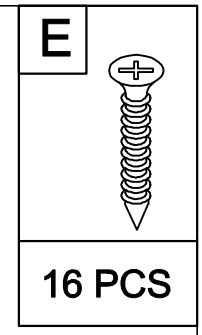

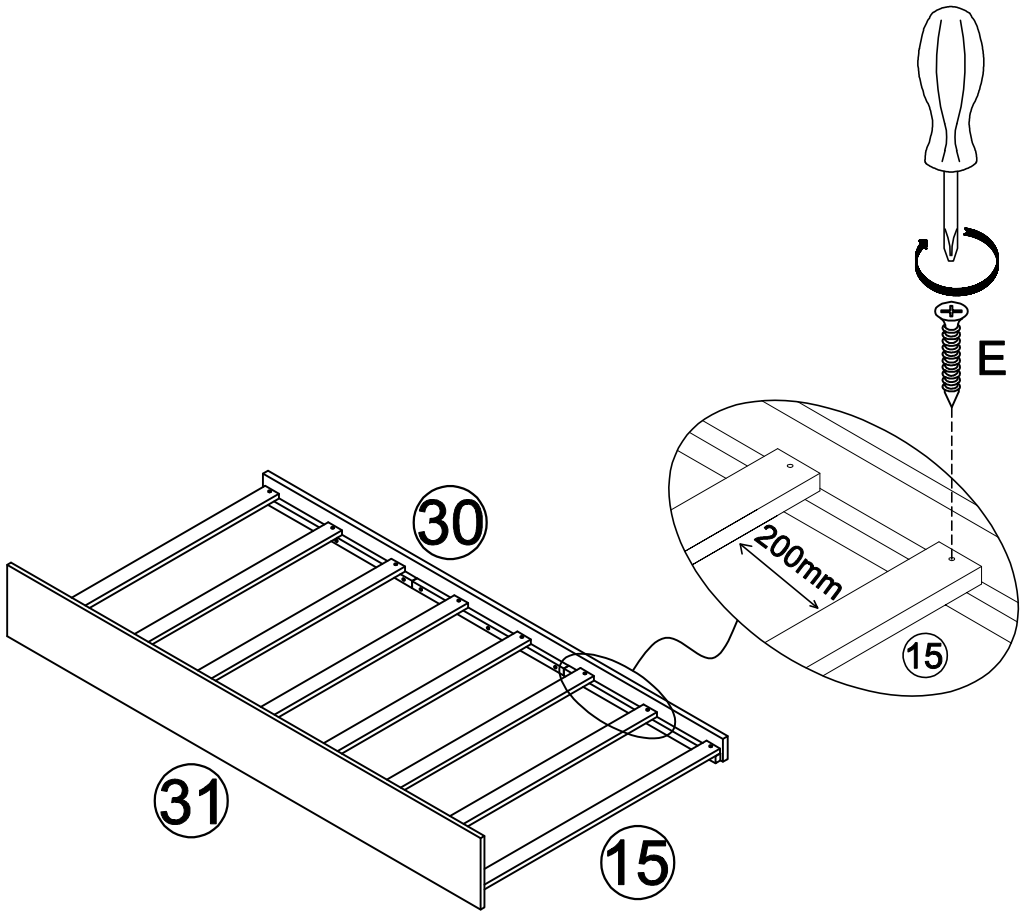

STEP 22:

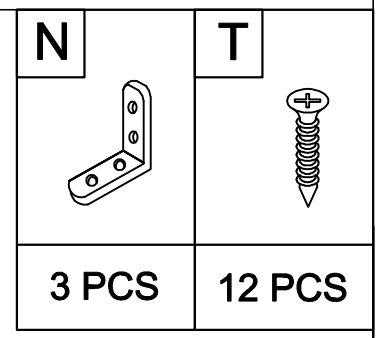

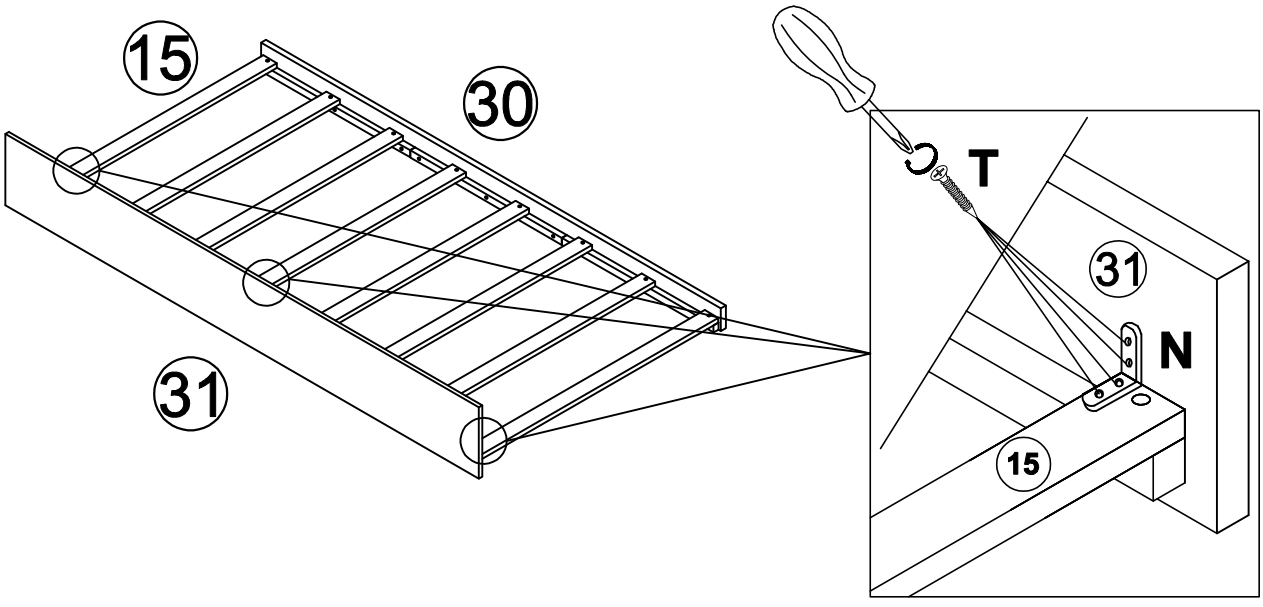

STEP 23:

M	T
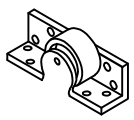	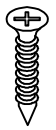
4 PCS	16 PCS

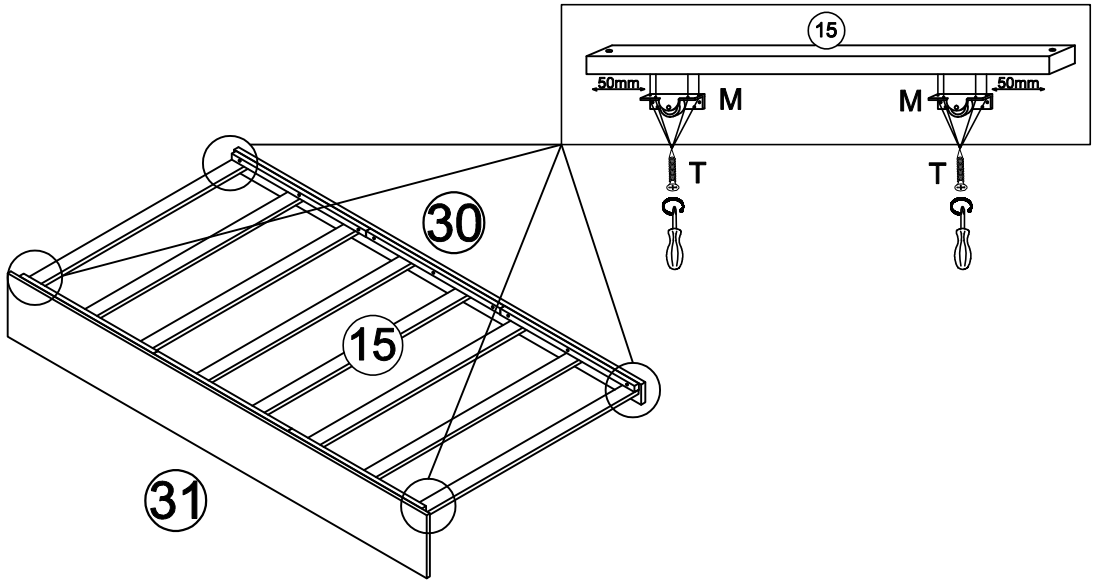

STEP 24:

E

32 PCS

STEP 1: PULL SIDE RAIL CLOSE TOGETHER ENOUGH TO FIT THE SLATS

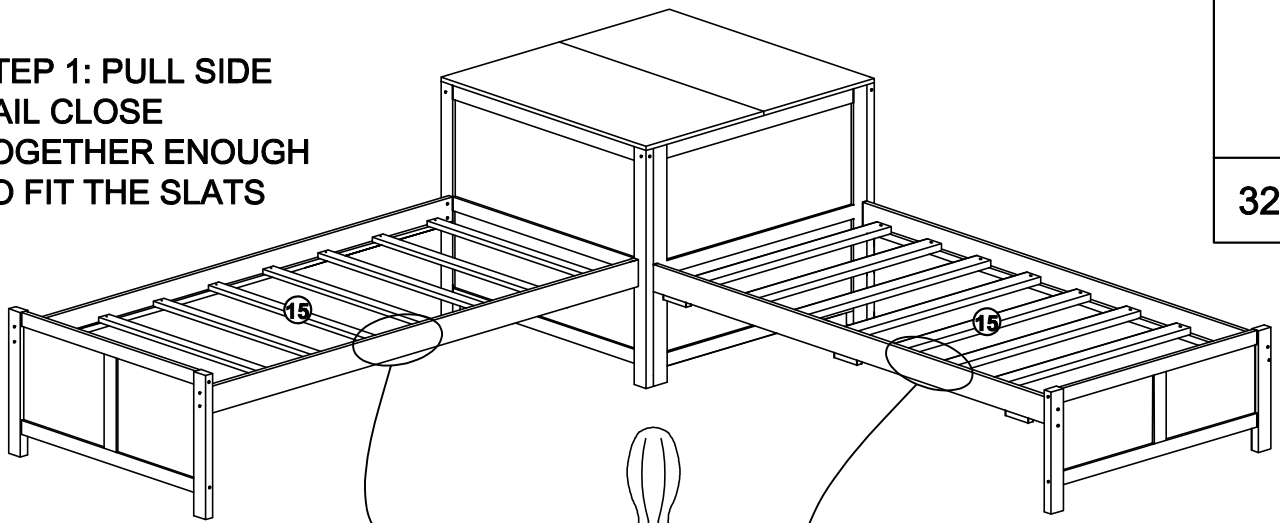

STEP 3: TIGHTEN 100% ALL HEXAGON BOLTS

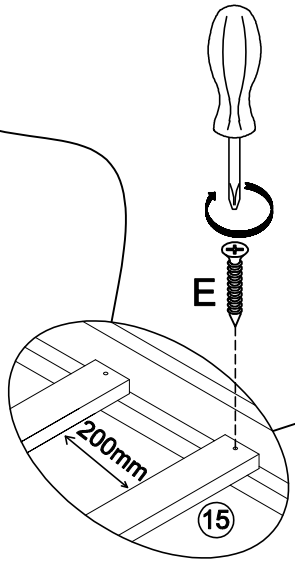

STEP 2: SCREW ALL SLATS

STEP 25:

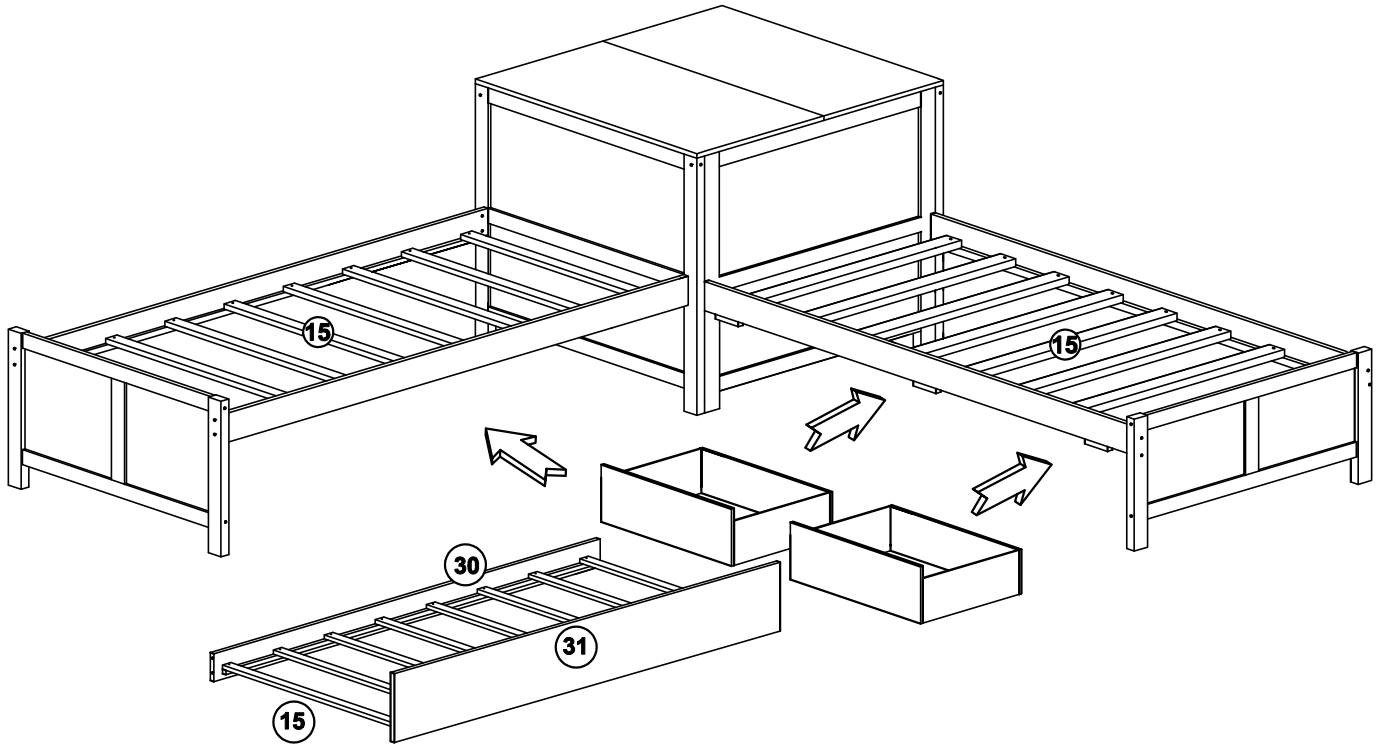

COMPLETE

