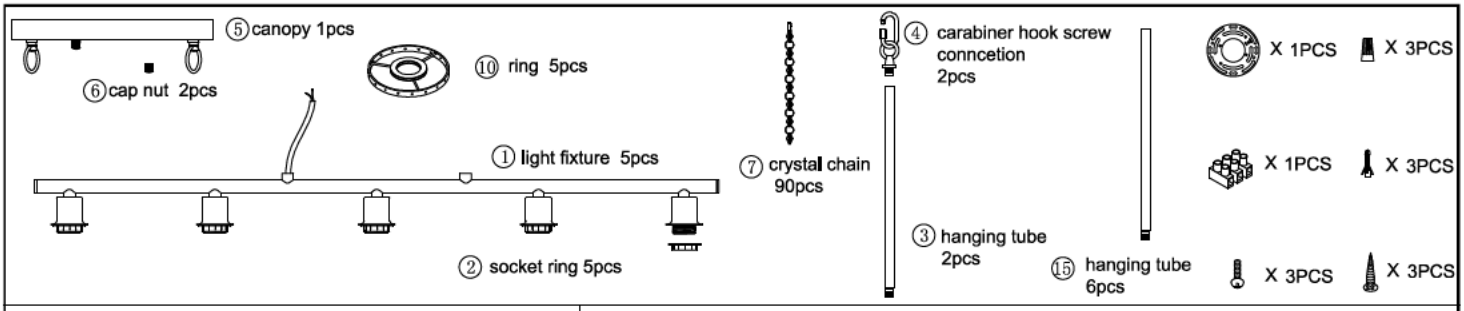

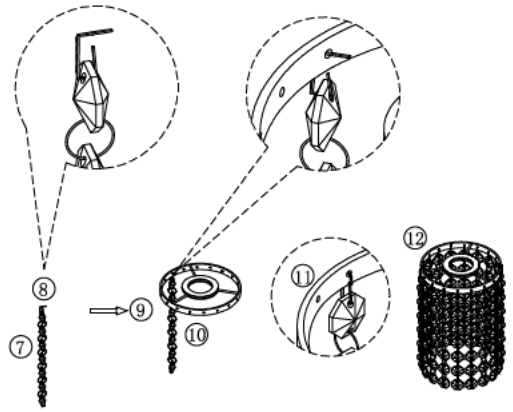

1.Open the pins ⑧ to hang the crystal chain ⑦ to the hole of ring ⑩ (like picture showed ⑨),after that close pins ⑧ to make tighten of the crystal chain ⑦,hang all crystal chains ⑦ to the ring ⑩ to make crystal lampshade ⑫ ready.

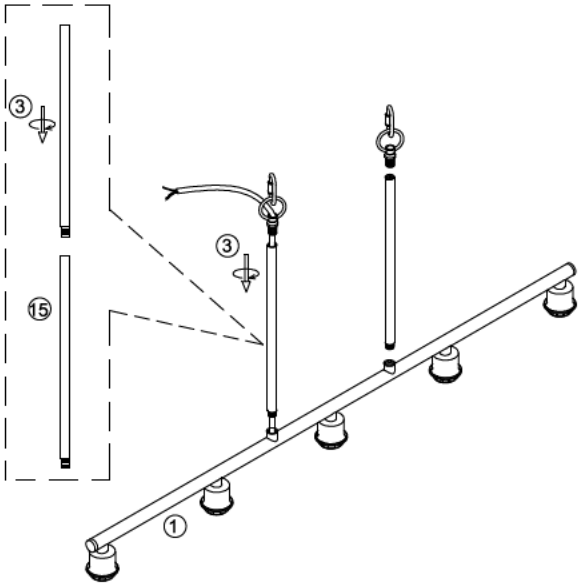

2.Let the wire of the light fixture ① go through the hanging tube ③,rotate to fix the tube ③ to the fixture ① (can connect more tubes to get suitabe height).

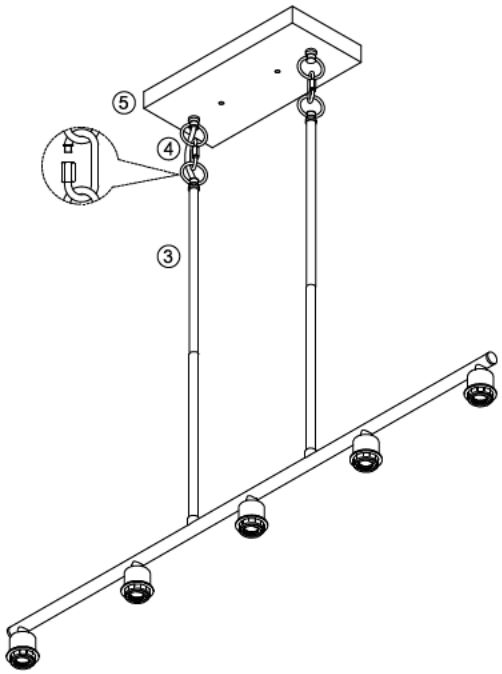

3.Connect the tube ③ to the canopy ⑤ with carabiner hook screw connection ④, let the wire go through the canopy ⑤.

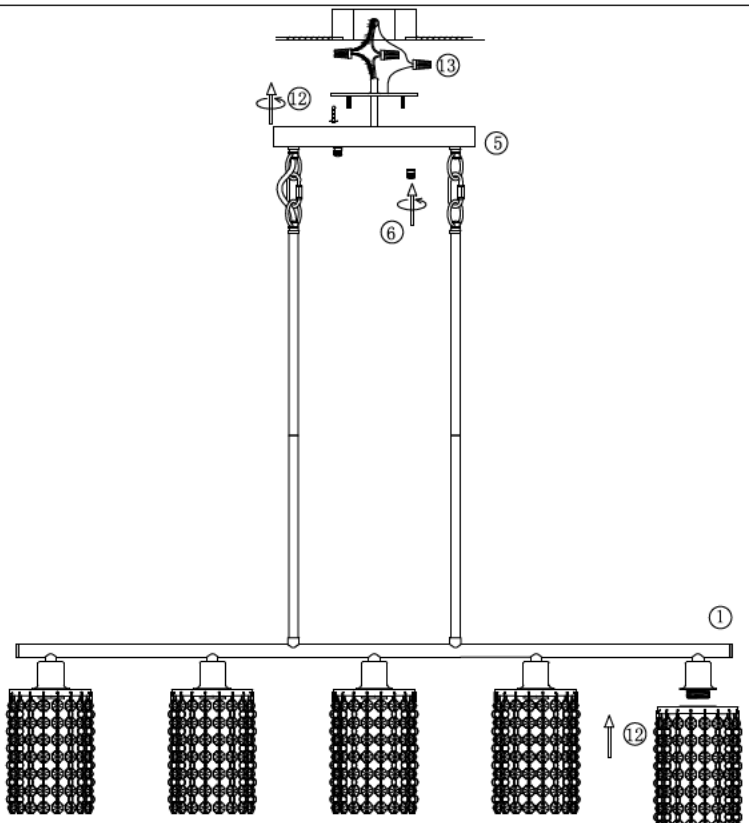

4.Install the bracket to the ceiling junction box with screw ⑫.
5.Connect the wire to your home line with cap connector ⑬.
6.Install the fixture to the bracket with cap nut ⑥.
7.Install the crystal lampshade ⑫ to the fixture with socket ring ②.
8.Install the bulbs ⑭.

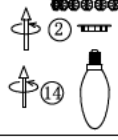

Please read carefully before installation!!!
Note : Please make sure that the electricity is powered off during installation !
Only a professional electrician should install this kind of product !