5-LT CHANDELIER 6-LT CHANDELIER

PACKAGE CONTENTS

PART	DESCRIPTION	QUANTITY	QUANTITY
A	Fixture	1	1
B	Frame	1	1
C	Screw	3	4
D	Round arm	3	4
E	Finial	3	4
F	Seat ring	2	2
G	Stem	1	1

P500330-031

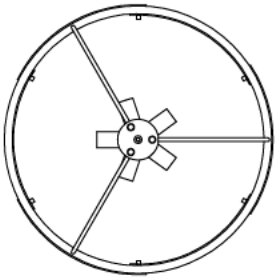

P500331-031

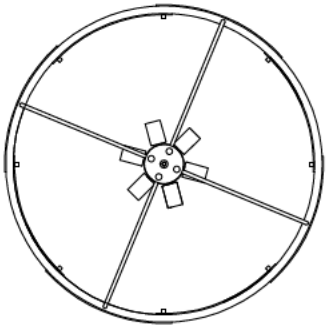

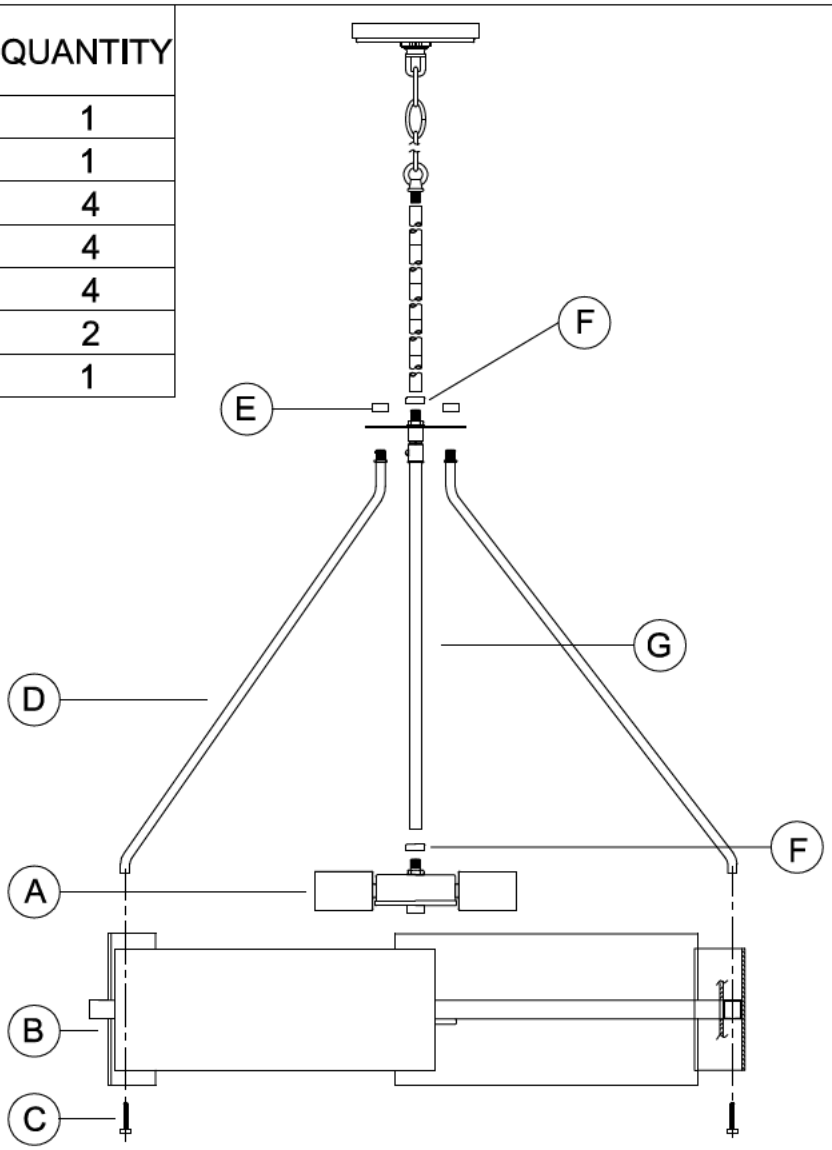

HARDWARE CONTENTS (not actual size)

AA	BB	CC	DD	EE	FF	GG	HH	JJ	KK	LL	MM
	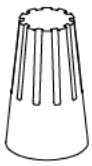										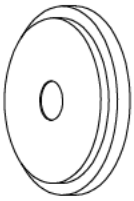
Hex nut	Wire nut	Mounting plate (1/8IP)	Screw collar	Chain holder (1/8IP)	Nipple (1/8IP)	Chain (6 links)	12" Pipe (1/8IP)	6" Pipe (1/8IP)	Nipple (1/8IP)	Chain loop (1/8IP)	Canopy
Qty:2	Qty:3	Qty:1	Qty:1	Qty:1	Qty:1	Qty:1	Qty:4	Qty:1	Qty:4	Qty:1	Qty:1

Safety Information

Please read and understand this entire manual before attempting to assemble, operate or install the product.

CAUTION: Read instructions carefully and turn electricity off at main circuit breaker panel before beginning installation.

CAUTION: Risk of fire. Min. 90°C supply conductors. Consult a qualified electrician to ensure correct branch circuit conductor.

WARNING: If any Special Control Devices are used with this fixture, follow instructions carefully to assure full compliance with N.E.C. requirements. If there are any questions, contact a qualified electrical contractor.

CAUTION: All glass is fragile. Use care when handling glass shades and bulbs.

Preparation

1. Before beginning installation, make sure all parts are included using the contents diagrams from page 1. If any part is missing or damaged, do not attempt to assemble, install or operate the product.
2. Estimated assembly time: 30 minutes.
3. Tools required for assembly (not included): Phillips screwdriver, pliers, wire stripper, safety glasses, electrical tape, ladder.

Care and Maintenance

Shut off main power supply before cleaning product or changing light bulbs. To clean, wipe with damp cloth. Do not use abrasive cleaners or cleaners that contain alcohol.

Assembly Instructions

1

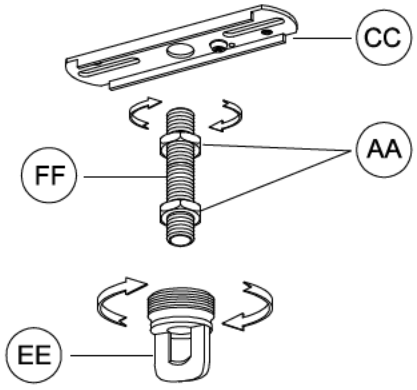

1. Screw threaded nipple (FF) into mounting plate (CC) several turns. Use one hex nut (AA) to secure parts tightly. Screw one hex nut (AA) and chain holder (EE) onto threaded nipple (FF). Tighten the hex nut against the top of the chain holder.

Hardware Used

AA	Hex nut		X2
FF	Nipple		X1
CC	Mounting plate		X1
EE	Chain holder		X1

2

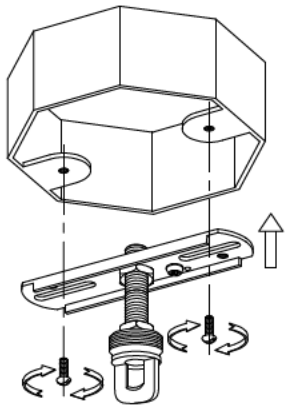

2. Attach assembled parts from Step 1 onto outlet box using the mounting screws supplied with the outlet box (not included).

ASSEMBLY INSTRUCTIONS

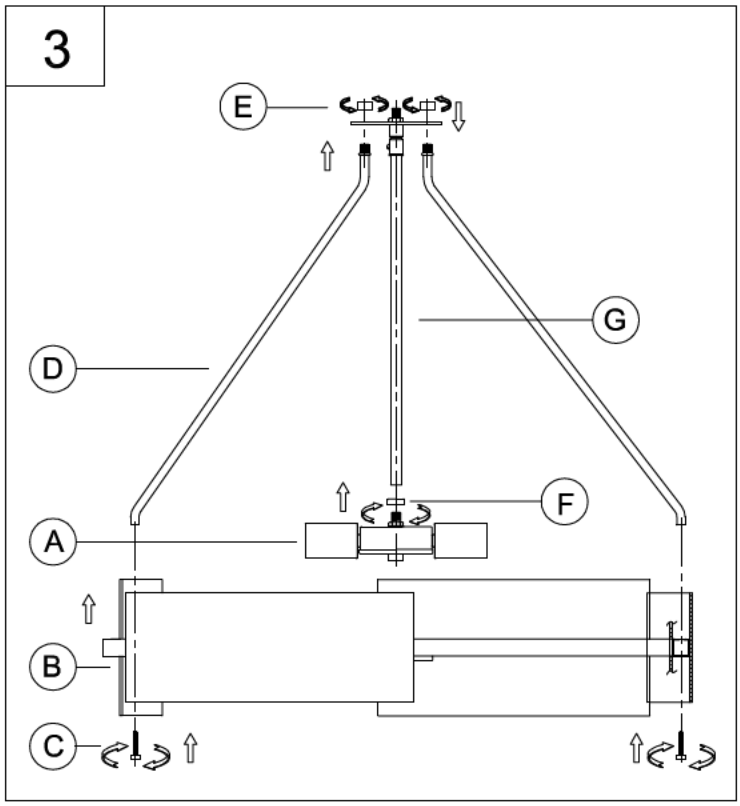

3. Attach round arm (D) to frame (B) use screw (C) to secure tightly; then attach other end of round arm (D) to the steel plate of stem (G) use finial (E) to secure tightly.

Pass the wires through the seat ring (F) / stem (G) , thread fixture (A) onto the seat ring (F) / stem (G) to secure tightly.

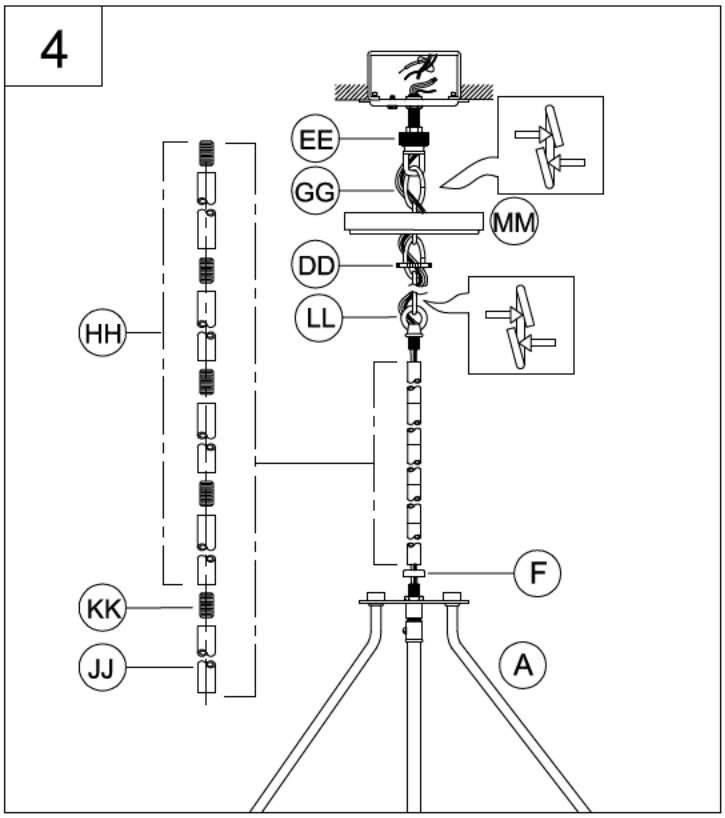

MM Canopy	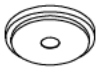	X1
LL Chain loop	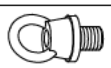	X1

4. Pass the wires through the seat ring (F)/nipple (KK)/ one pipe (JJ)/four pipe (HH) to achieve overall desired length.
Next attach seat ring (F) / pipe onto fixture (A), secure tightly.
Weave wires through chain (GG). Pass wires and chain through screw collar (DD) and canopy (MM). Open two links of chain and attach one end to chain loop (LL) and the other end to chain holder (EE). Close the chain links.
Pass the wires through the chain holder/ threaded nipple/ mounting plate.
NOTE: During this step, you may choose to shorten the chain and electrical/ ground wires.

Hardware Used

DD Screw collar		X1
GG Chain		X1
HH 12' Pipe	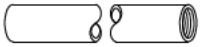	X4
JJ 6' Pipe	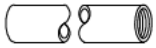	X1
KK Nipple		X4

ASSEMBLY INSTRUCTIONS

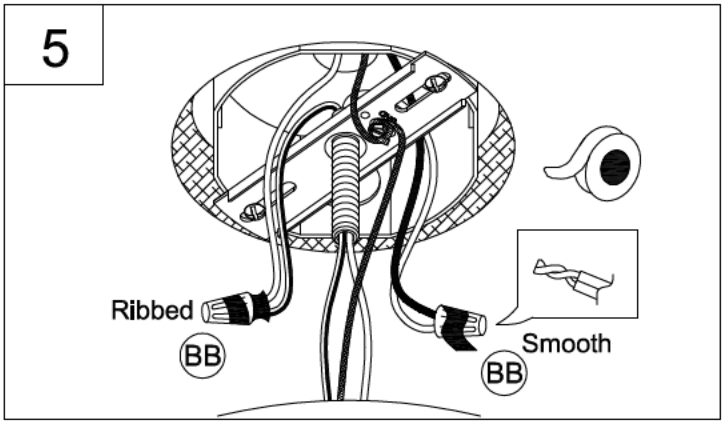

5. Strip 3/8" of insulation from the electrical wire ends. Using wire nuts (BB), connect RIBBED fixture wire to the WHITE supply wire from the outlet box; connect the SMOOTH fixture wire to the BLACK supply wire.
Connect the fixture ground wire and supply ground wire using a wire nut or by fastening to the ground screw on the mounting plate. Push all wire connections into the outlet box.

BB Wire nut X3

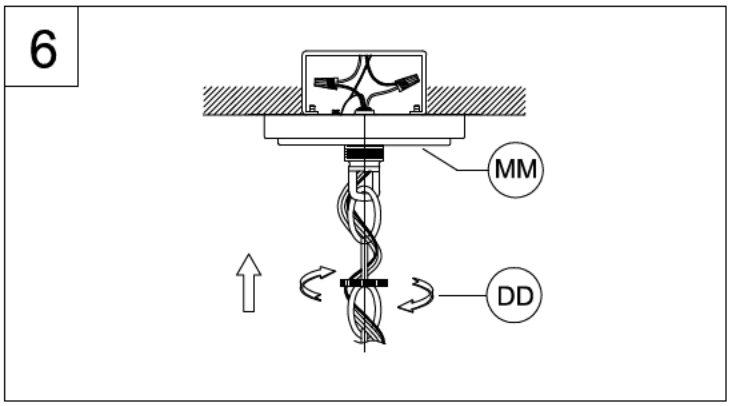

6. Tuck the wires into the outlet box and slip the canopy over the chain holder. Thread the screw collar (DD) onto the chain holder to secure the canopy tightly to the ceiling.

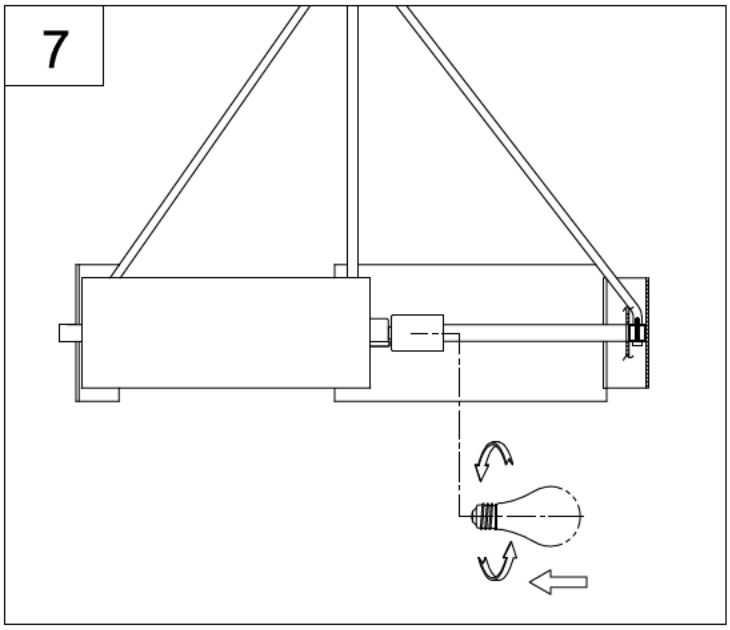

7. Screw lamp (not included) into fixture socket. Use 60-watt MAX incandescent medium base lamp, SBCFL or SBLED.

WARRANTY AND EXCLUSIVE REMEDY: Progress products, when properly installed and under normal conditions of use, are warranted to our customers only to be free from defects in material and workmanship at time of shipment. All warranty claims must be asserted within one year from date of purchase of the subject items; thereafter, warranty claims will not be honored. Customers' sole remedy for a warranty claim or otherwise shall be limited to repair or replacement of the subject product if it is shown to have been defective in material or workmanship at time of shipment. Progress's sole and maximum liability for a defective product shall never exceed the cost of the subject product. **EXCEPT FOR SUCH A WARRANTY AND EXCLUSIVE REMEDY AS STATED (AND THE EXPRESS WARRANTY OF TITLE), WE DISCLAIM ALL OTHER WARRANTIES, WHETHER EXPRESS OR IMPLIED, AND SPECIFICALLY DISCLAIM THE IMPLIED WARRANTIES OF MERCHANTABILITY AND FITNESS FOR A PARTICULAR PURPOSE. IN NO EVENT SHALL WE BE LIABLE TO CUSTOMER IN WARRANTY, CONTRACT, NEGLIGENCE, STRICT LIABILITY OR OTHERWISE, FOR ANY DAMAGES, WHETHER INCIDENTAL OR CONSEQUENTIAL, WHICH ARE ALLEGED TO BE CAUSED BY ONE OR MORE OF OUR PRODUCTS, BEYOND THE COST TO THE CUSTOMER OF THE SUBJECT PRODUCT OR PRODUCTS.** Therefore, the customer's sole and exclusive remedy against us for breach of the warranty, breach of contract or negligence or strict liability or otherwise shall be limited to repair or replacement of the subject product at our option (excluding installation and removal charges which shall not be our liability) or, if we choose, refund of the purchase price. In no case does our warranty and exclusive remedy extend to anybody other than our customers. Our customers are not authorized to extend warranties or remedies on our behalf to anyone. Such unauthorized extensions of warranties or remedies by the customer shall remain customer's responsibility. Customer is responsible for determining the suitability of our products for customer's use or resale, or for incorporating them into objects or for applications which customer designs, assembles, constructs or manufactures.

Instructions d'Assemblage et Installation

Mise en garde: Lire les instructions avec soin et couper le courant au disjoncteur central avant de commencer l'installation.

****

MISE EN GARDE: Lire les instructions avec soin et couper le courant au disjoncteur central avant de commencer l'installation.

MISE EN GARDE: Risque d'incendie. Min 90°C conducteurs d'alimentation. Consulter un électricien qualifié pour assurer le bon conducteur de circuit de dérivation.

AVERTISSEMENT - S'il y a d'autres mécanismes régulateurs qui s'emploient avec ce dispositif, suivre soigneusement les instructions pour satisfaire aux exigences NEC. Si vous avez des questions, consulter un électricien qualifié.

MISE EN GARDE - Le verre est toujours fragile; maniez le(s) composant(s) et/ou l' (les) ampoule(s) avec prudence.

****

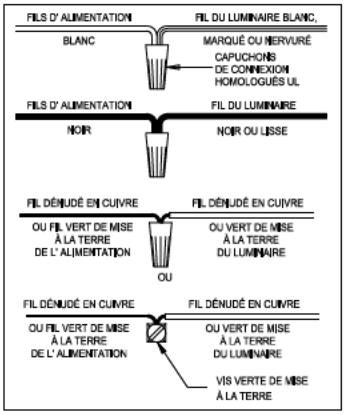

Instrucciones de ensamblaje e instalación

Precaución: Lea cuidadosamente las instrucciones y desconecte la electricidad del cortacircuitos principal antes de iniciar la instalación.

****

PRECAUCIÓN: Lea cuidadosamente las instrucciones y desconecte la electricidad del cortacircuitos principal antes de iniciar la instalación.

PRECAUCIÓN: Riesgo de fuego. Min. 90°C los cables de suministro. Consulte a un electricista calificado para asegurarse de que el conductor del circuito derivado correcto.

ADVERTENCIA - Si usa algún dispositivo especial de control con este aparato de luz, siga las instrucciones culdadosamente para asegurar la completa conformldad con los requlsltos N.E.C. Sl exlste alguna duda, contacte un electricista calificado.

PRECAUCION - El vidrio es frágil; tenga cuidado al manipular el (los) elemento(s) de vidrio y/o la(s) bombilla(s).

****