ITEM NUMBER: CORU07X28X28RIDRCPR

7"W X 28"D X 28"H SERIES 1 THIN RIDGEWOOD ROUGH CEDAR TIMBERTHANE FAUX WOOD CORBEL, PRIMED

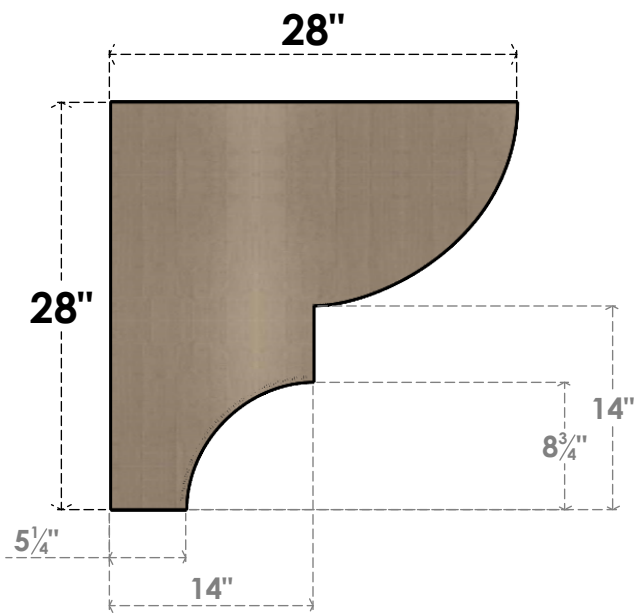

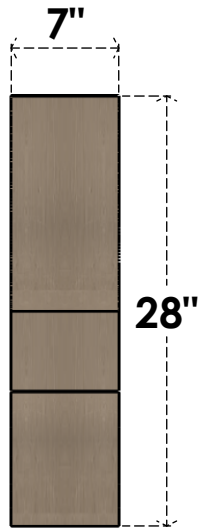

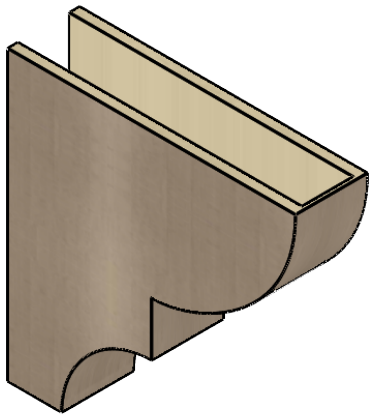

SIDE PROFILE **FRONT PROFILE** **ISOMETRIC**

GENERATED DATE : 01/28/2023

EKENA MILLWORK
2300 WEST MAIN ST.
CLARKSVILLE, TX 75426
TOLL FREE: 866-607-0453
WWW.EKENAMILLWORK.COM

NOTES
1. INSTALLATION TO BE COMPLETED IN ACCORDANCE WITH MANUFACTURER'S SPECIFICATIONS.
2. DRAWING MAY NOT BE TO SCALE
3. THIS DRAWING IS INTENDED FOR DESIGN AND PLANNING PURPOSES ONLY.
4. ALL INFORMATION CONTAINED HEREIN WAS CURRENT AT THE TIME OF DEVELOPMENT BUT MUST BE REVIEWED AND APPROVED BY THE PRODUCT MANUFACTURER TO BE CONSIDERED ACCURATE.
5. TIMBERTHANE ARCHITECTURAL PRODUCTS ARE MADE FROM HIGH DENSITY URETHANE AND COME FACTORY PRIMED