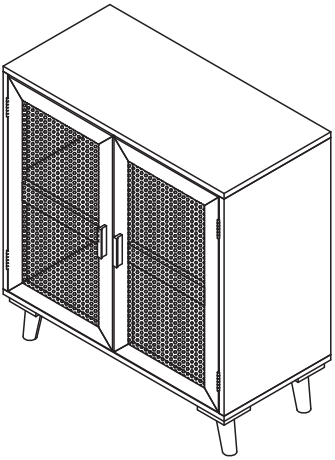

NOTE:

This brochure contains IMPORTANT safty info. Please read and keep for future reference.

MAINTAINANCE
AND WARNING

- Keep furniture away from heat.
- Do not clean furniture with harsh cleansers or polish. Do not use detergents, Solvents, abrasives, spray packs or leather cleaner. Use non-color mild soap with warm water clean spills(Mix 1:10 soap to water)
- Do not place furniture under direct sunlight, material will possibly fade over time.
- Do not use on site dry Cleaning machine.
- Children should not climb or jump on the furniture.
- Do not write on furniture without a padded barrier to protect the surface.
- Not for commercial use, For residential use only.

Weight Limitation

110LBS

PARTS
LIST

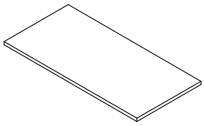

A: X1

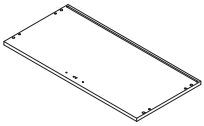

B: X1

C: X1

D: X1

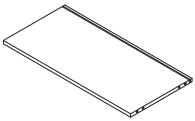

E: X1

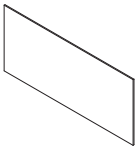

F: X1

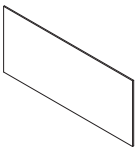

G: X1

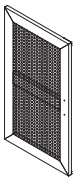

H: X1

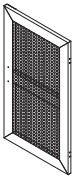

I: X1

J: X4

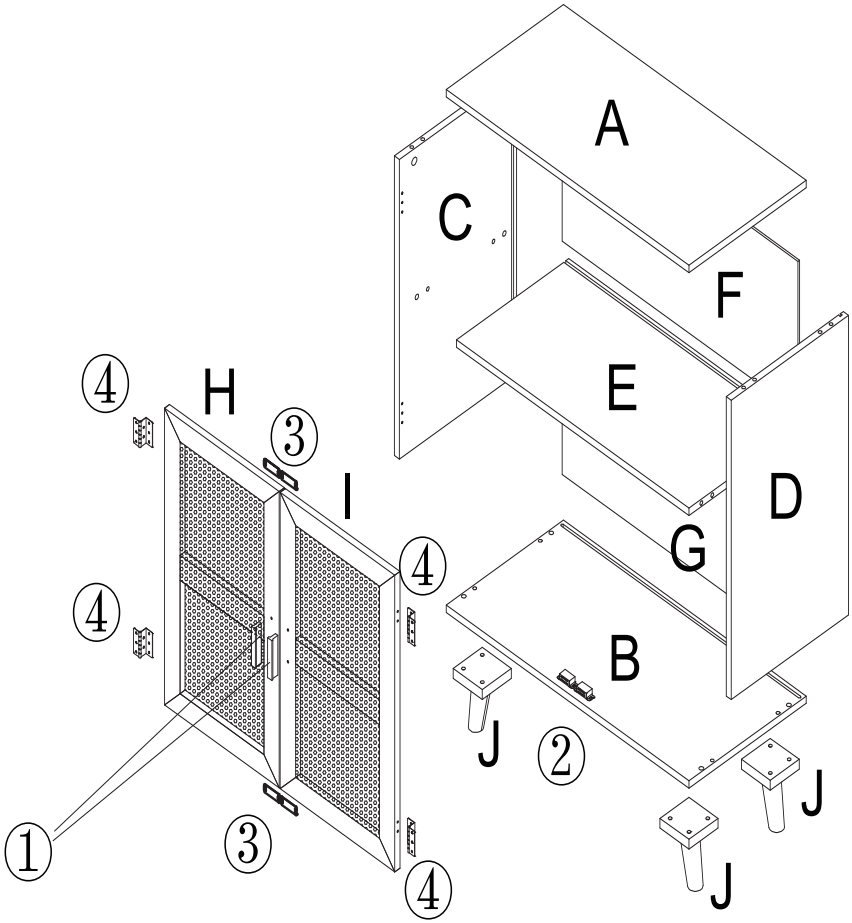

OVERVIEW

HARDWARE
LIST

①: X2

②: X4
M3*14mm

③: X4
M3*14mm

④: X4

⑤: X32
M3*14mm

⑥: X8

⑦: X8

⑧: X8
∅21mm

⑨: X12
∅8*30mm

⑩: X12
M6*25mm

⑪: X1

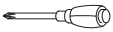

⑫: X1

⑬: X1

⑭: X8
M3*14mm

⑮: X4
M6*50mm

SPARE

⑤: X4
M3*14mm

⑥: X1

⑦: X1

⑧: X1
∅21mm

⑨: X1
∅8*30mm

⑩: X1
M6*25mm

⑭: X1
M3*14mm

⑮: X1
M6*50mm

Be sure to check all packing material carefully for small parts, which may have come loose inside the carton during shipment.

ASSEMBLY
INSTRUCTIONS

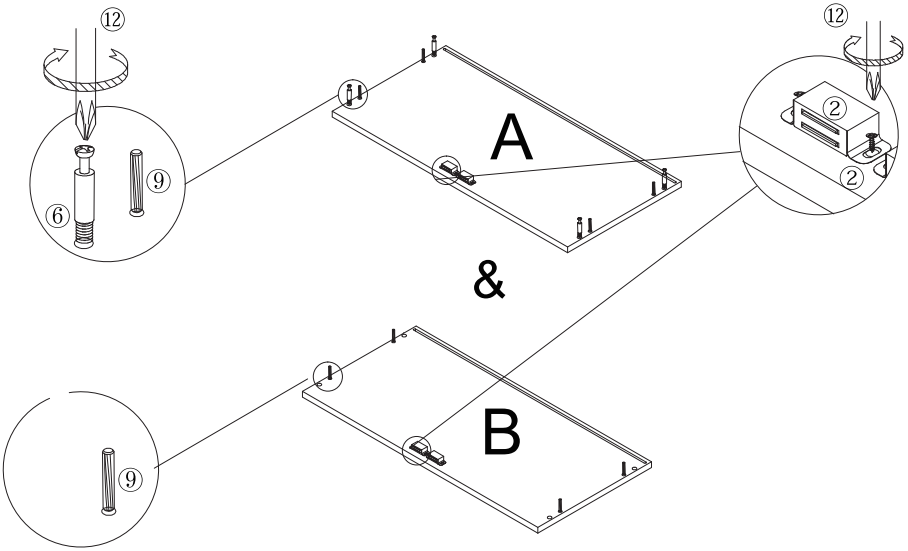

STEP 1: Preparation for panel A and as the picture show.

Insert wooden dowel#⑨ into the predrilled hole on panel A and B.

Screw in cam bolt #⑥ into screw holes on panel A by screwdriver#⑫.

Attach the parts#② to the postion of panel A and B with screw #② by screwdriver#⑫.

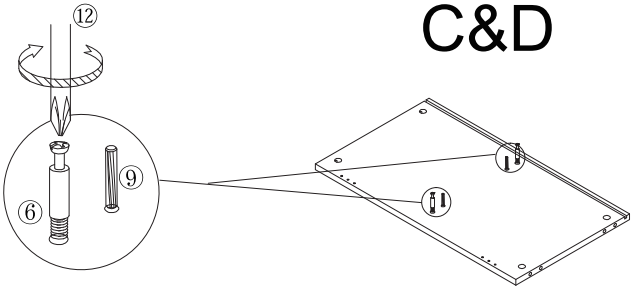

STEP 2: Preparation for panel C and D as the picture show.
Screw in cam bolt #⑥ into screw holes on panel C and D by screwdriver#⑫.
Insert wooden dowels into prodrilled holes on panel C and D by hand.

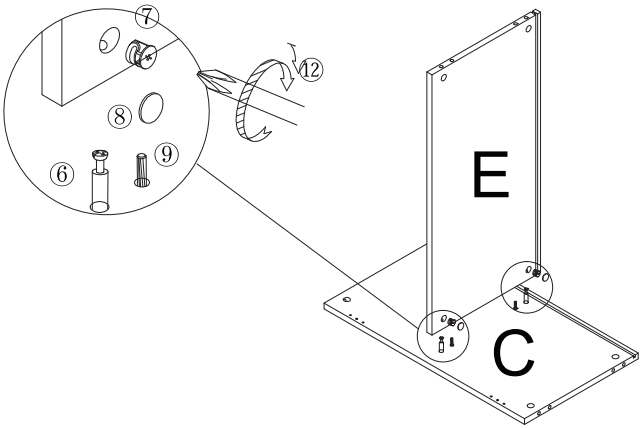

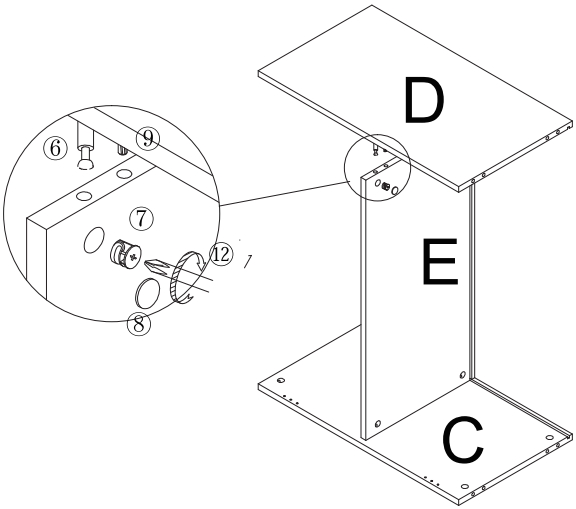

STEP 3: Attach the panel C and D to panel E as the picture show.
Insert cam bolts #⑥ and wooden dowels#⑨ on panel C in to the hole on panel E at the same time, then tighten the screw nut#⑦ by screwdriver#⑫.
Use the same way to finish panel D and E.
Donn't forget to use sticker #⑧ to cover the screw hole for look nice!

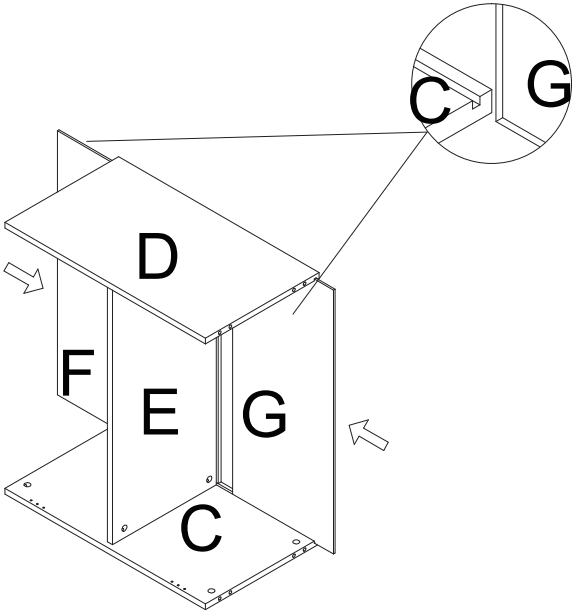

STEP 4: Insert the panel F and G into the grooves on panel C, D and E as the picture show.

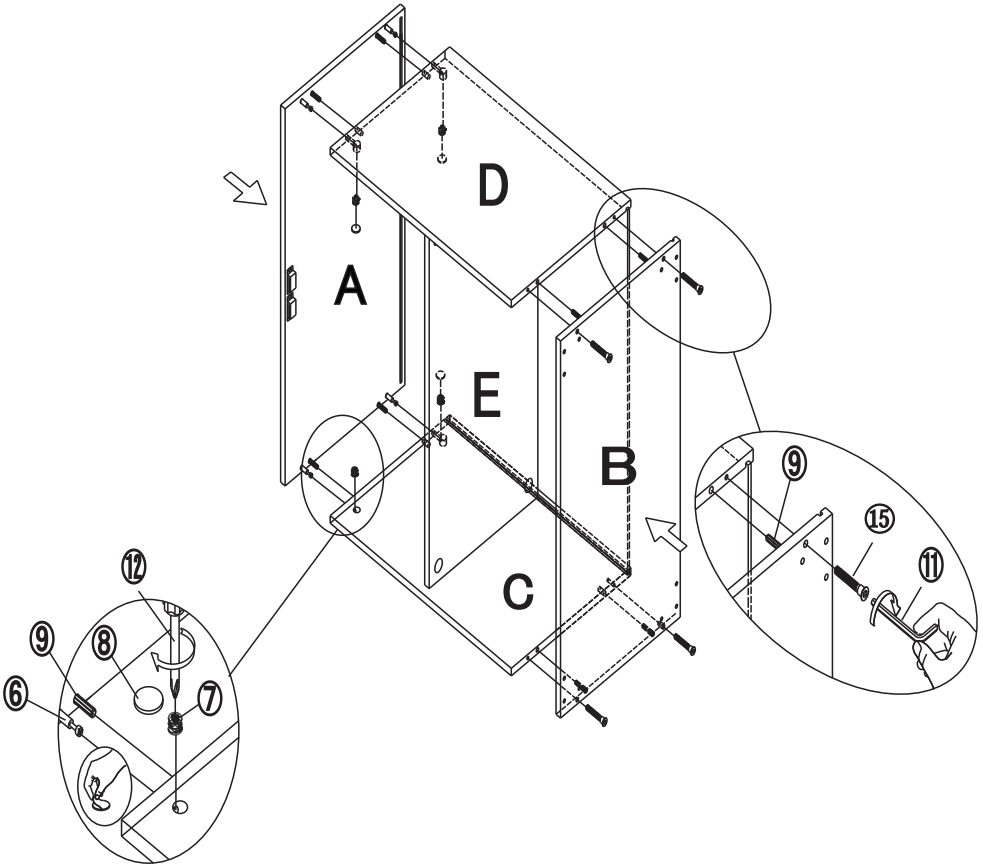

STEP 5: Attach the panel A and B to the preassembled step 4. Insert the preassembled panel A into the holes on panel C and D,then insert cam nuts #⑦ into panel C/ D,use screwdriver #⑫ to fasten it as the picture show.insert the preassembled panel B into panel C and D， then use screws ⑮ and allen key ⑪ to attach it as picture show. Donn't forget to use sticer#⑧ to cover the screw holes for look nice!

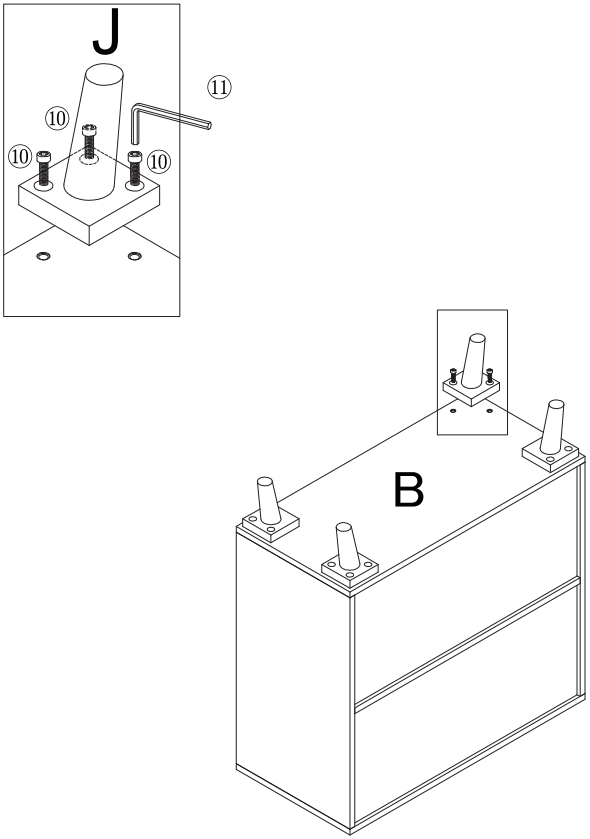

STEP 6: Attach the legs.

Align the holes on the panel B with legs J to and use bolt #⑩ to attach leg J to panel B, then tighten it by screwdriver#⑫ as the picture show.

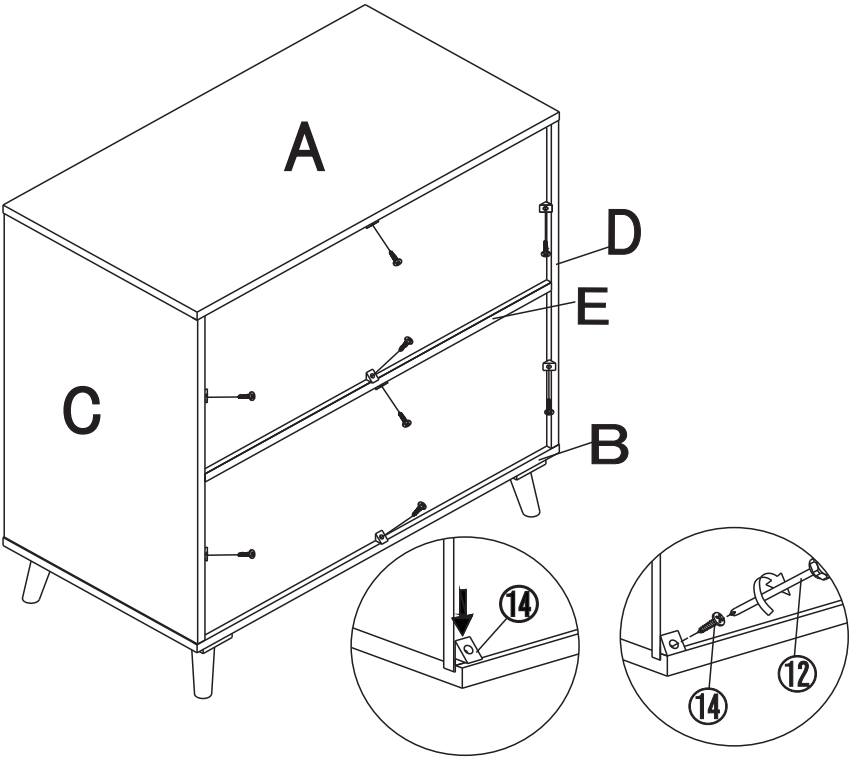

STEP 7: Insert plastic bracket #⑭ into the groove of back panel and panel A/B/C/D/E, use screwdriver #⑫ to fasten screws in order to secure back panel.

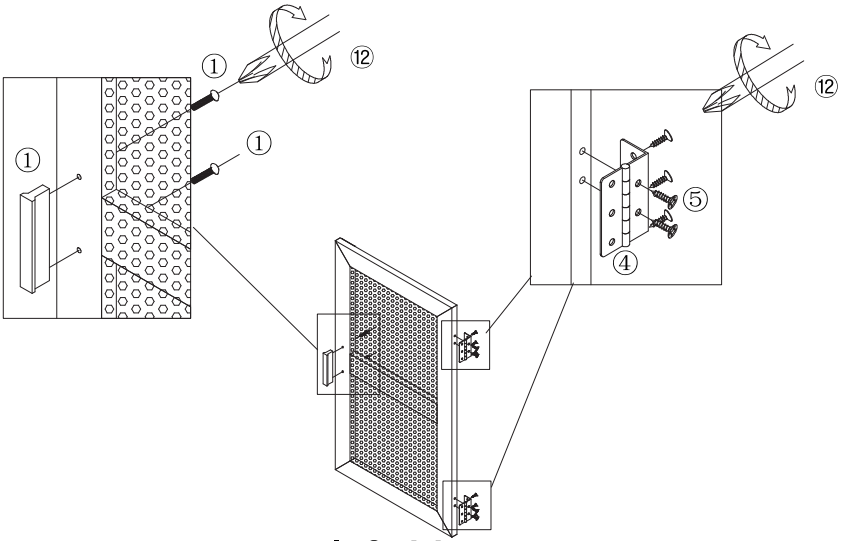

I & H

STEP8: Prepartion for panel I and H.

Align the hole of panel I&H with handle#① and use screw#① to attache handle#① to panel I&H, tighten it with screwdriver #⑫.

use screw#⑤ to attach hardware #④ to panel H&I,tighten it with screwdriver #⑫.

Make sure install the screw on the predrilled position.

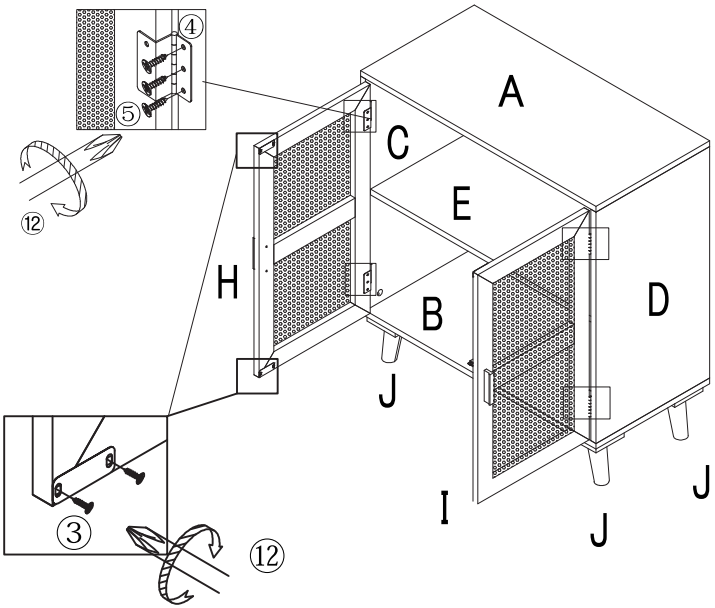

STEP9: Use screw #③ to attach metal plate#③ to panel H&I ,tighten it with screwdriver#⑫, then use screw #⑤ to attach hardware#④ on the panel I&H to panel C&D,tighten it with screwdriver#⑫.
Make sure use the predrilled positionson on the panel.

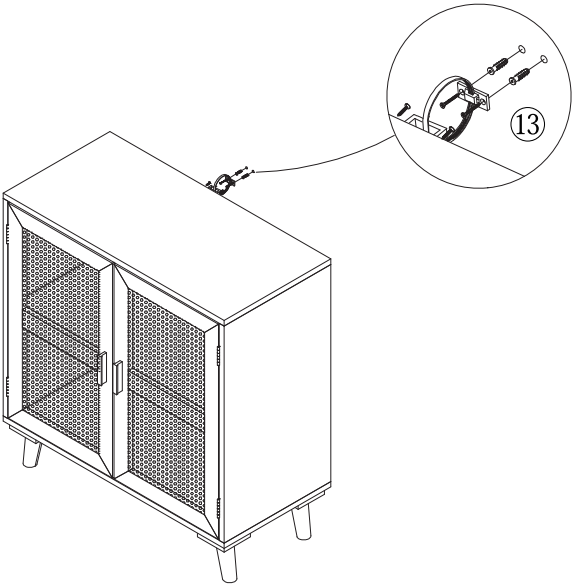

STEP10: Install the anti-collapse set.