# Installation manual for

Dimensions D9″ H12″ L1

Bulb Type E12 bulb no included
Lamp Frame Weigh 3.0 LBS
To al Weigh 6.61 LBS

Thank you for choosing our produc (s).
Our Company is ac i ely in ol ed in e ery s ep of he produc ion.
Our produc (s) are designed o be u ilized for e ery applica ion ha graces your home or business.
We pride oursel es in pro iding he mos promp and cour esy ser ice o all of he alued cus omers.

U C UL US

## SAFETY

Warning  MAKE SURE THE ELECTRICITY TO THE WIRES YOU ARE WORKING ON IS SHUT OFF.BY EITHER REMOVING THE FUSE OR TURNING OFF THE CIRCUIT BREAKER.

## CAUTION

- Before assembling  he ligh ing fix ure, please read all ins ruc ions carefully.
- All frame & crys al componen s are fragile, please handle wi h care.
- Required supply circui  110 - 130V/60Hz
- Labeled wires are “L” for li e wire, “N” for neu ral wire, “E” for ground wire.
- Ne er ins all fix ure on damp ceiling,  he room should be dry and well  en ila ed
- All elec rical componen s mus  be ins alled by a licensed elec rician and in accordance wi h  he Na ional Elec rical Code and  he appropria e local elec rical codes.

## Unpack  he Package

Please open  he box carefully and check all  he i ems are inside  he box. If you ha e any ins alla ion, assembling and missing par s ques ions.
where you purchase from and any o her rele an  informa ion ready, our cus omer ser ice  eam will pro ide comprehensi e and worry free ser ice  o our  alued cus omers.





## Frame Assembly Diagram

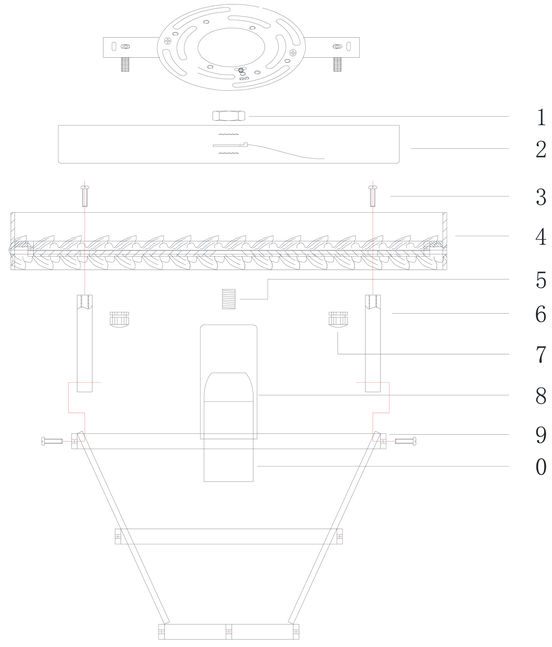

D9″ H12″ L1

## Step 1

Please use he par slis o ensure you are no missing any par s.

PARTS LIST

| Par | Pic ure | Descrip ion | Par s number | Q y | Check lis |
|---|---|---|---|---|---|
| ZA | | Junction box not included | | 1 | |
| ZB | | Crossbar 4″ | | 1 | |
| ZC | | Crossbar Screws | | 2 | |
| D( 0 ) | | Accessory ( D7″*H0 8″ ) | | 1 | |
| ZE(P07) | | Crossbar Bracket | | 2 | |
| ZF | | ground wire | | 1 | |
| ZG | | junction caps | | 2 | |
| P01 | | Nut | | 1 | |
| P02 | | Accessory | | 1 | |
| P03 | | Sunk Crossbar Screws | | 6 | |
| P0 | | rosette | | 1 | |



D9″ H12″ L1

| art | icture | Description | arts number | Qty | Check lis |
|---|---|---|---|---|---|
| P05 | | Thread pipe | | 1 | |
| P06 | | Square tube | | 3 | |
| P07 | | Nut cap | | 2 | |
| P08 | | Socket Cup | | 1 | |
| P09 | | Upper lamp frame | | 1 | |
| P10 | | socket | | 3 | |
| A | | 710-2″ | RC710-2-C -C | 11 | |
| B | | 710-2 5″ | RC710-2 5-C -C | 35 | |
| C | | 711-3 5″ | RC711-3 5-C -C | 2 | |
| D | | 711-4″ | RC711-4-C -C | 1 | |
| | | | | | |
| | | | | | |

D9″ H12″ L1

| art | icture | Description | arts number | Qty | Check lis |
|---|---|---|---|---|---|
| | | | | | |
| | | | | | |
| | | | | | |
| | | | | | |
| | | | | | |
| | | | | | |
| | | | | | |
| | | | | | |
| | | | | | |
| | | | | | |
| | | | | | |
| | | | | | |



D9″ H12″ L1

S ep 2

# Canopy Installation Instruction

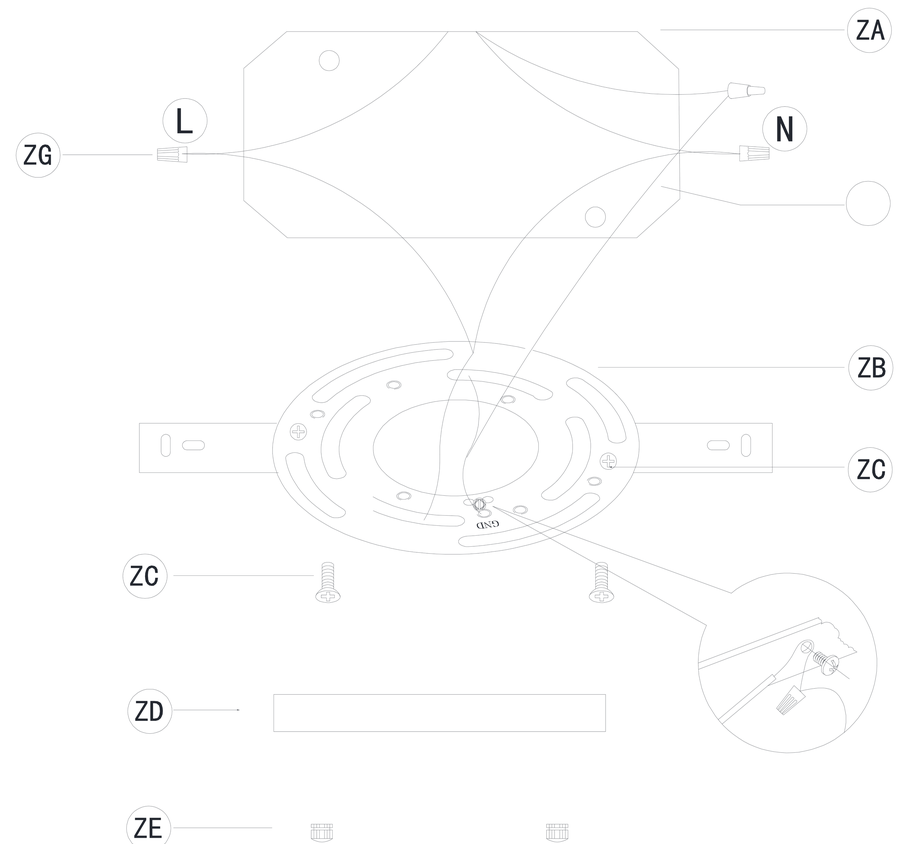

IMPORTANT: Tes socke s wi h bulb before dressing he fix ure.

1. A ach he Crossbar ZB) o he Junc ion Box ZA)using he wo crossbar screws(ZC)which are no supplied and should already be in your box.
2. Be sure when connec ing he wire use elec rician appro ed unc ion caps ZG).
3. S ow he excess wire in he unc ion box ZA).
. Moun ing screws(ZE),a ach he fix ure o he ceiling.





Step 3

# Frame Assembly Diagram

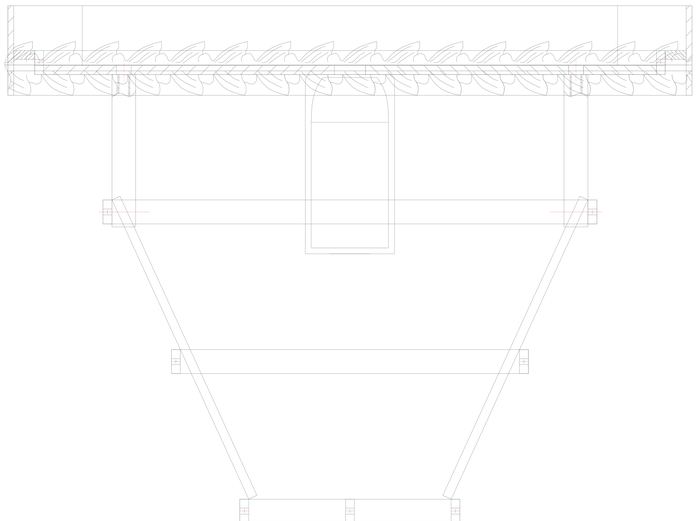

01

# Frame Assembly Instructions

## Installation:

Please read all ins ruc ions carefully. Before you proceed o ins all,make sure ha he power supply is urned off and remains off un il ins alla ion is comple e.Please no e ha each par has been assigned a number. Please proceed in a numerical order.

1. Fixed he Ceiling Co eron he Mon ing Bracke 01), hen pu he screws igh ened.
2. Screw he Bulb on he Lamp Holder.





Step 4

# Crystal Dressing Diagram

hen dre sing the cha del er
ith the cry tals pl ase reme ber
to ear ith r r bber or cot on
glov s So as to rev nt ny ama e
or s udg ng n t e c yst ls

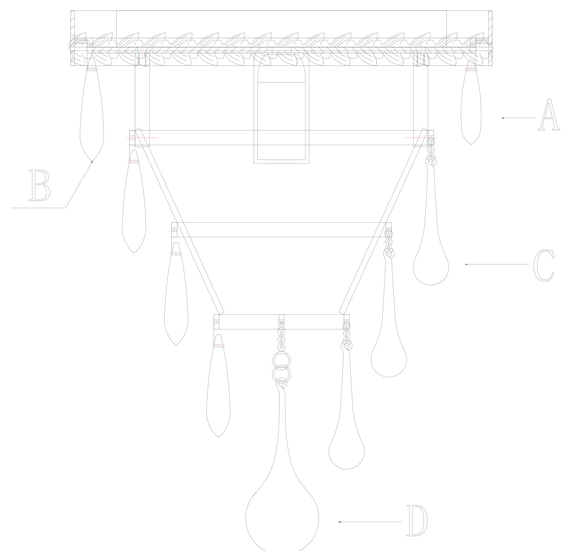


1. Hang he crys al (A) and he crys al B) on he firs circle and he second circle of he Lamp Frame as shown in he figure.
2. Hang he crys al B) and he crys al C) on he hird circle and he six h circle of he Lamp Frame as shown in he figure.
3. Hang he crys al D) a he bo om of he Lamp Frame as shown in he figure.

## Congratulations !

You are now done installing your Lighting fixture. Sit back and admire each crystal as it will become the statement piece for your room/house.

Thank you.





## Cleaning and Maintenance of Chandelier Frame

The finish on our chandelier frames and fix ure frames is pro ec ed by a durable coa ing of lacquer. To clean, use a clean sof , dry clo h.Do no use any me al polishes, cleaners, abrasi es or any subs ance which could remo e he pro ec i e finish. Failure o follow hese ins ruc ions au oma ically oids he guaran ee.

## Cleaning and Maintenance of Crystals

We a sof co on fabric in clean warm wa er and wipe gen ly, hen polish wi h a dry sof co on fabric.

## To Order Crystal Replacement Parts

Should you require replacemen crys als or pins ( he me al connec ors a aching he crys als), con ac he s ore where he produc was purchased or con ac us . For ease of ordering, you may use he original crys al rimming ins ruc ions pro ided wi h his produc and circle he i ems you wish o order, indica ing he quan i y by wri ing he number needed ad acen o he circle . You will be con ac ed wi h prices prior oshipmen . All orders mus be pre-paid.

## Lighting Warranty

The finish and frame of your new chandelier or fix ure are warran ed for a period of one (1) year from he da e of purchase. Our company will, a i s op ion, repair or replace any frame ha has a defec in he ma erials or workmanship during he warran y period. All crys als are guaran eed for heir original quali y during he life of he chandelier. Breakage is no co ered by his warran y.

To make a claim under his warran y, con ac our cus omer ser ice depar men .
A wri en re urn au horiza ion form will be sen o you wi h specific ins ruc ions.



D9″ H12″ L1

## Returns and Conditions of Warranty

Re urns mus be pre-au horized by con ac ing our cus omer ser ice depar men .Re urns will only be accep ed wi h a wri en re urn merchandise au horiza ion and re urn shipping charges pre-paid. We reseser e he righ o inspec all re urned merchandise o fully de ermine he na ure of any defec . This guaran ee shall no apply o any produc ha has been changed, al ered or o herwise modified, nor shall i apply o any produc ha has been repaired or al ered by anyone o her han a pre-au horized facili y. We will no be responsible for any breakage or damages incurred during ransi , nor for crys al par s or me al frame par ha ha e been sub ec o misuse, negligence, acciden or inappropria e handling. Also, we will no be held responsible for damage incurred during improper ins alla ion or wiring by o hers, nor for damages resul ing from a failure o follow he recommended main enance or ins alla ion procedures. This guaran ee is issued in lieu of any and all o her guaran eed or warran ee, whe her wri en or implied and any and all o her obliga ions or liabili ies. Fur her, we nei her au horize nor permi any o her person or firm o assume for us, any liabili y in connec ion wi h he sale of our produc s.