Aspect Furniture

ASSEMBLY INSTRUCTIONS

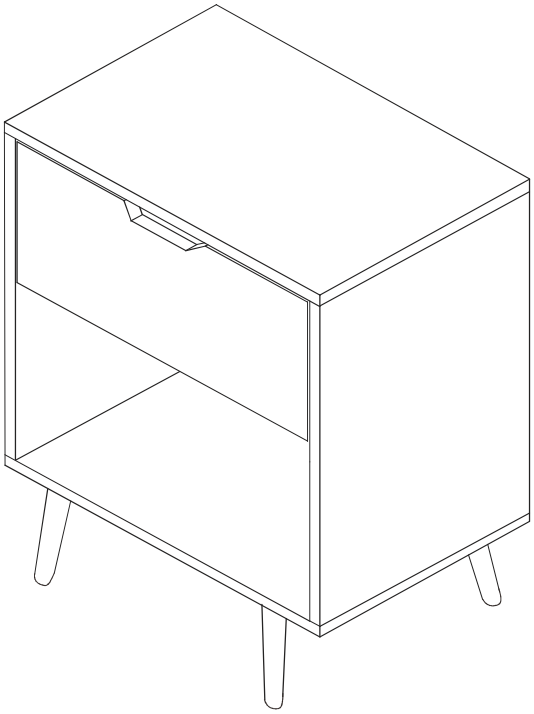

(A)x 6 	**(B)x 6** 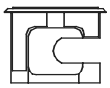	**(C)x 10** 	**(D)x 8** 
(E)x 8 	**(F)x 1** 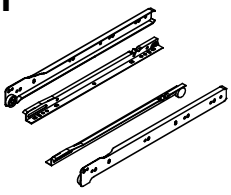	**(G)x 4** 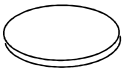	

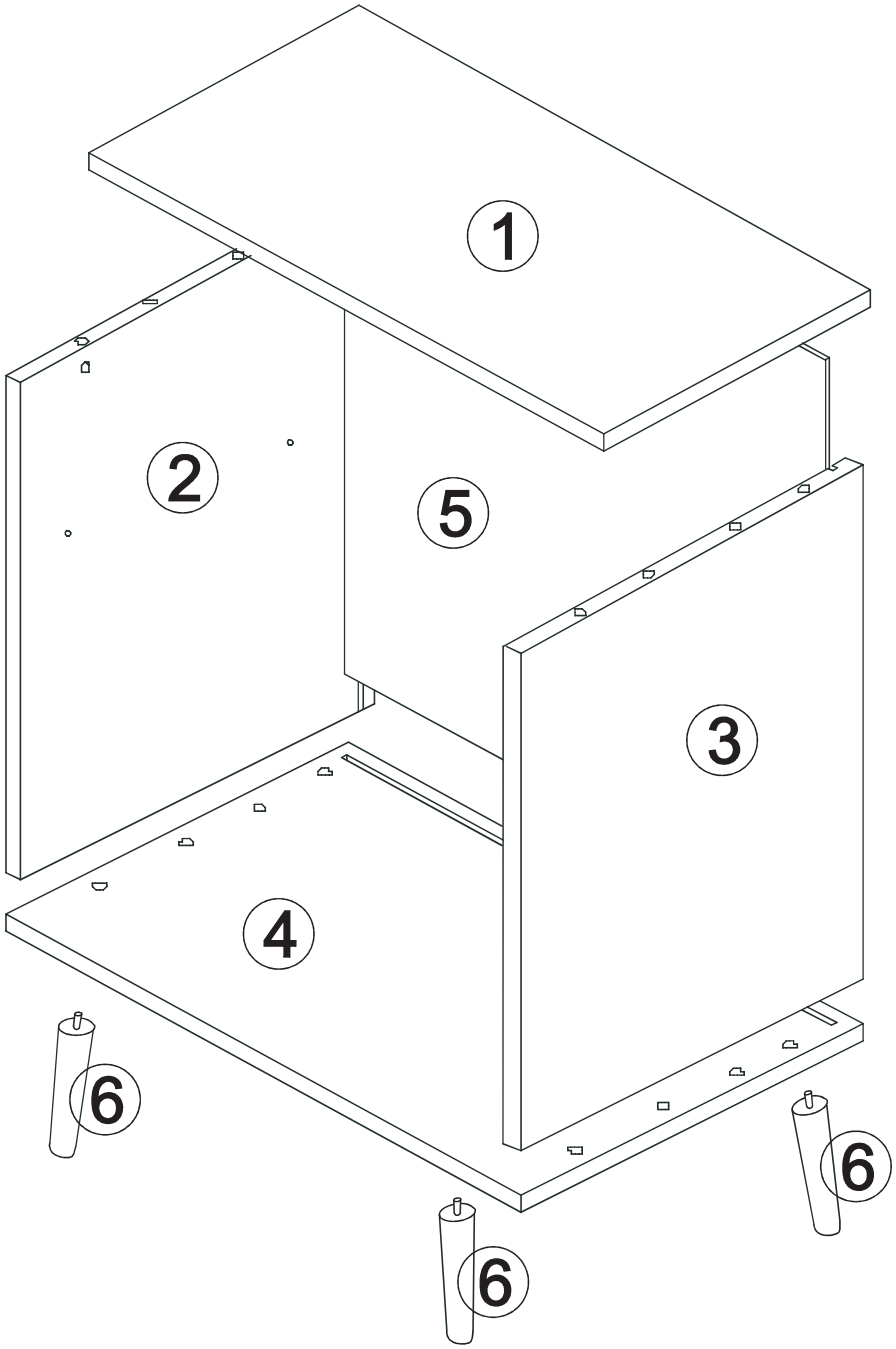
1
2
5
3
4
6
6
6

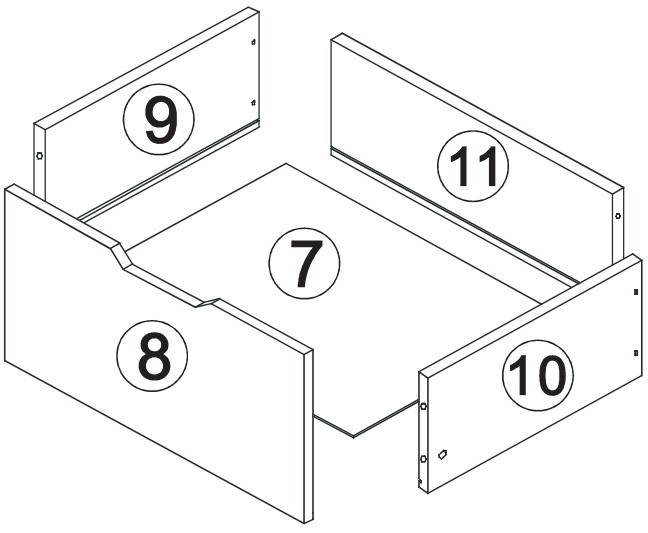
9
11
7
8
10

Step 1

D	4pcs	F	1pcs

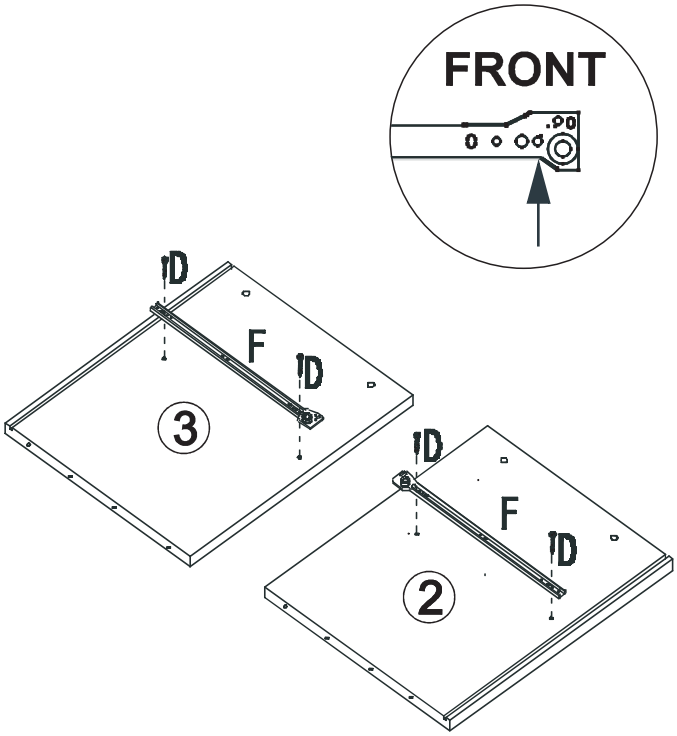

Step 2

C	4pcs
E	4pcs

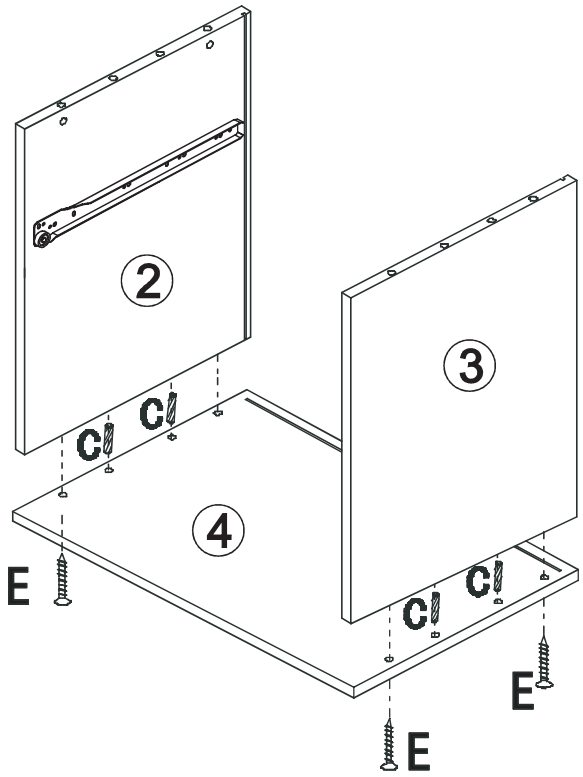

Step 3

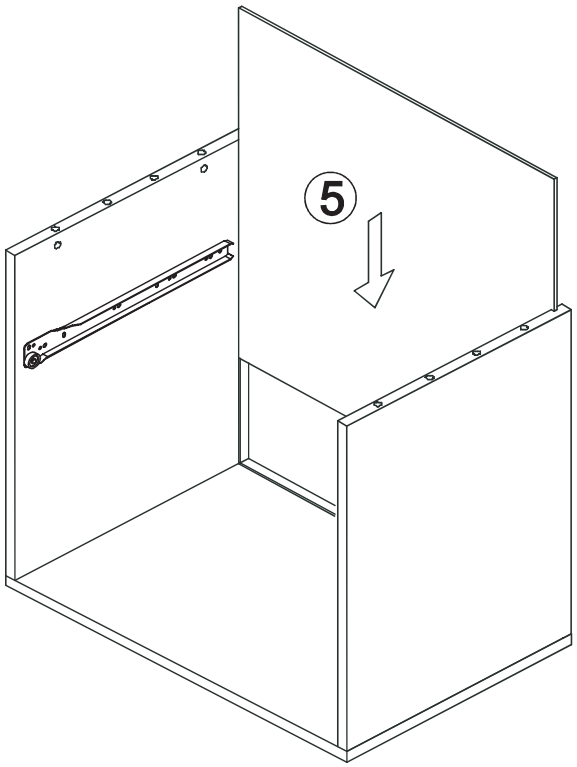

Step 4

A	4pcs	C	4pcs
B	4pcs	G	4pcs

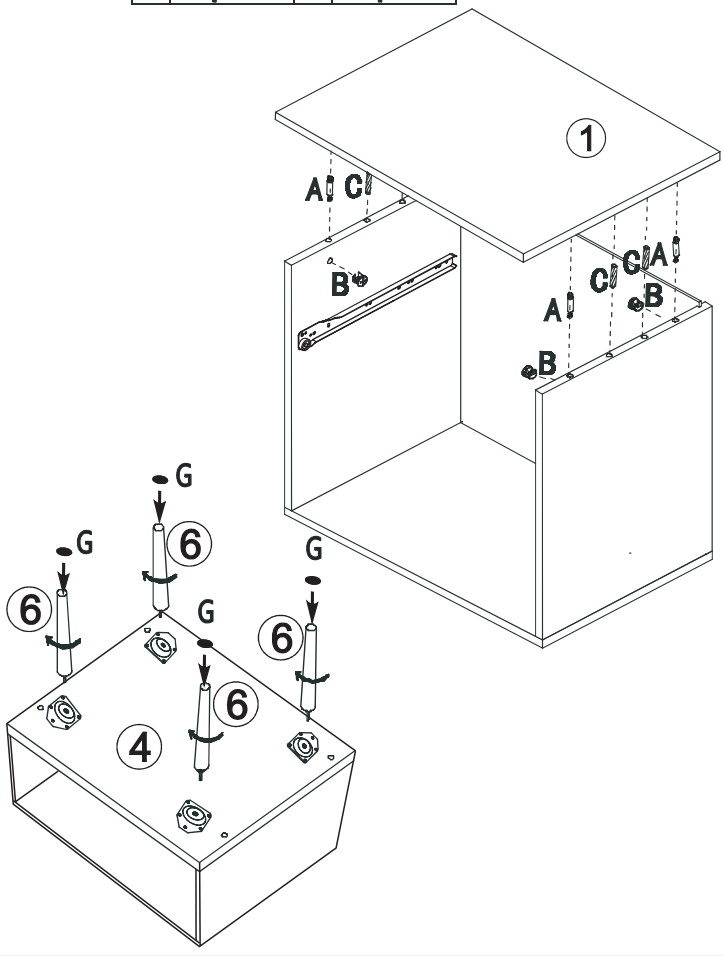

Step 5

E	4pcs

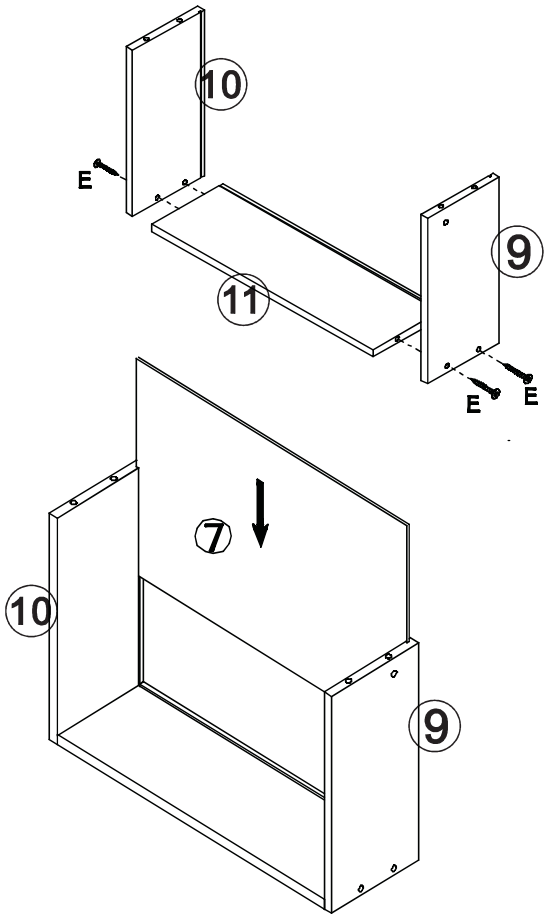

Step 6

A	2pcs	C	2pcs	F	1pcs
B	2pcs	D	4pcs		

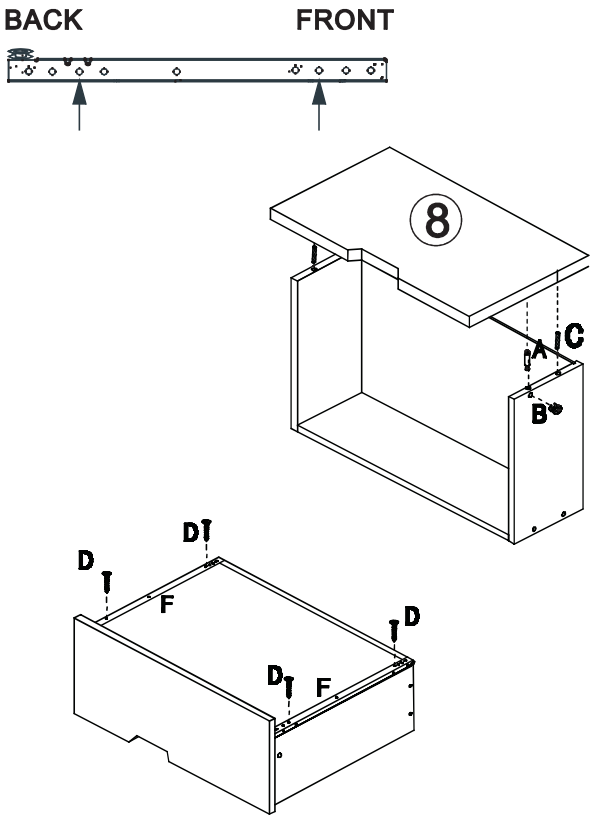

Step 7

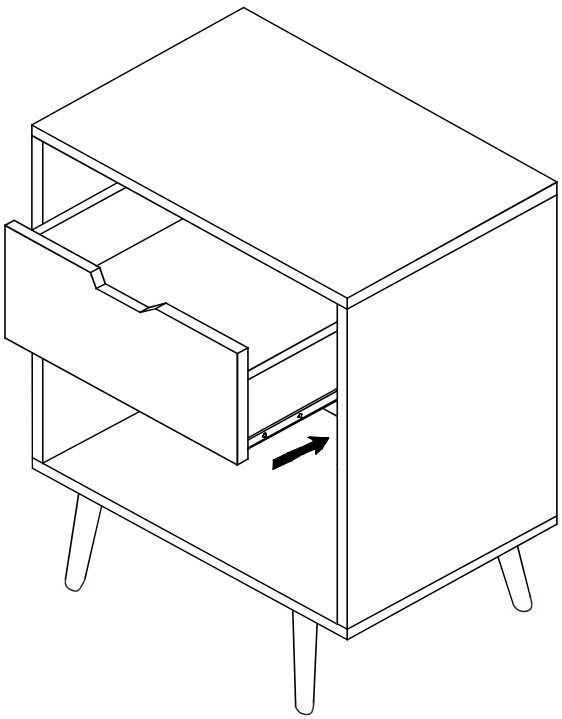

Step 8

