Install Backsplash

STEP 1

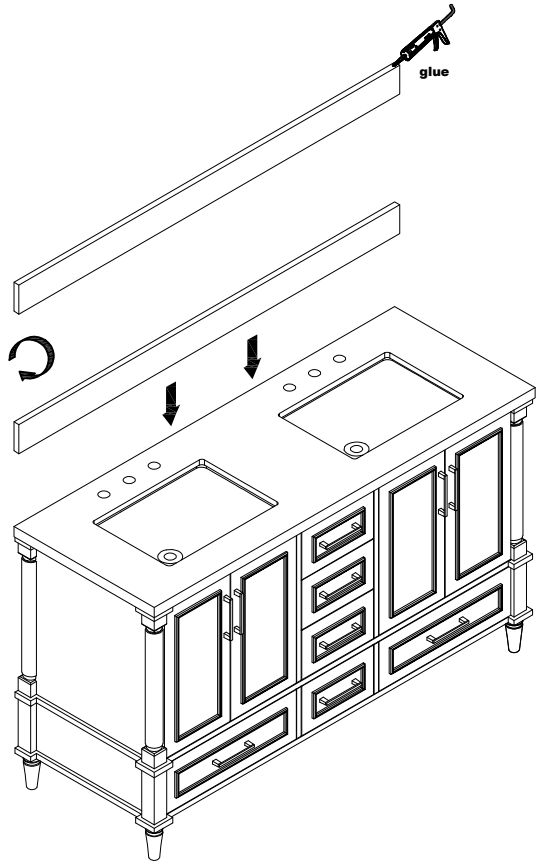

STEP 2

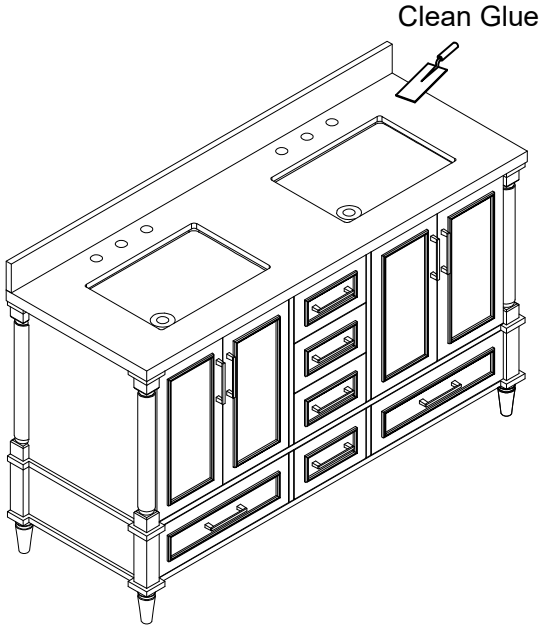
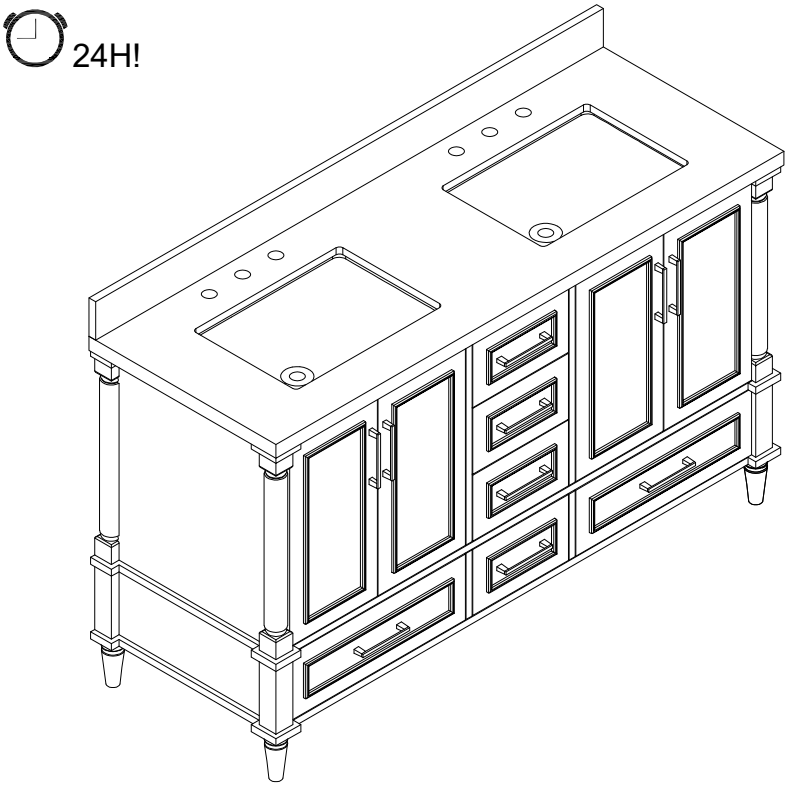
STEP 3