KD STEEL STACKING CHAIR

If you have any questions about the **KD Steel Stacking Chair**, please feel free to contact us.

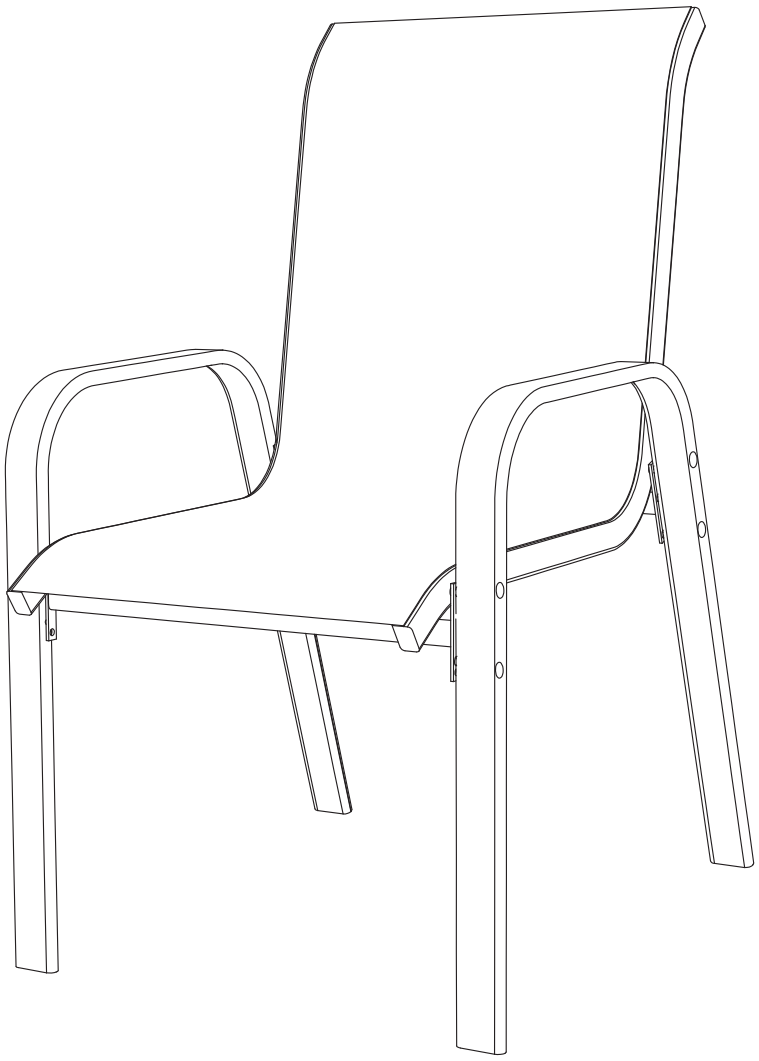

IMPORTANT

PLEASE READ BEFORE YOU COMMENCE ASSEMBLY

Follow the guidelines in this user guide to ensure correct assembly and care for this product.

SPECIFICATIONS

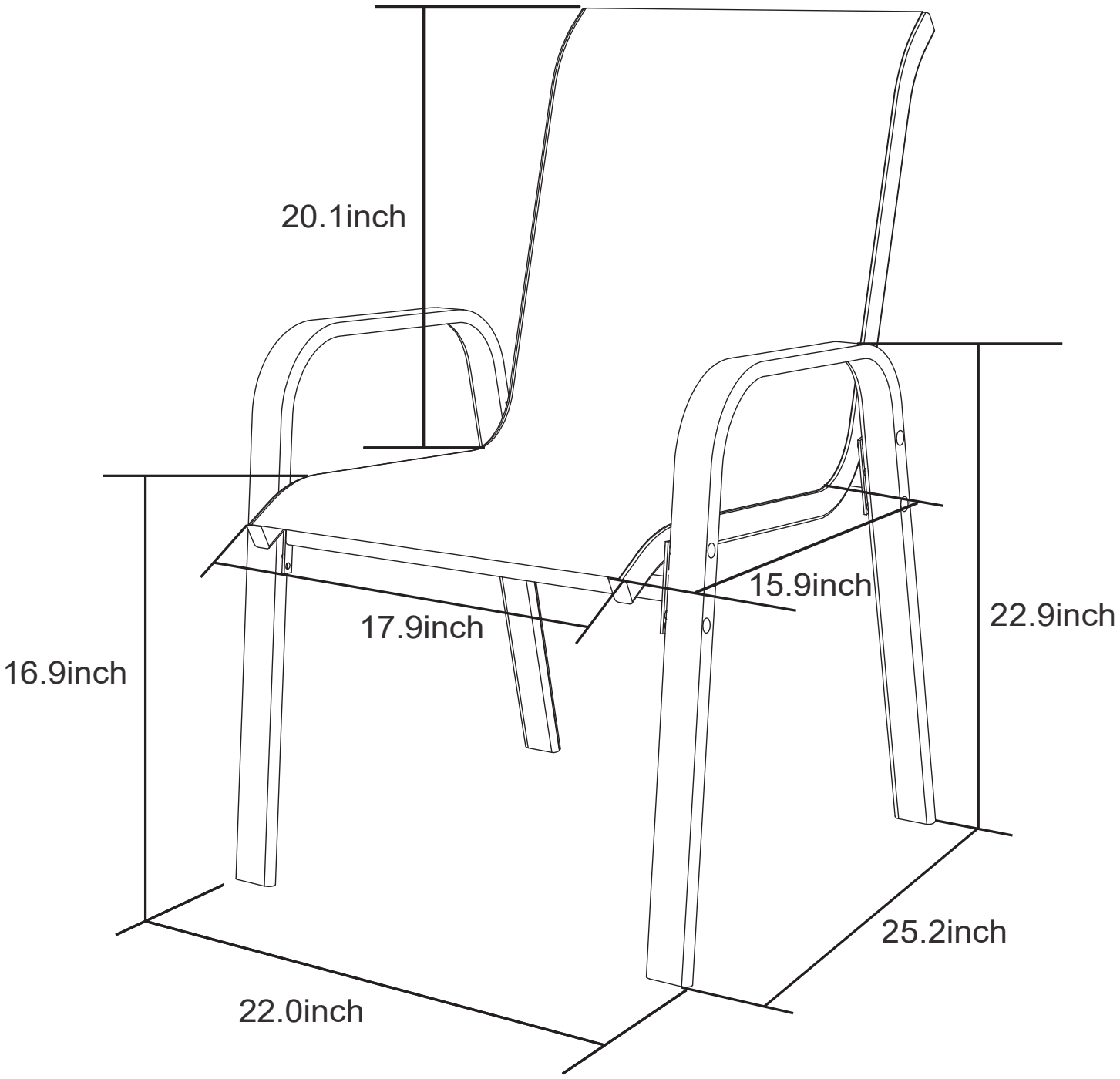

Catalog

Specifications..... 01
Catalog..... 02
Care & Instructions 03
Part List And Screw Set List..... 04
How to Use The KD Steel Stacking Chair 05

Before You Begin

Instructions are supplied in this manual and contain all appropriate information for your product.
Review all instructions before you begin and during assembly, follow the step sequence carefully for correct results.

1.Please separate and identify all the parts, making sure you have all of the parts listed.
2.To avoid any scratch during assembly,please assemble on a soft mat or similar.
3.Please assemble step by step and follow the instruction.
4.Washers must be used.
5.Do not completely fasten each screw and nut until all the screws are properly fixed.
6.If you have a electric screw driver,you can use the electric screw driver instead of the allen key we provided,the electric screw driver helps you to shorten the assembly time.

If you have any questions about the **KD Steel Stacking Chair**, please feel free to contact us.

PART LIST

Parts List			
L001 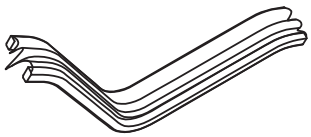 Seat fabric	L002 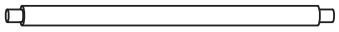 Backrest support round bar	L003 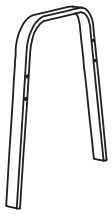 Chair legs	L004 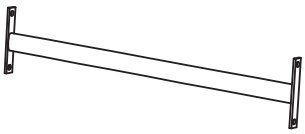 Support Bar
4PCS	4PCS	8PCS	8PCS
Screw Set List			
E	F	G	J
16PCS	16PCS	32PCS	32PCS
M	N	K 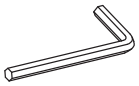	L 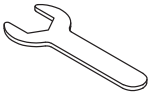
16PCS	16PCS	1PC	1PC
Extra (Screw Set)			
E	F	G	J
2PCS	2PCS	4PCS	4PCS
M	N		
2PCS	2PCS		

How To Assemble the KD Steel Stacking Chair

Step 1: Pull and flatten the seat fabric(L001).
NOTE: Makesure the seat fabric edge is close to the plastic part as much as possible.

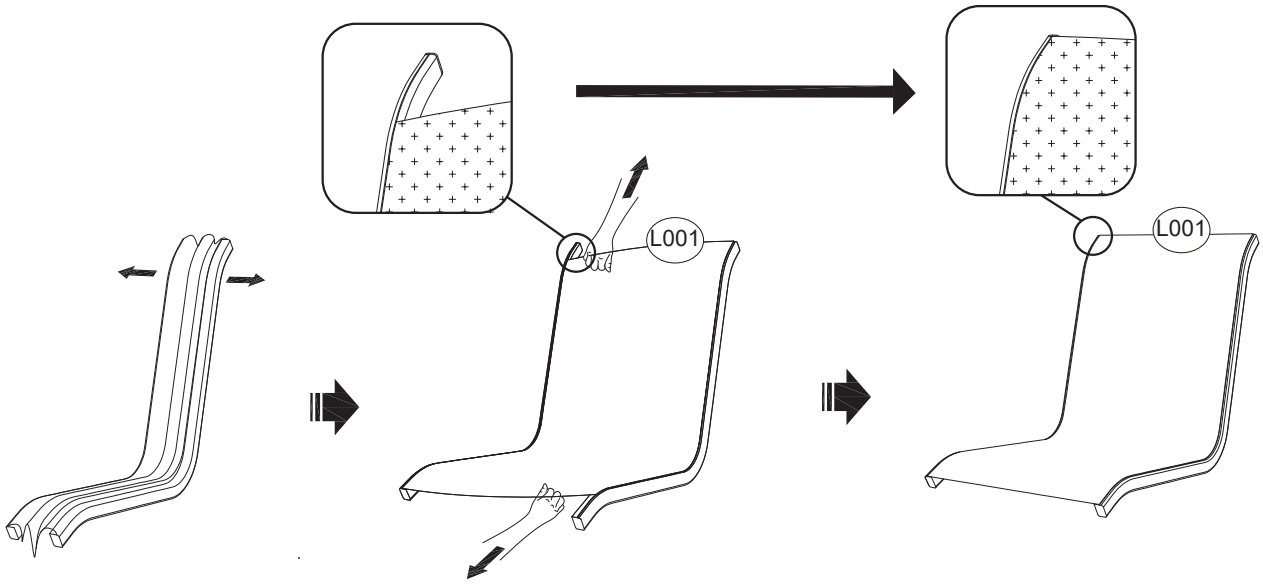

L001 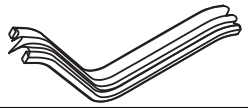 x1

Step 2: Insert the back support rod (L002) into the hole on the right side bar of the seat fabric tube(L001).Hold the back support rod (L002) with one hand and grasp one side bar of the seat fabric tube (L001) with the other hand. Turn the seat fabric tube outward slightly to have enough space to insert the back support rod (L002) into hole.Hold the both sides of the seat fabric tube(L001),turn them slightly inward to makesure the back support rod (L002) was properly installed.
NOTE: Be careful not to pinch your fingers.

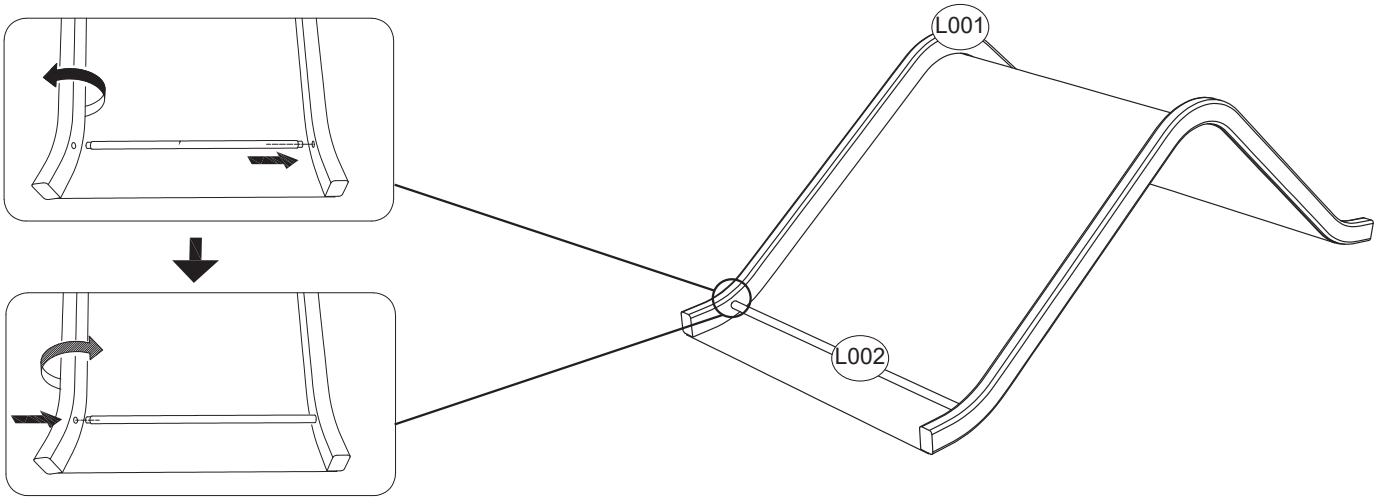

L002 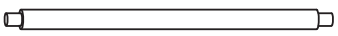 x1

Step 3: Secure the two support rods to the two chair legs with screws as shown in the figure.
NOTE: Each chair only needs to be installed first with the 4 holes where the support bar is closer to the floor.Tighten the screws to 50% tightness.Be careful not to pinch your fingers.

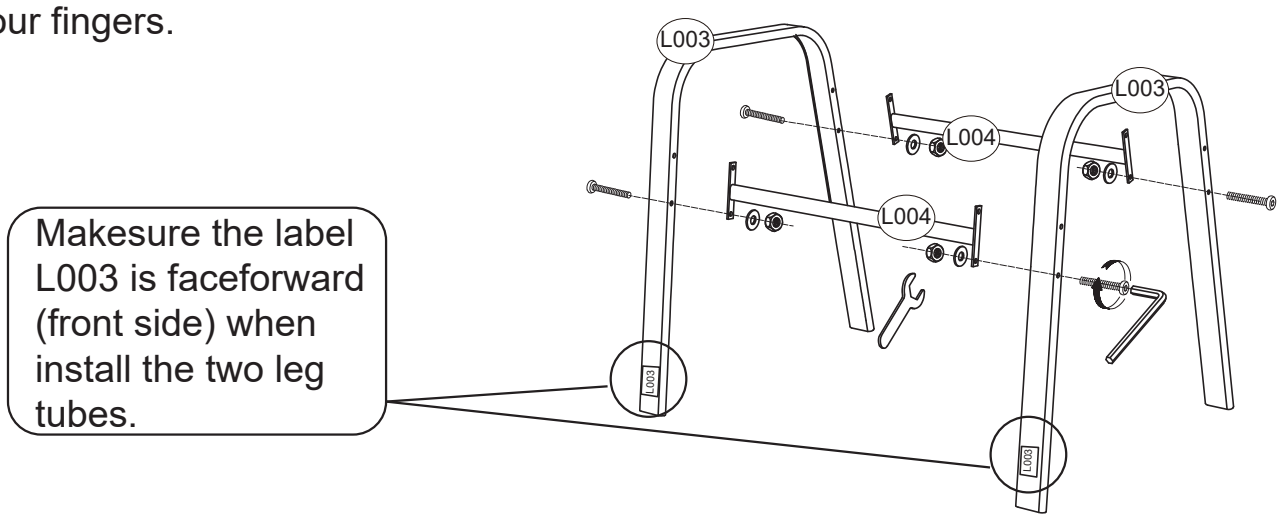

L003	x2	L004	x2		
E	x4	G	x4	J	x4

Step 4: Attach the seat section installed in step 2 to the base section installed in step 3 with screws. Install one side of the fabric tube (L001) and the leg(L003) at first,screw on 20% only, and then install the other side, you need to buckle the seat tube (L001) and leg (L003) with appropriate force, so that the screws can be tightened smoothly.
NOTE: Tighten the screws to 50% tightness. Be careful not to pinch your fingers.

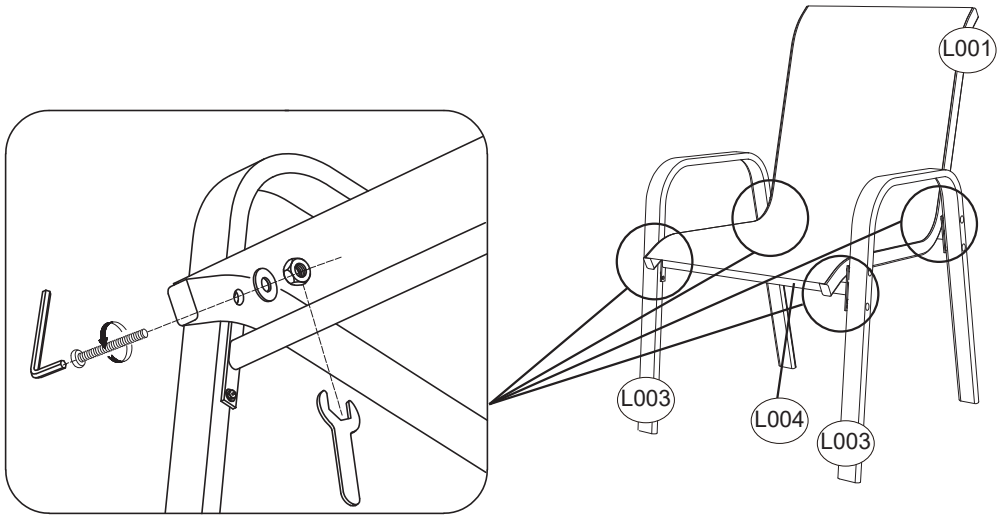

F	x4	G	x4	J	x4

Step 5: Adjust the chair balance,then tightenall the screws to 100%'tightness. Finally, install the 2 different sizes of plastic caps (M&N) in place as shown.

NOTE: Be careful not to pinch your fingers.Please tighten all screws.

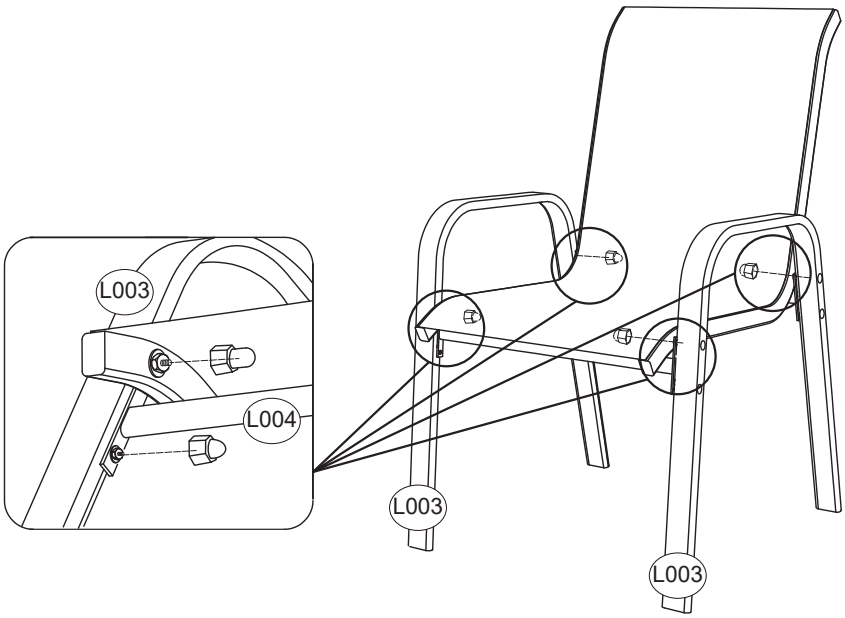

M		x4	N		x4