MANUAL INSTRUCTION

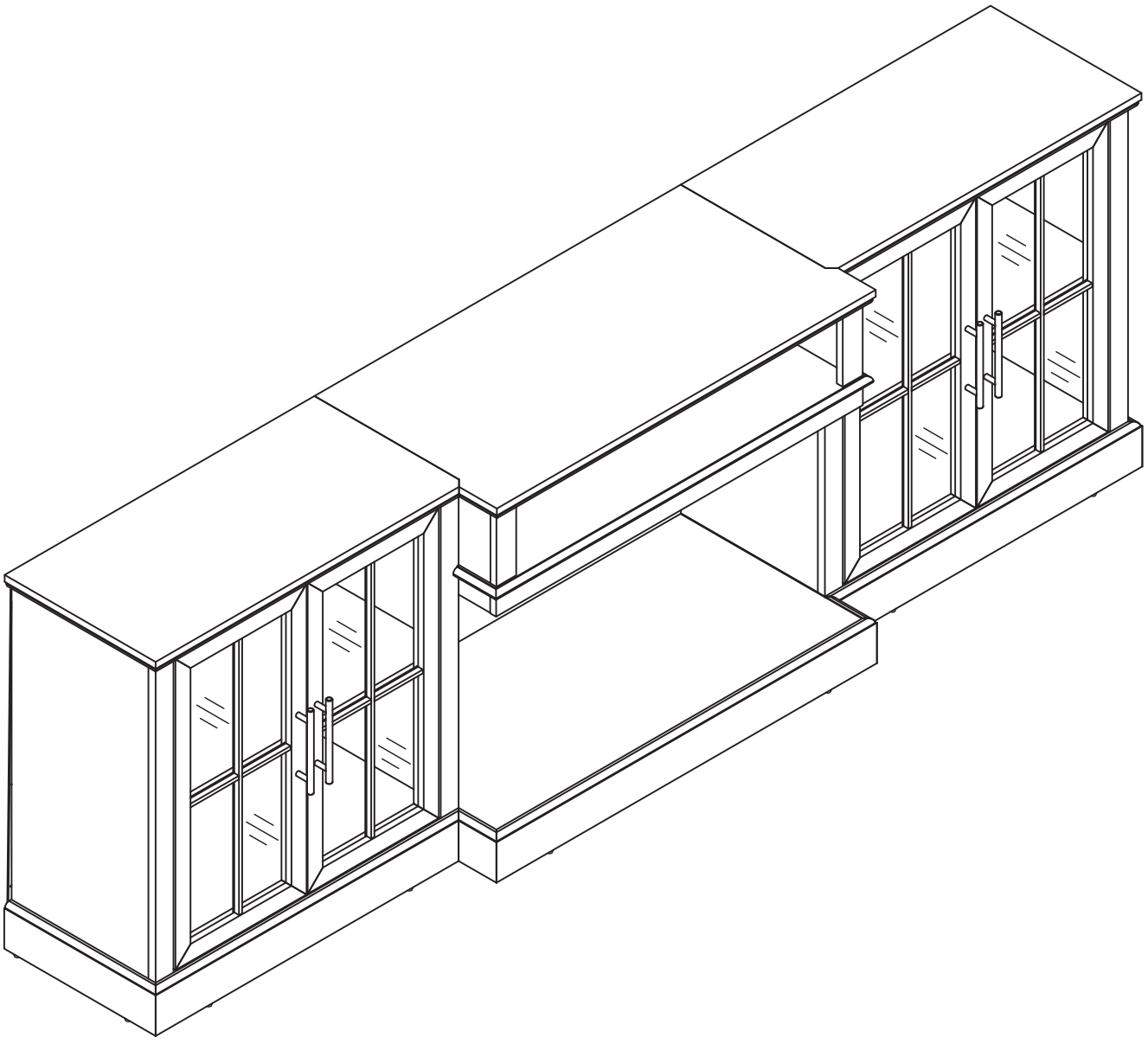

(24/7):service@kmcgloble-us.com

(USA) +1 213-816-4788

ATTENTION

1. The product must be assembled and used according to the manual. The seller is not liable for any damage caused by incorrect assembly or misuse.
2. Do not sit or stand on the product.
3. Place the item on a flat surface.
4. Keep small parts away from children to avoid choking hazards.
5. Keep product away from corrosive gases, liquids and dusty environment.
6. Keep the original box(es) until assembly is complete or no quality issues need to be confirmed.

AFTER-SALE SERVICE

If you have any suggestions or encounter quality issues with our products, please contact us first. Our after-sales team will respond within 24 hours, and we will do our best to provide a solution until you are satisfied.

GUARANTEED CUSTOMER SERVICE

Your shopping experience is very important to us!
If you feel unsatisfied or have any questions, just contact us without any hesitation!
If you want to share how wonderful our smart product makes your home, you can share your pictures with us!
For further information, contacts immediately:

service@kmcgloble-us.com

PARTS

BOX A

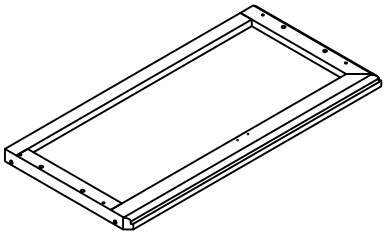

1 × 1

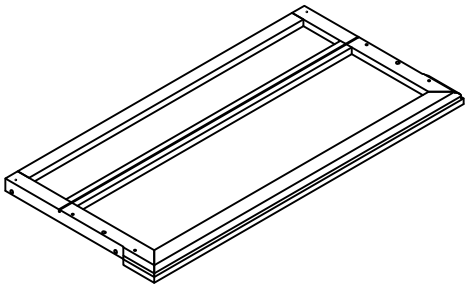

2 × 1

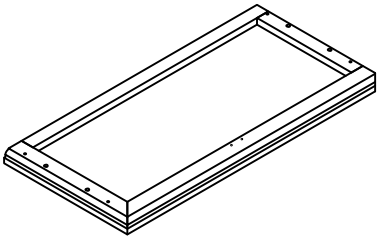

3 × 1

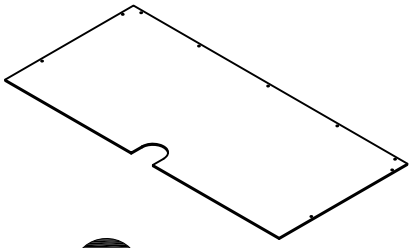

4 × 4

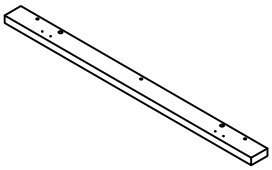

6 × 4

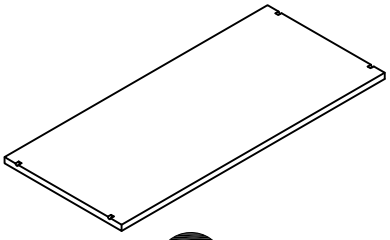

7 × 2

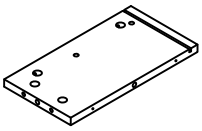

9 × 1

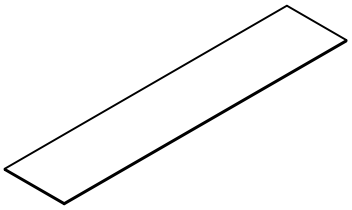

10 × 1

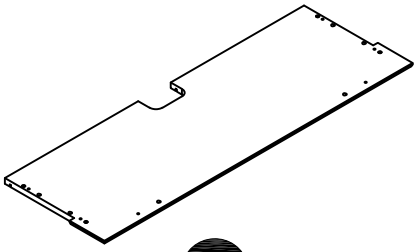

11 × 1

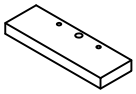

12 × 2

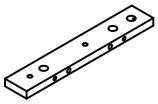

13 × 1

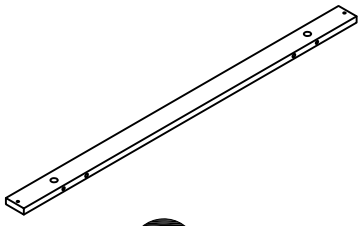

14 × 1

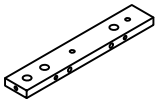

15 × 1

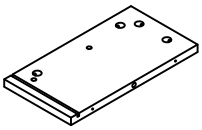

16 × 1

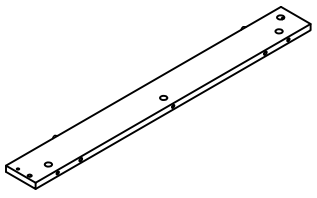

19 × 1

PARTS

BOX A

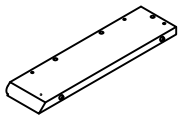

20 × 1

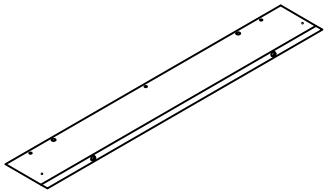

22 × 1

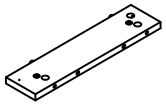

23 × 1

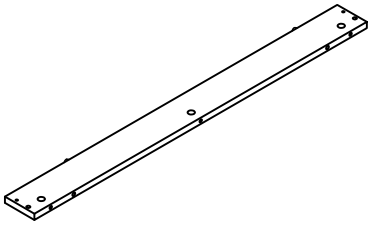

24 × 1

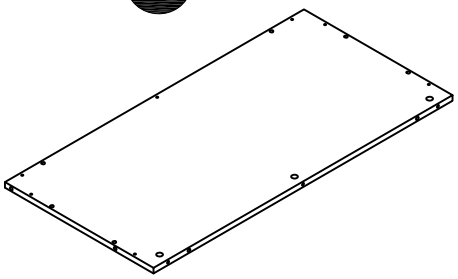

25 × 1

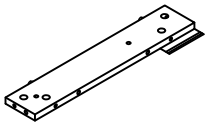

26 × 1

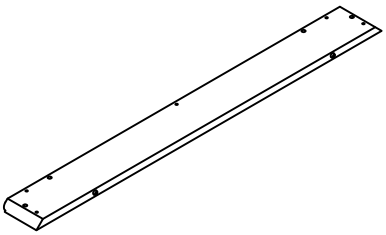

27 × 1

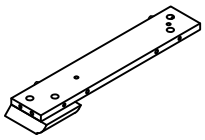

28 × 1

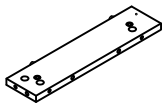

29 × 1

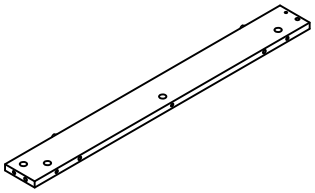

30 × 1

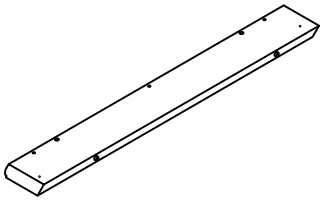

32 × 1

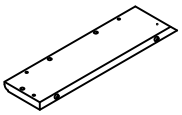

33 × 1

HARDWARE

BOX A



Ø15X11mm

A ×75+3



Φ6.5x35mm

B ×75+3



Φ8x30mm

C ×76+3



Ø6.3X50mm

D ×8+1

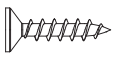

Φ3.5x14mm

E ×28+2

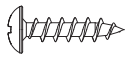

Φ3x14mm

F ×40+2



M6X30mm

G ×12+2



M4**x22mm**

H ×8+1



Φ4x40mm

J ×4+1



K ×6

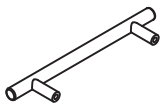

L ×4

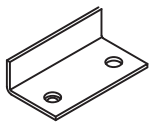

M ×2

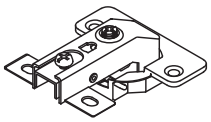

N ×8

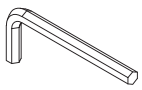

M4**x65mm**

P ×1



Q ×8+1

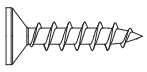

Φ4x14mm

R ×16+2

PARTS

BOX B

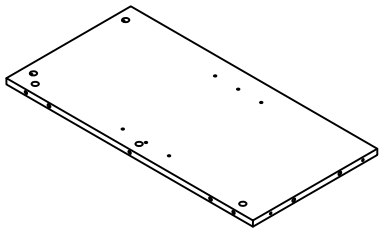

5 ×1

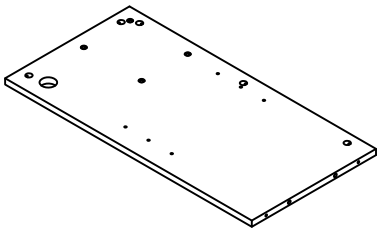

8 ×1

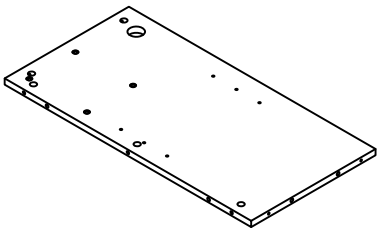

17 ×1

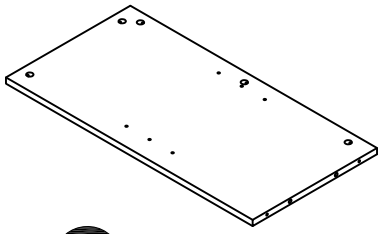

18 ×1

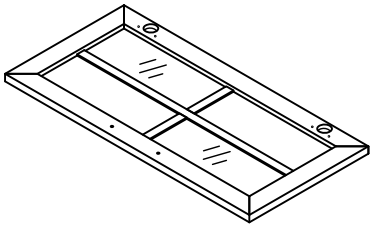

34 ×2

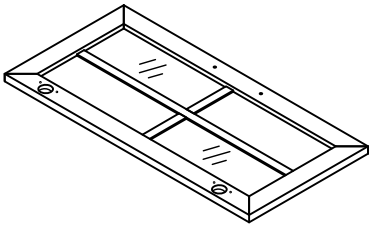

35 ×2

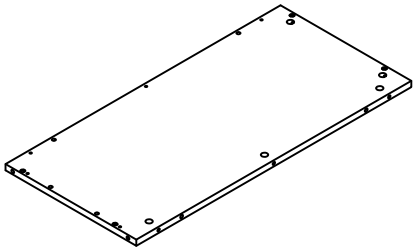

21 ×1

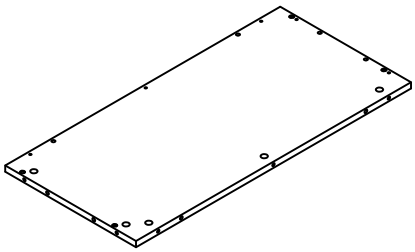

31 ×1

Open the secondary component package and retrieve hardware for next assembly step.

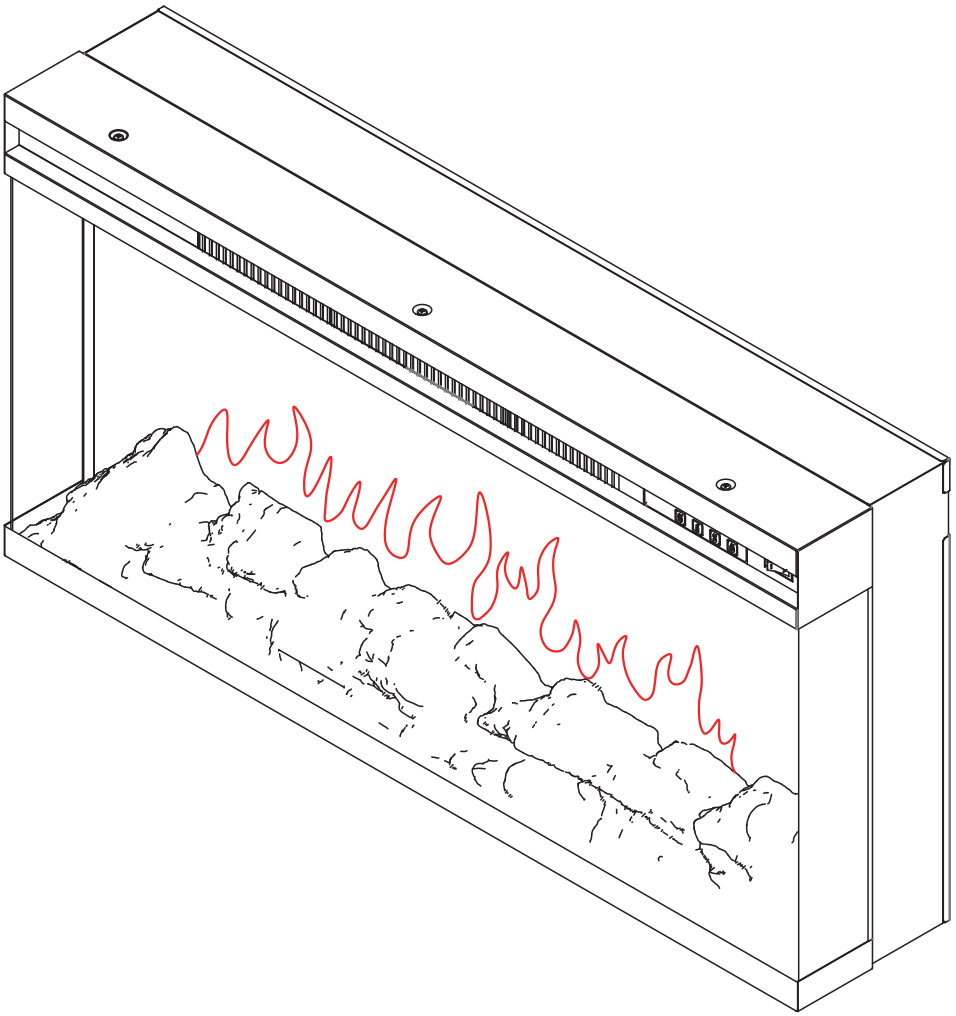



X2



X1

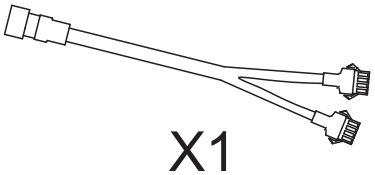

X1



M4*8
X4



M4*12
X2



M3*12
X4

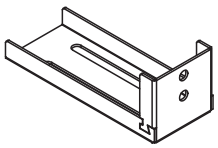

X2

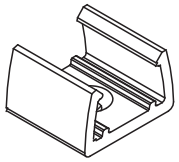

X4

EXPLOSION VIEW

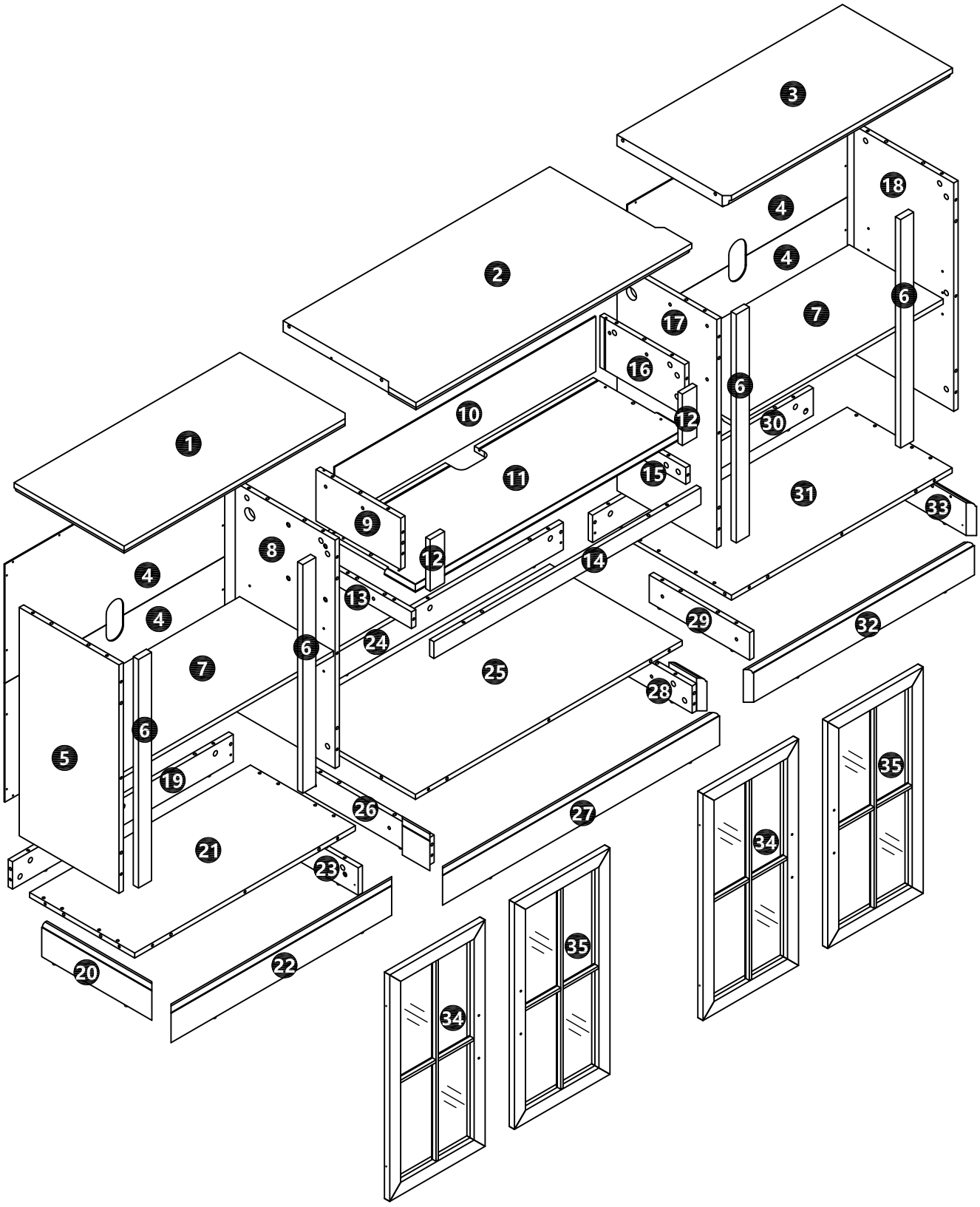

1

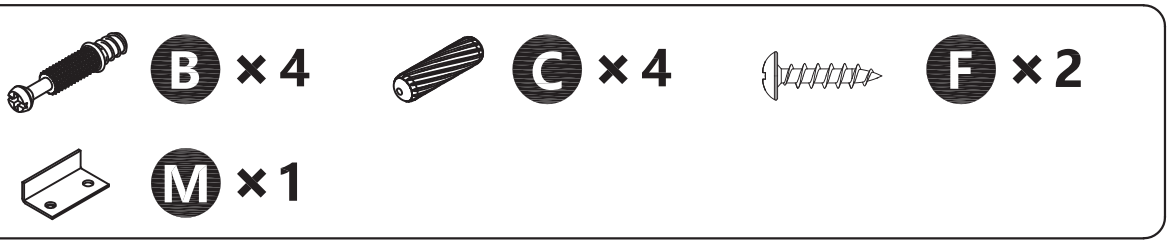

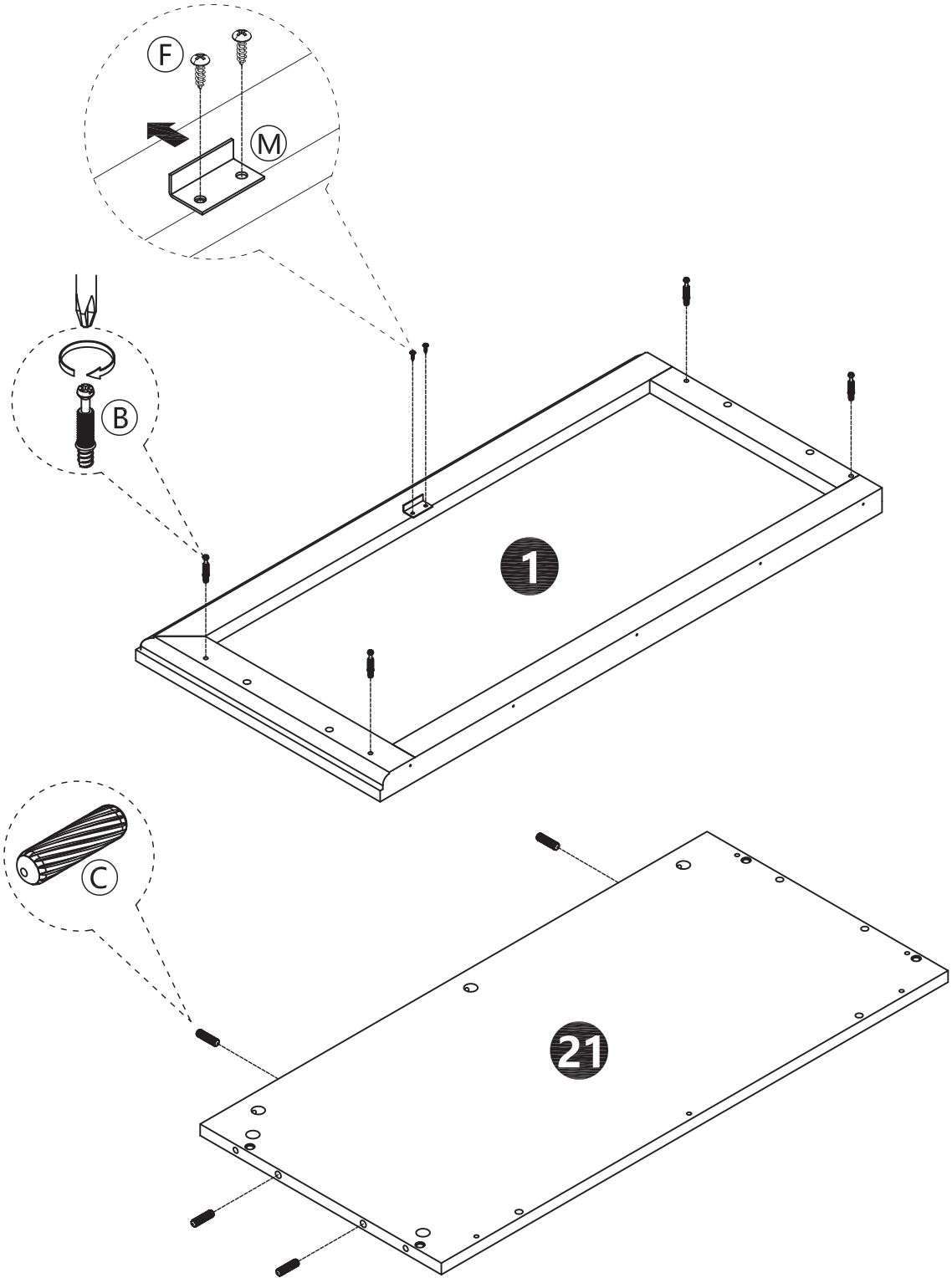

2

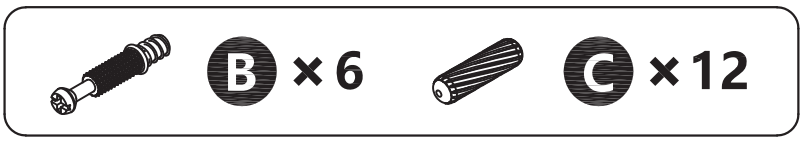

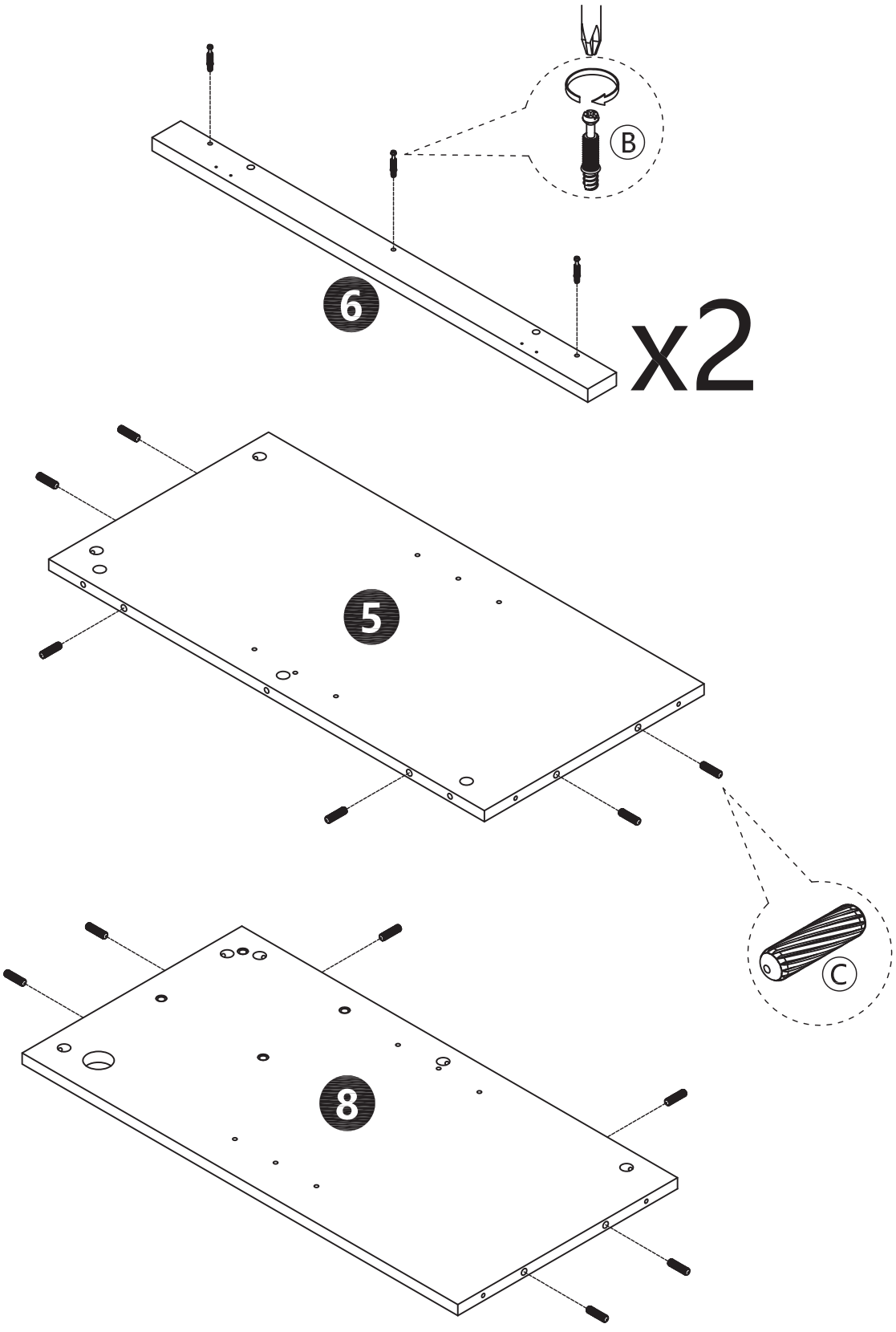

3

A ×6

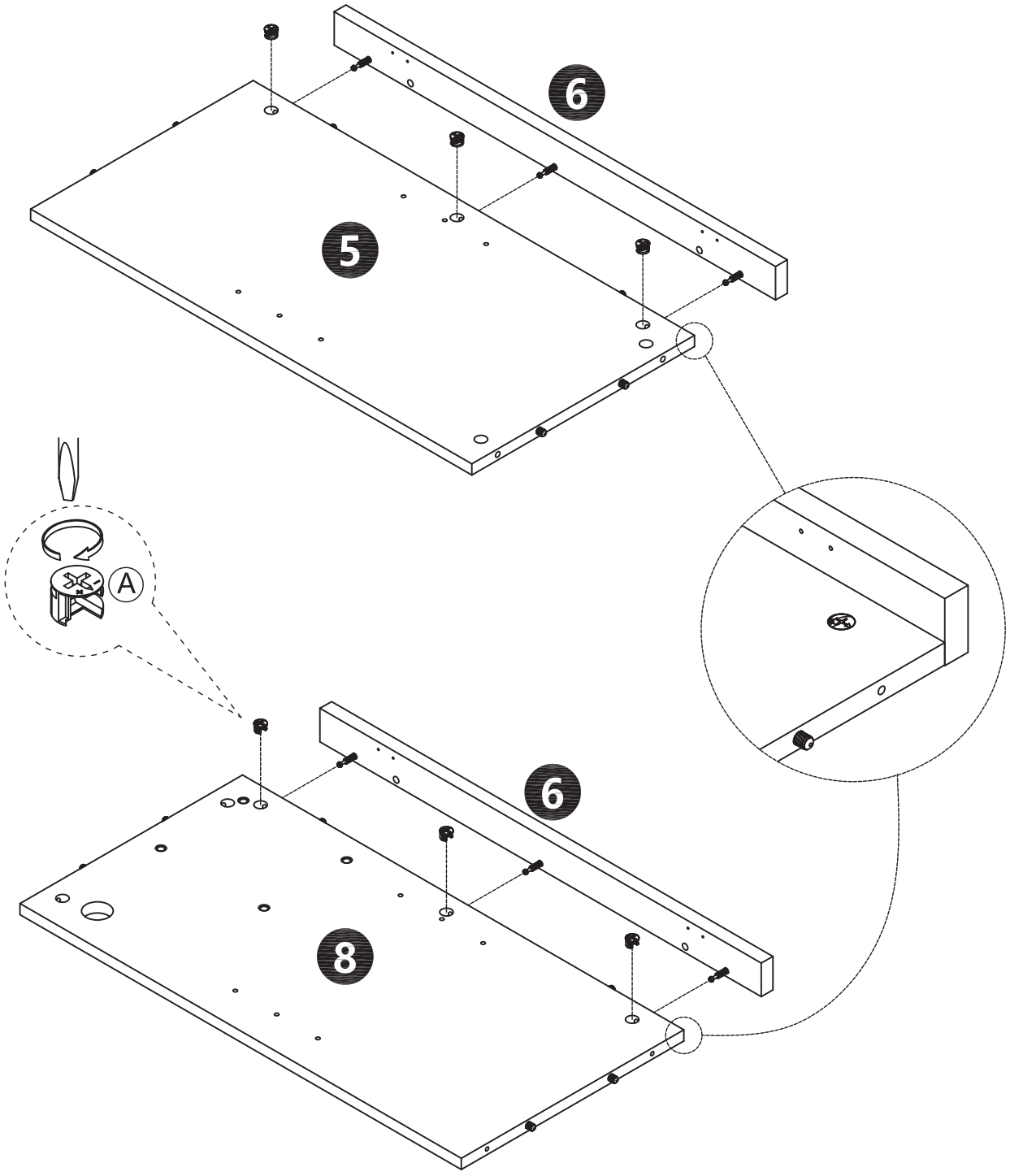

4


A ×4

B ×6
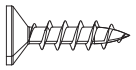
E ×1

K ×1

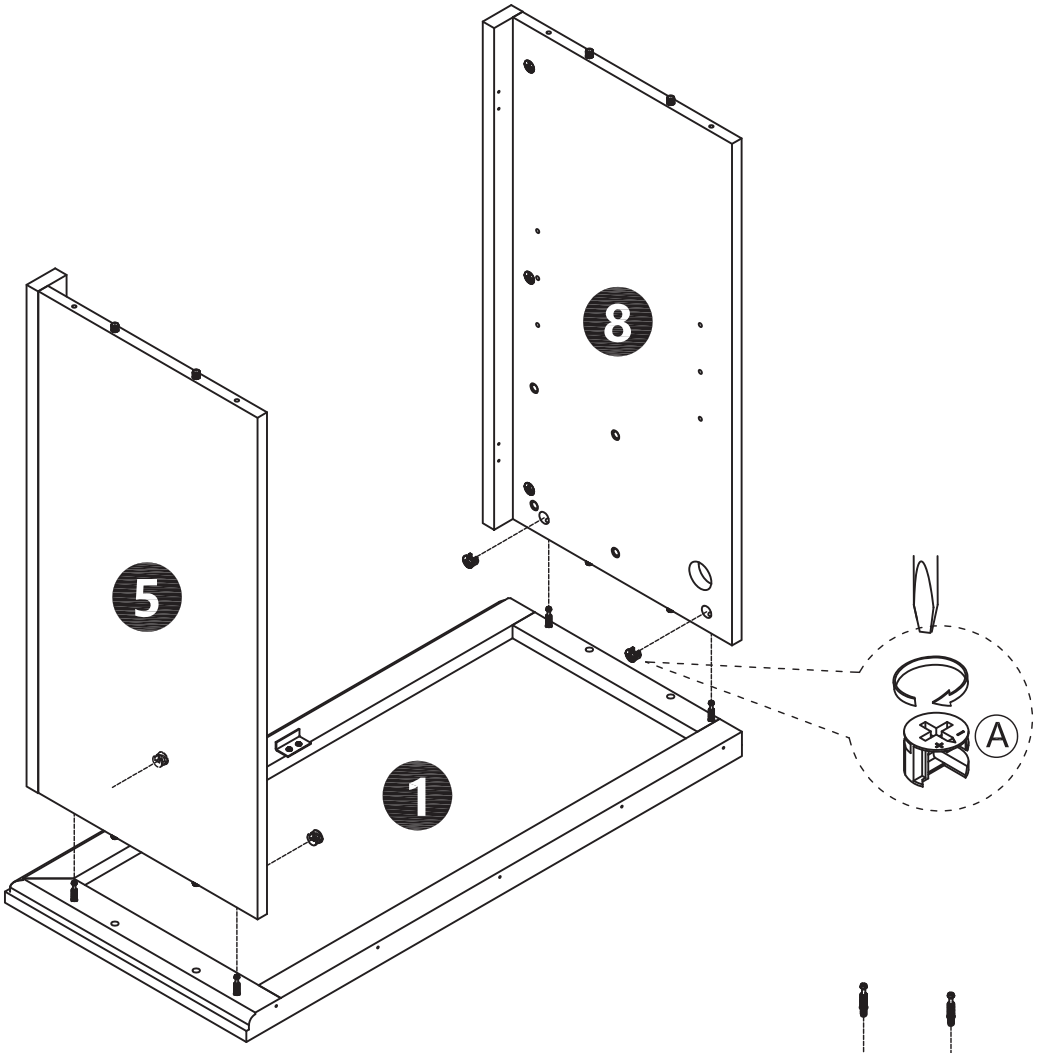

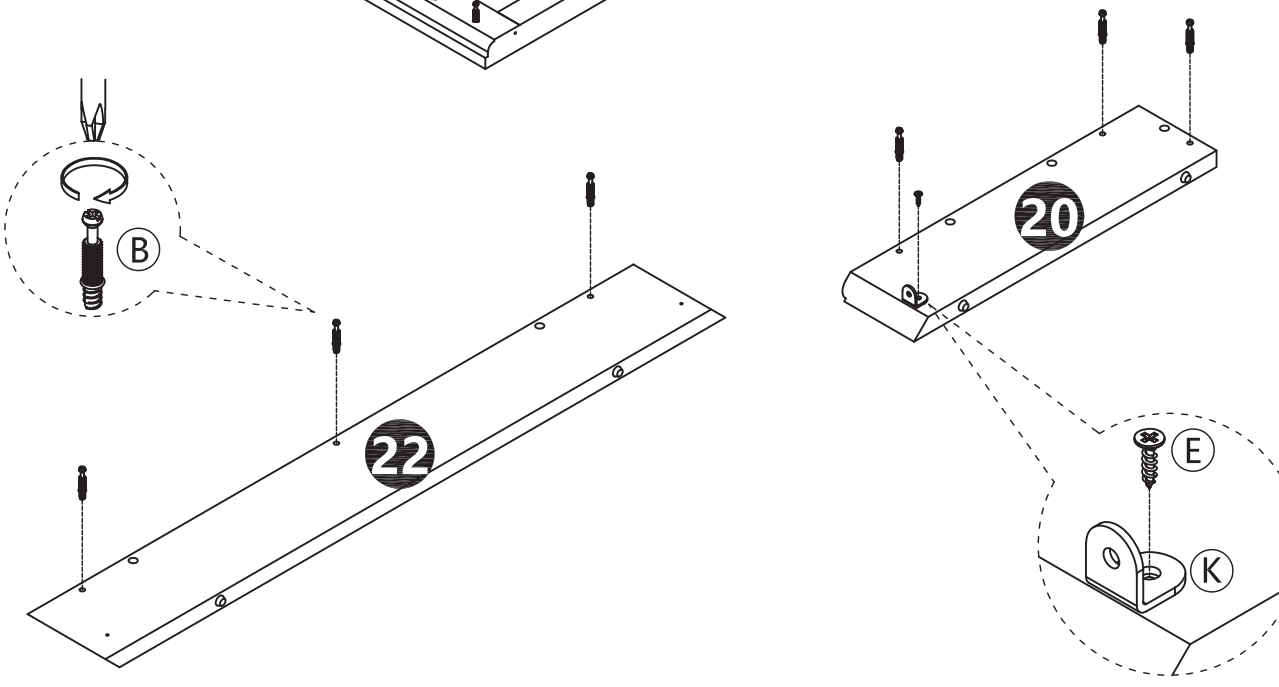

5

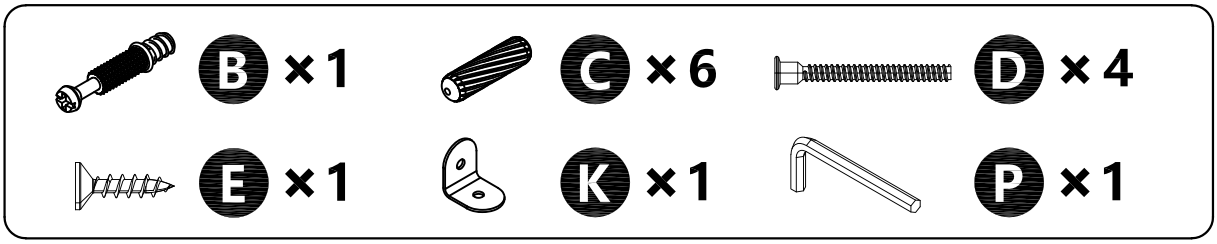

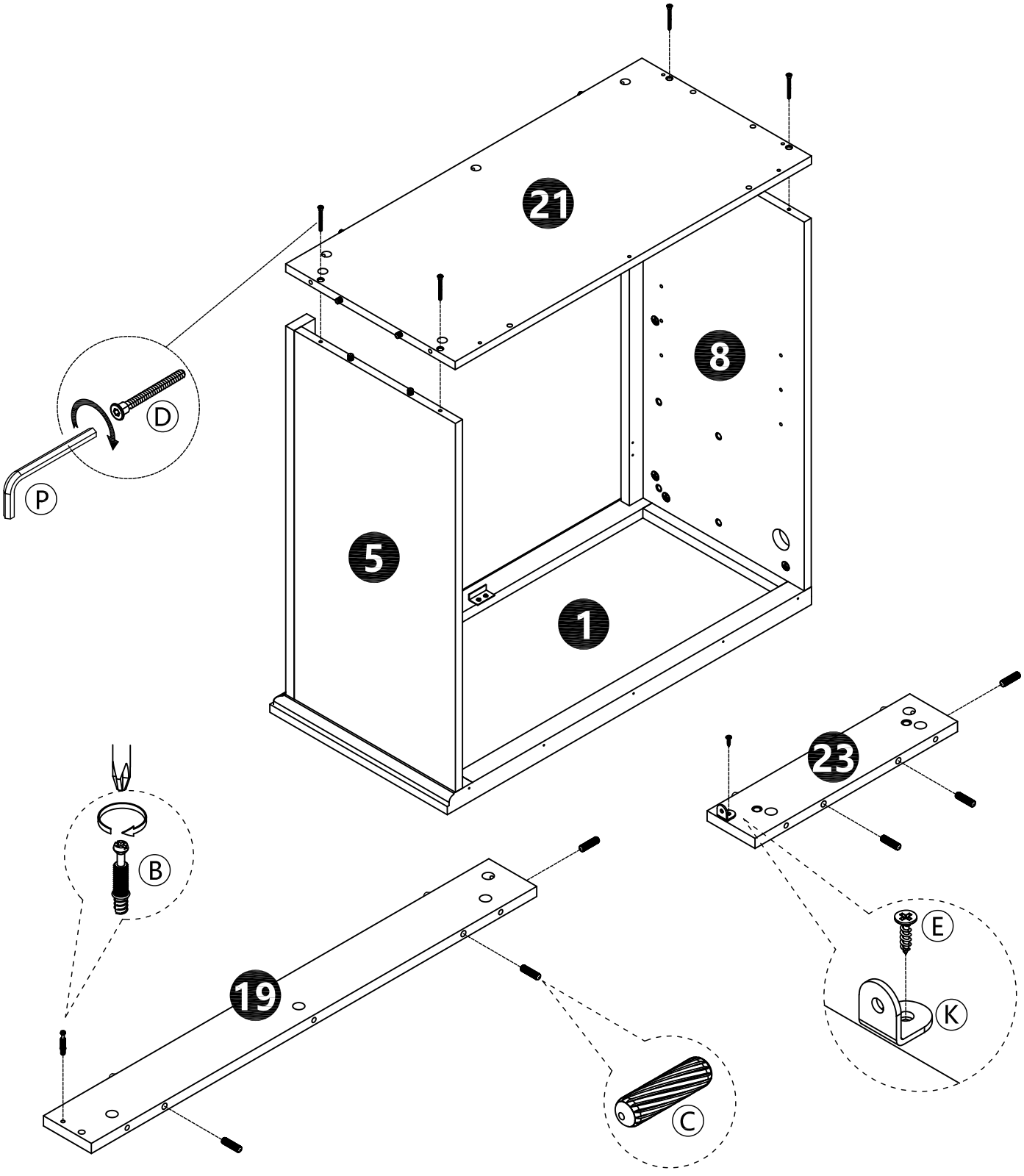

6

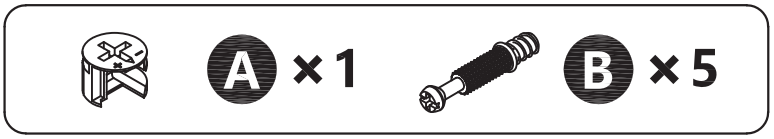

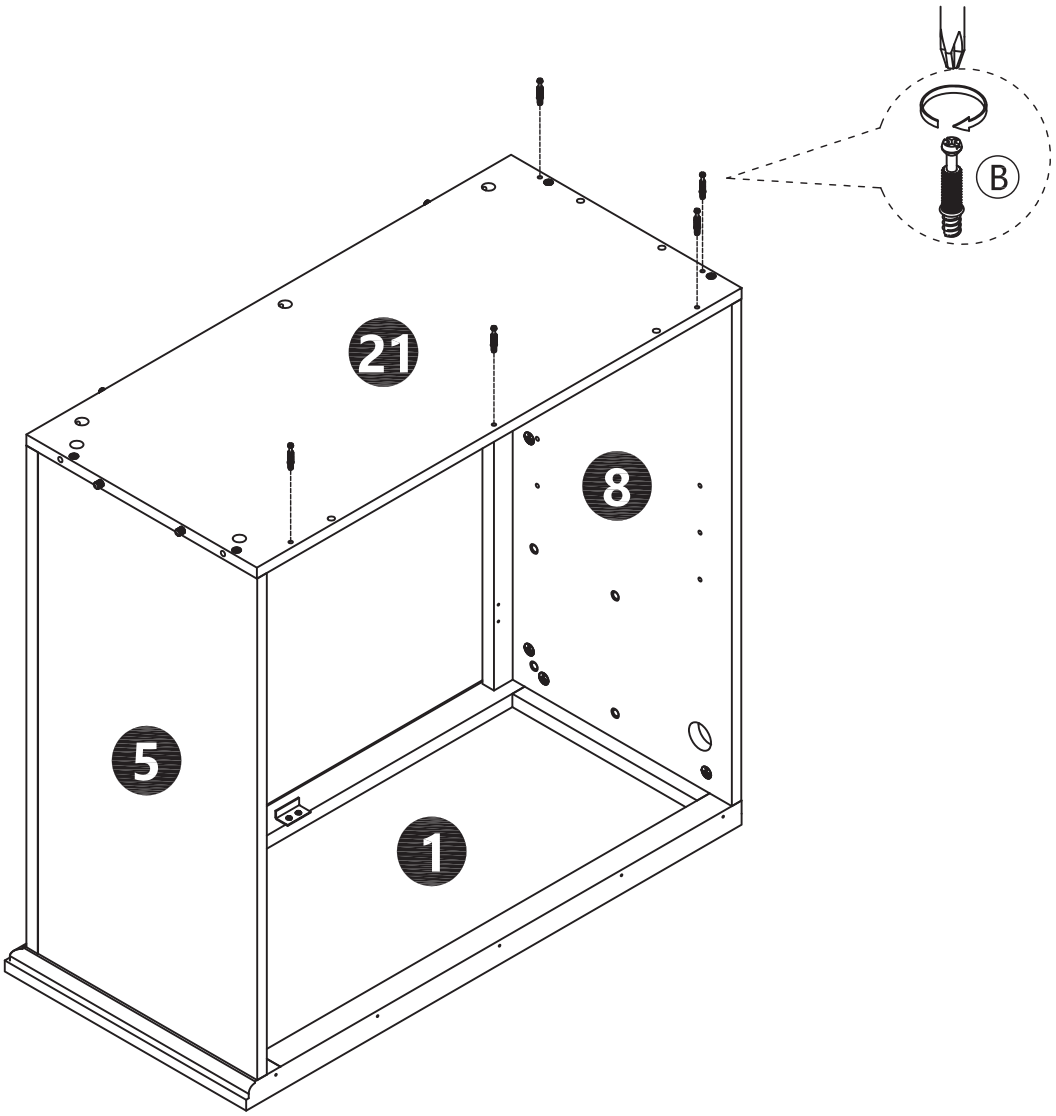

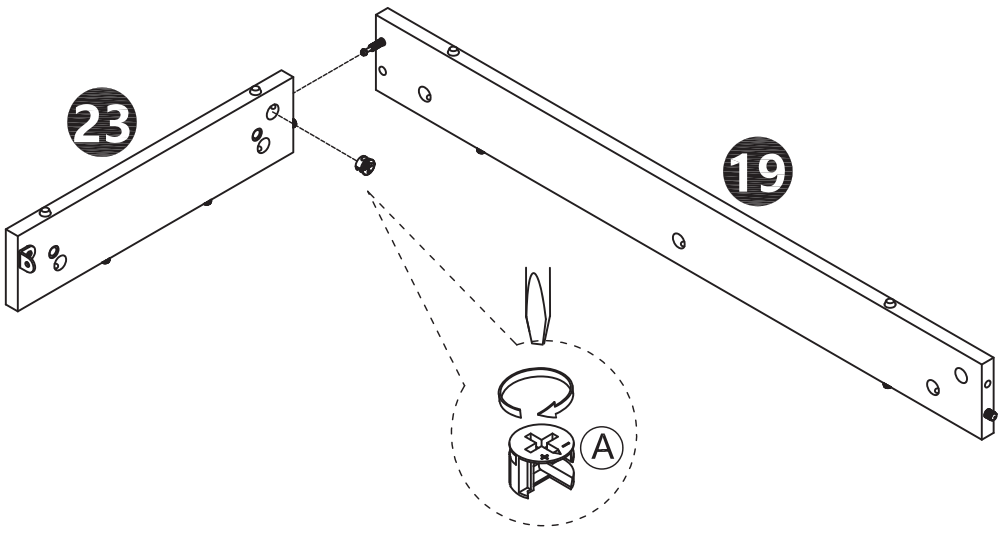

7

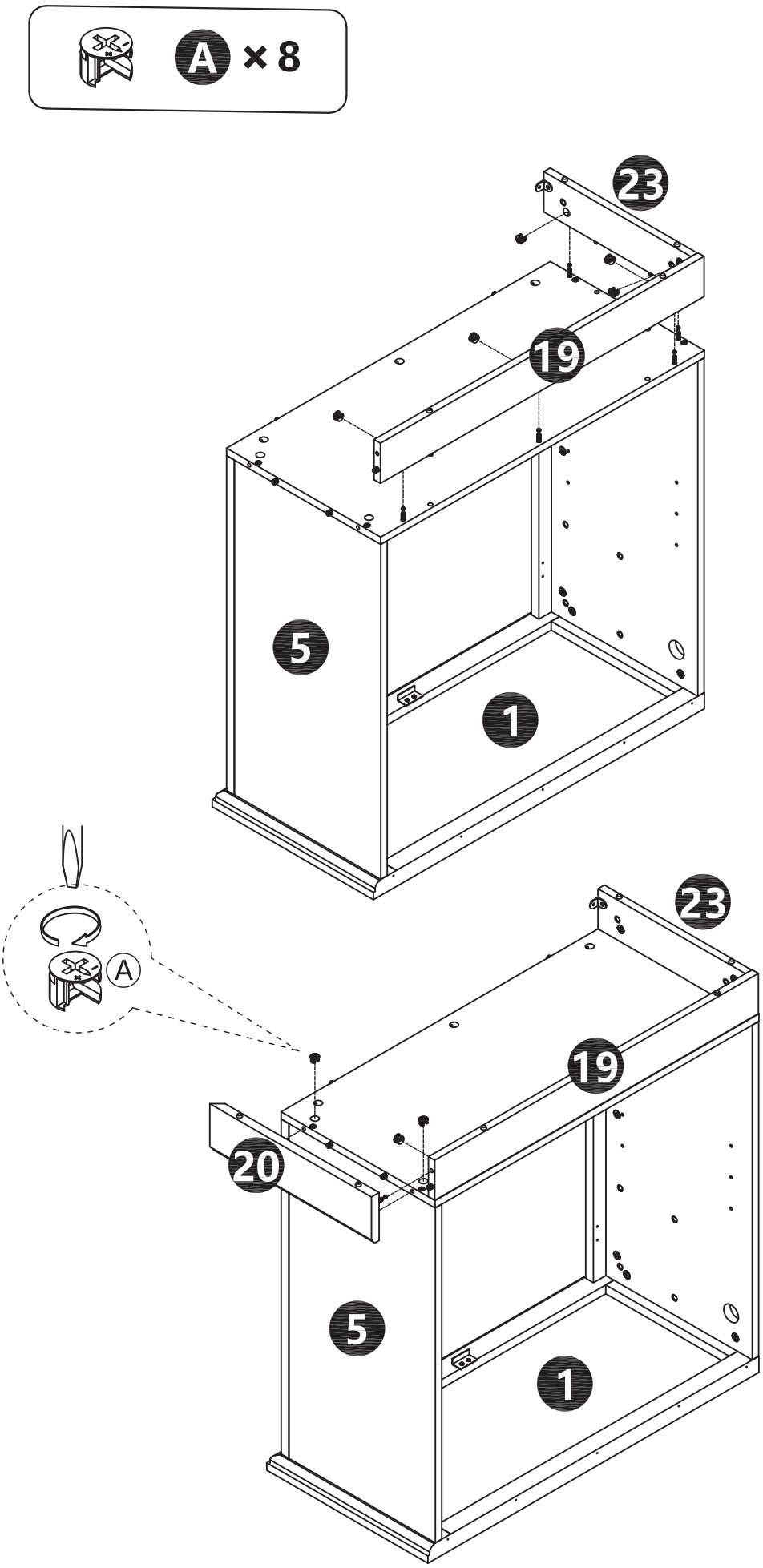

8

A ×3 E ×2

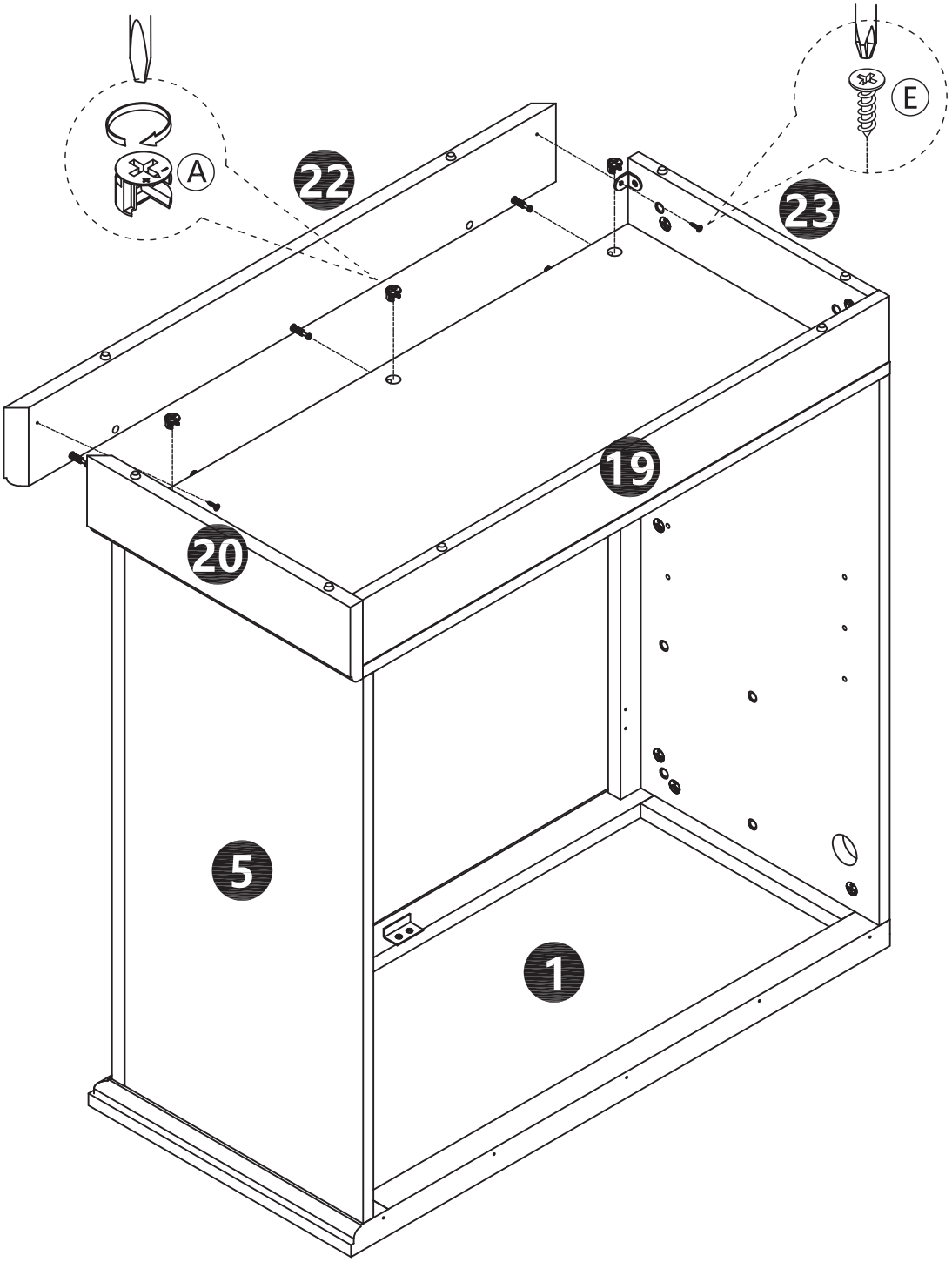

9

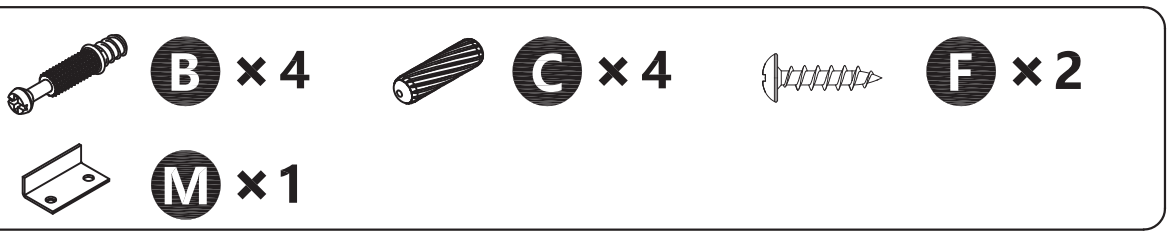

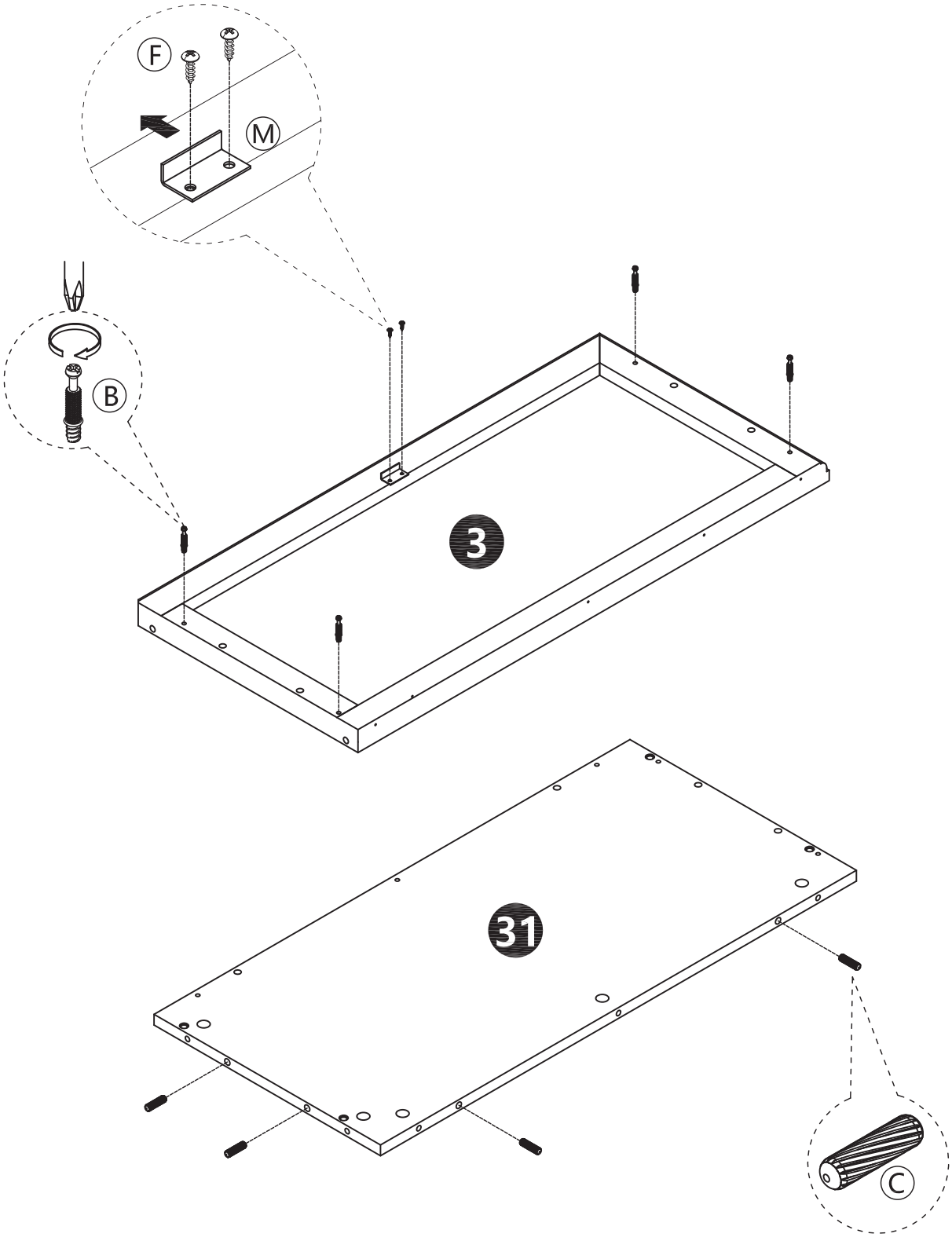

10

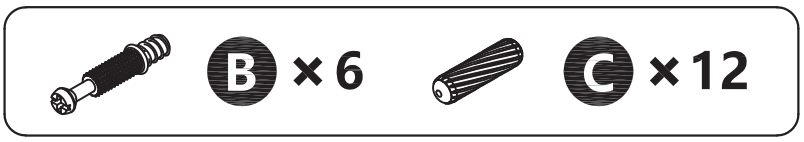

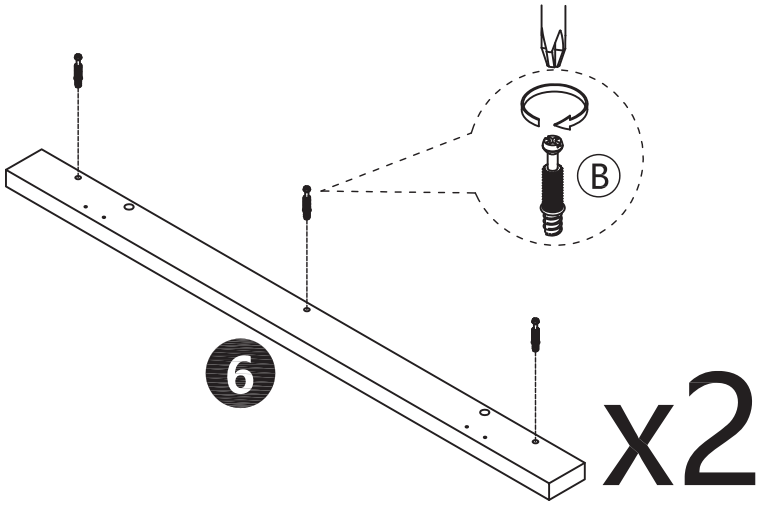

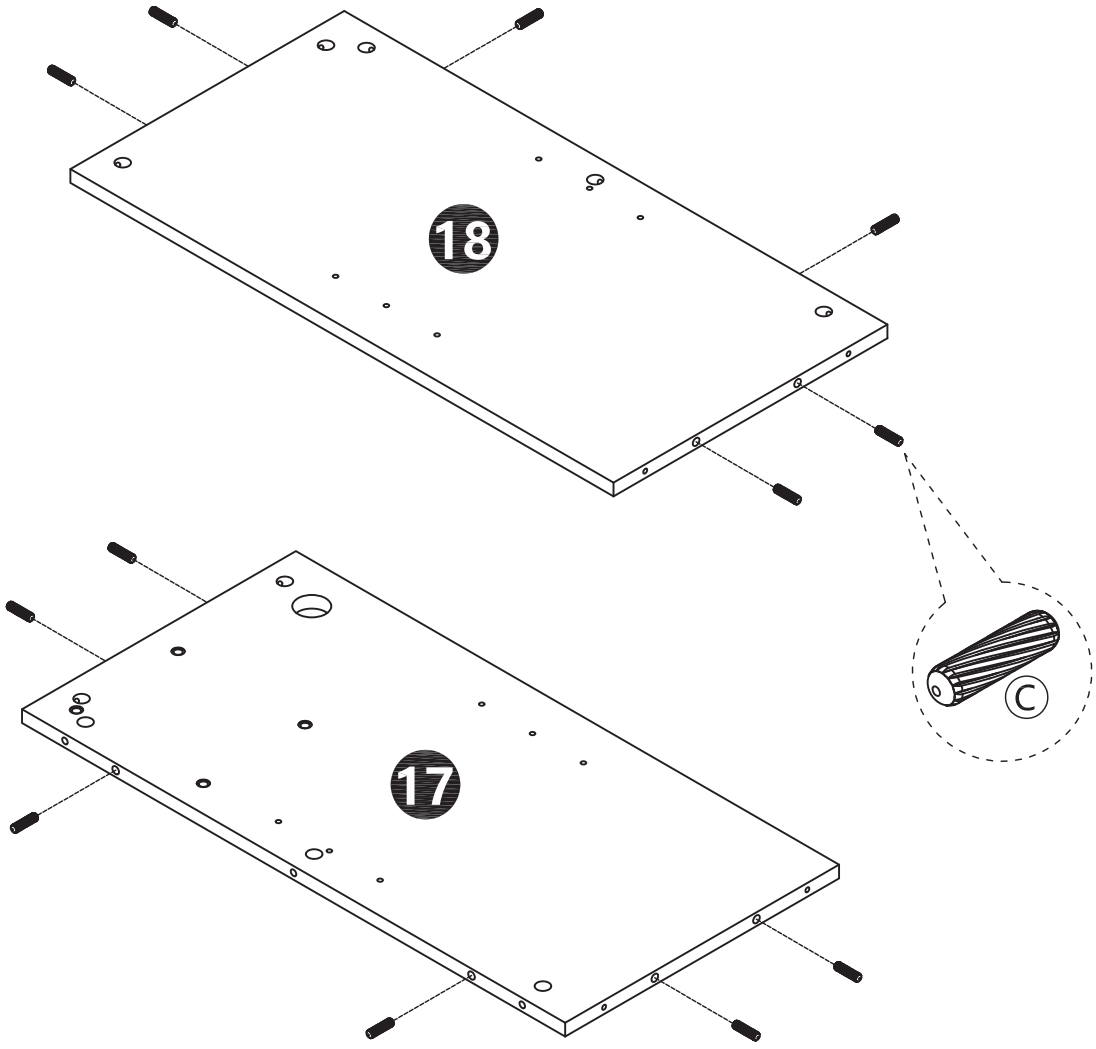

11

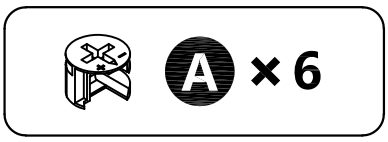

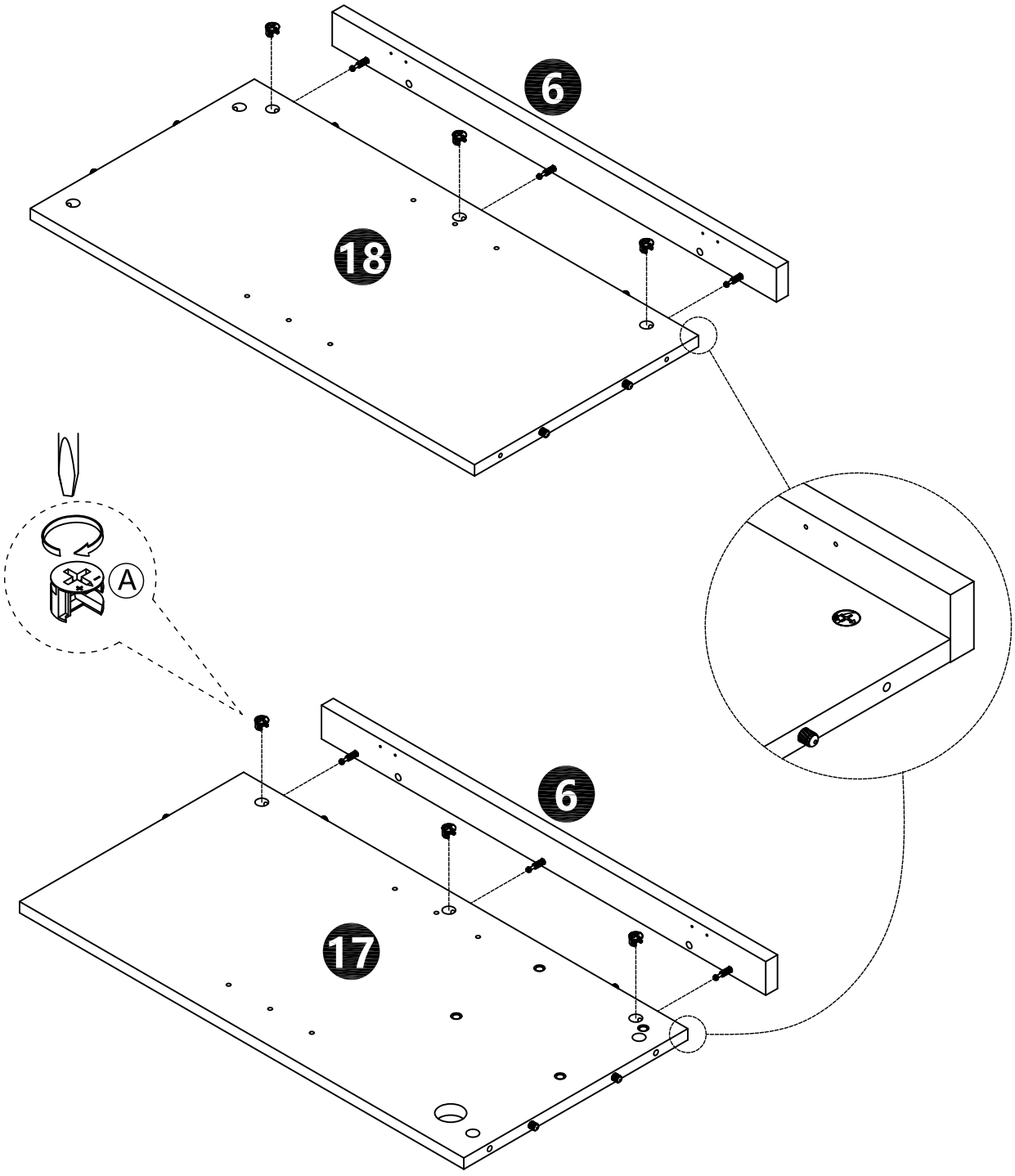

12

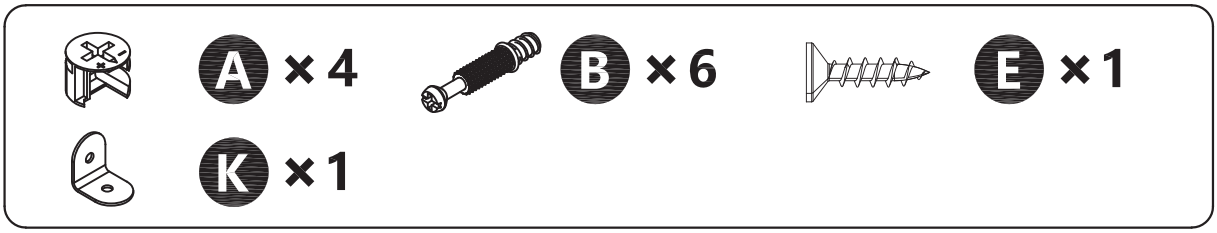

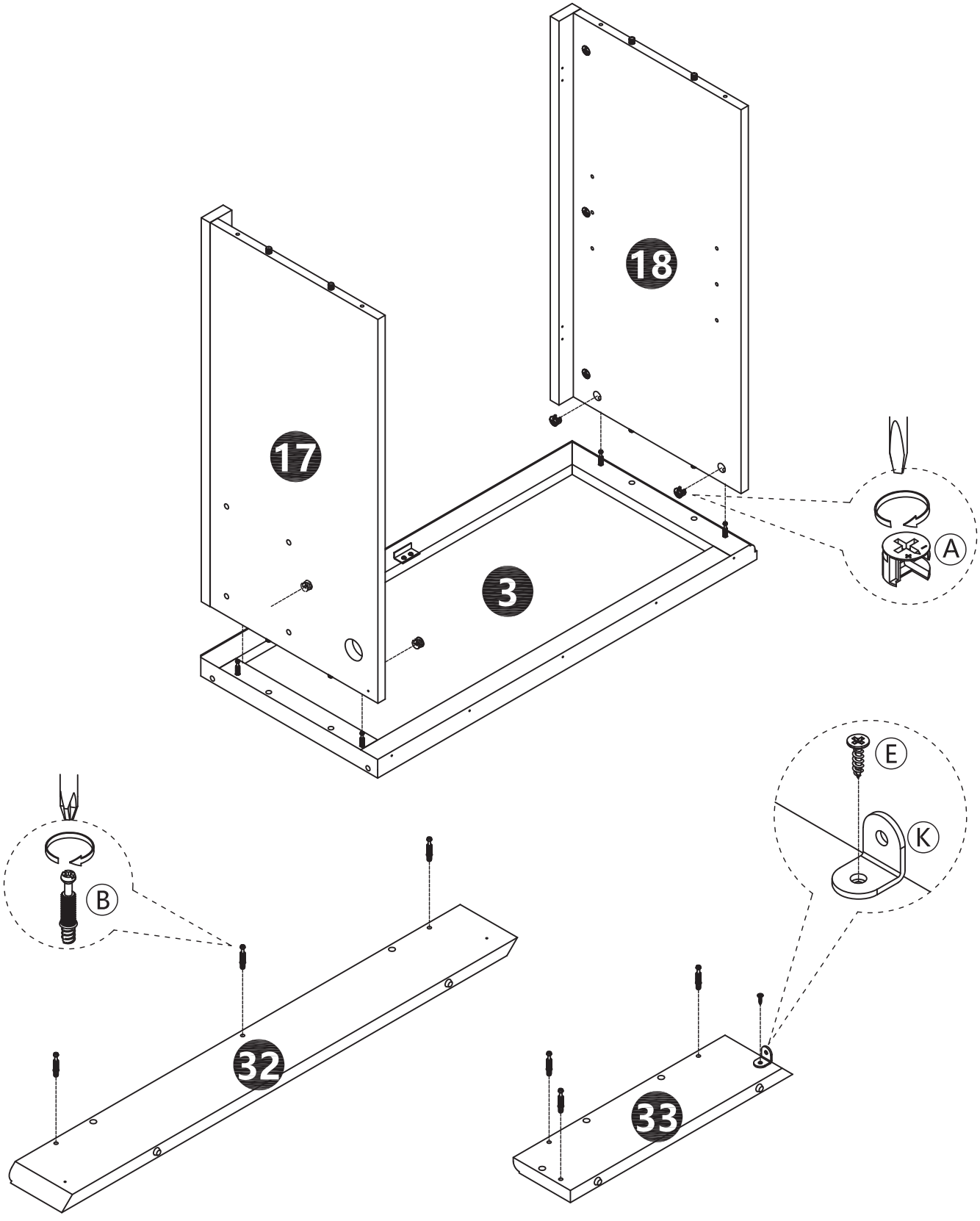

13

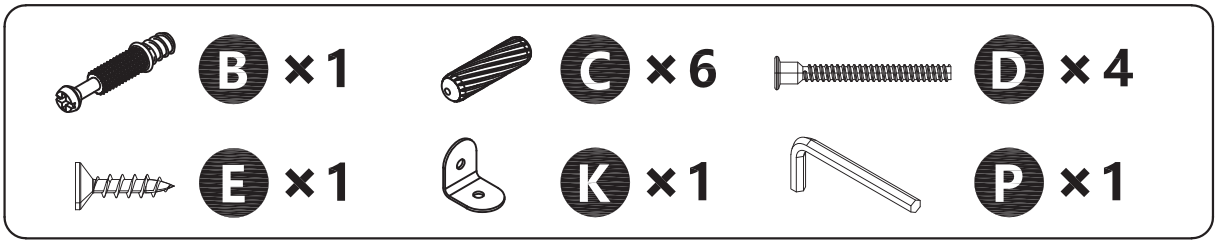

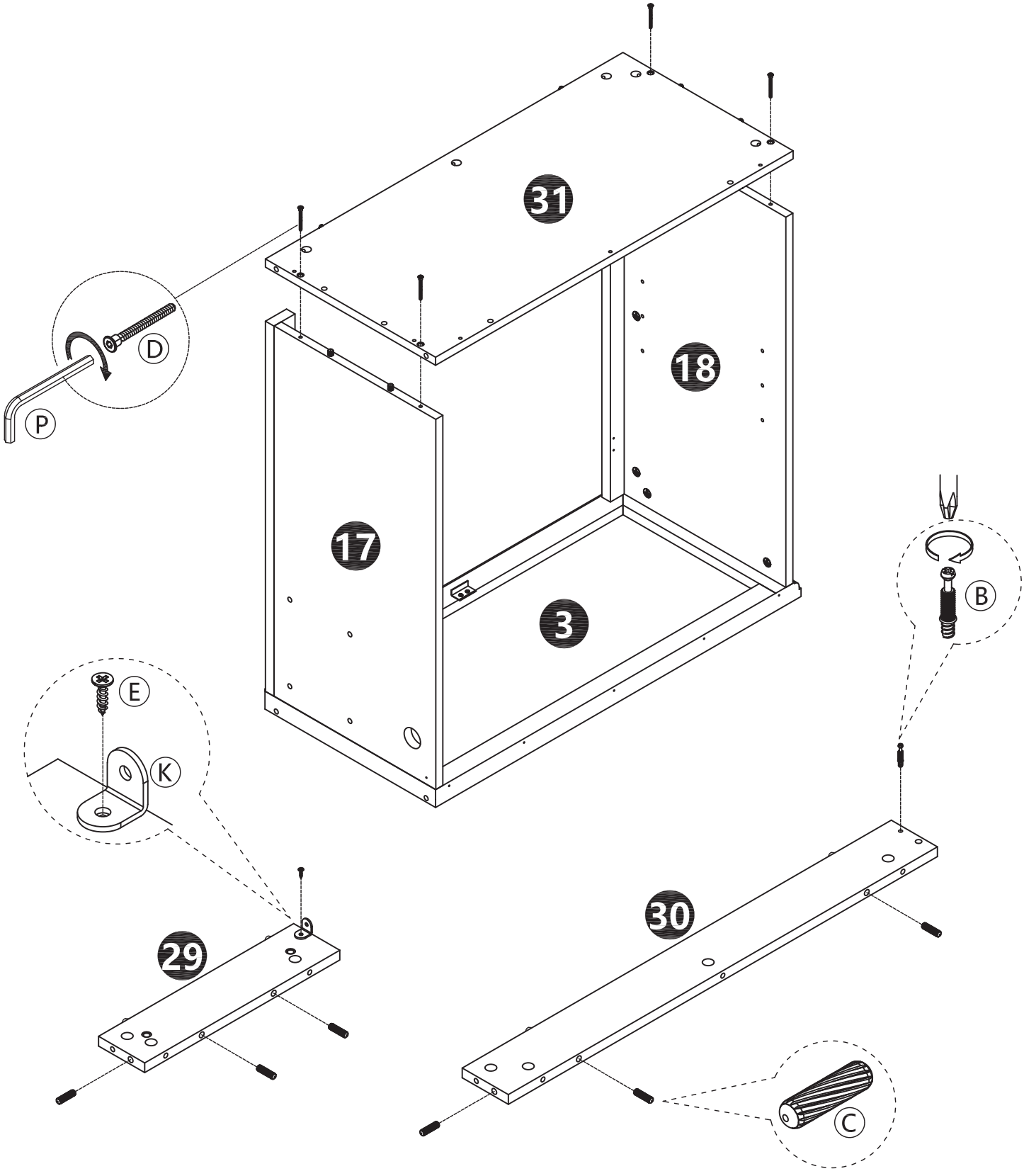

14

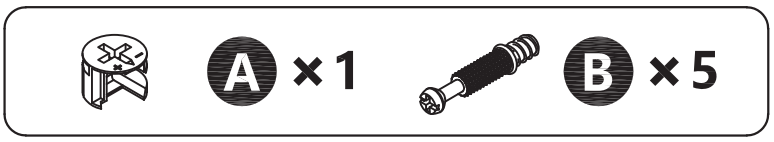

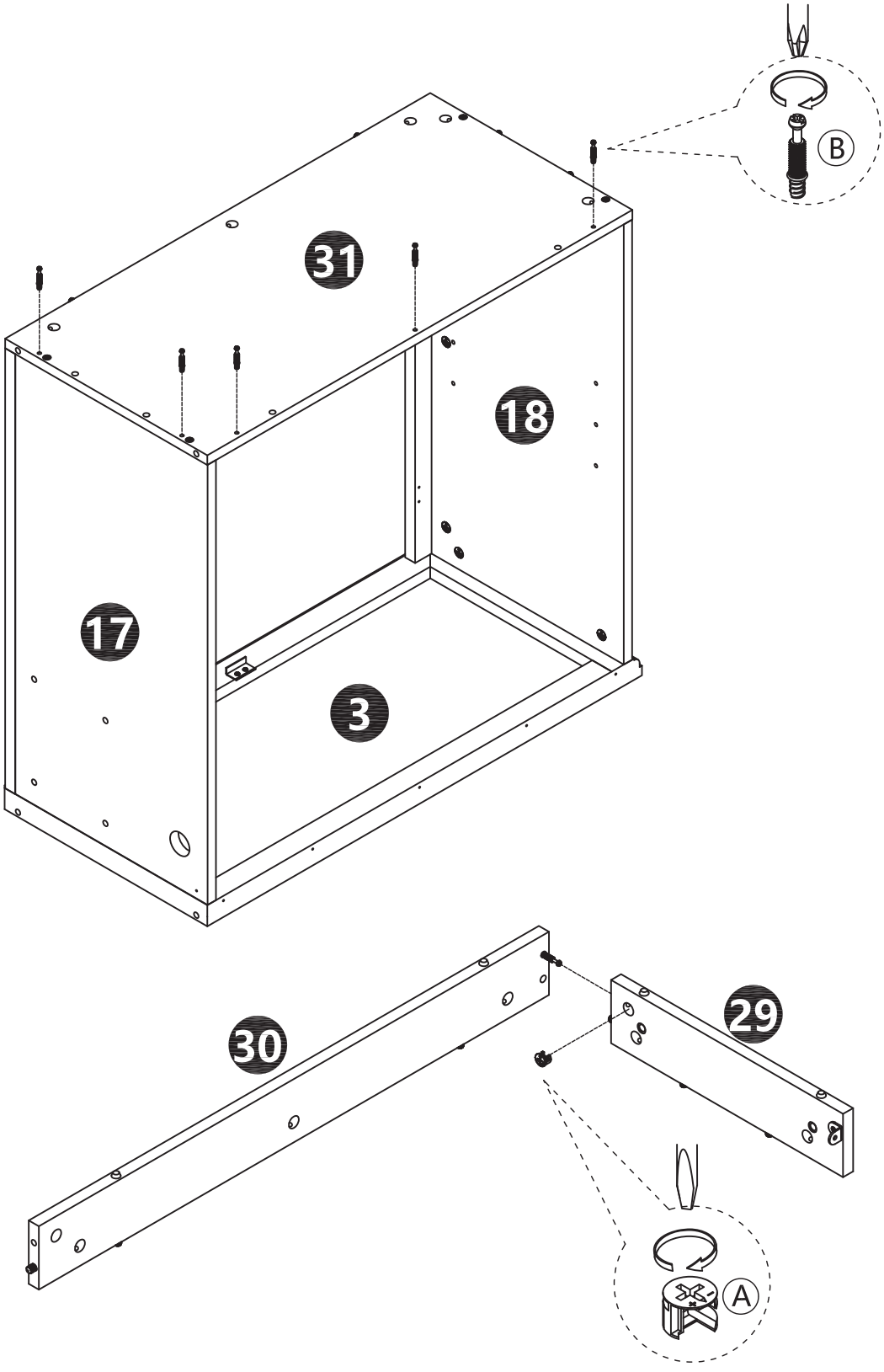

15

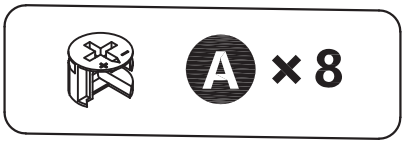

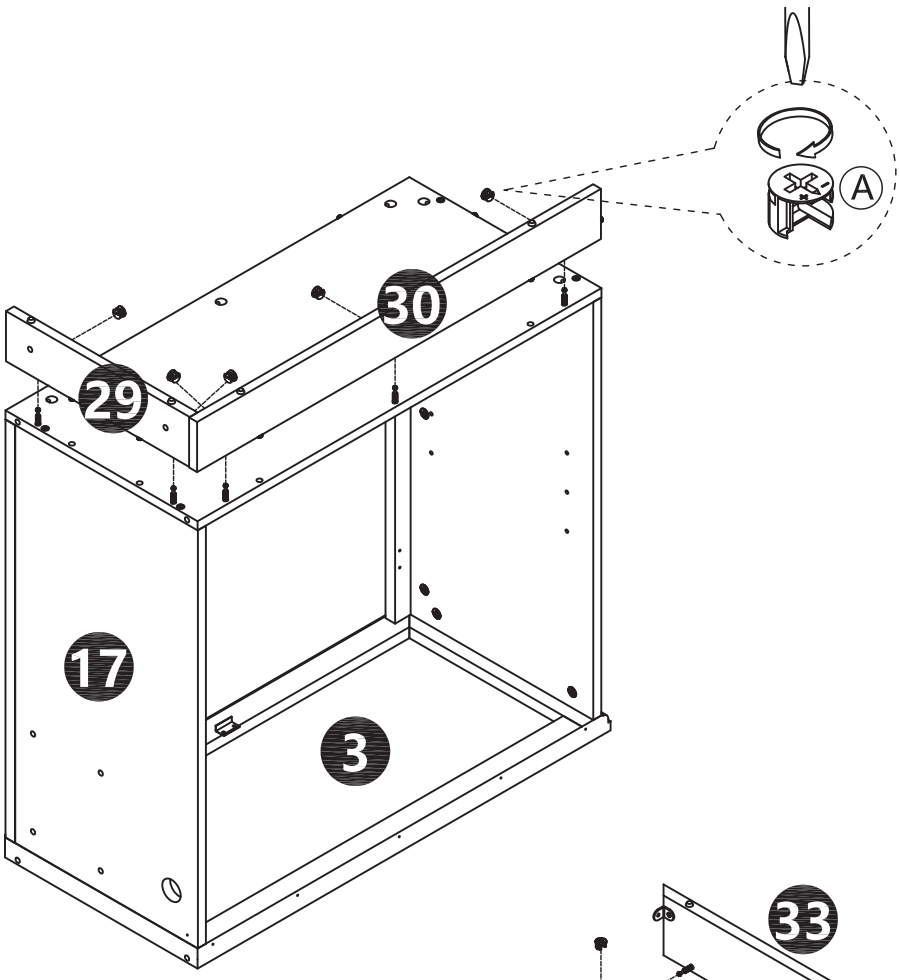

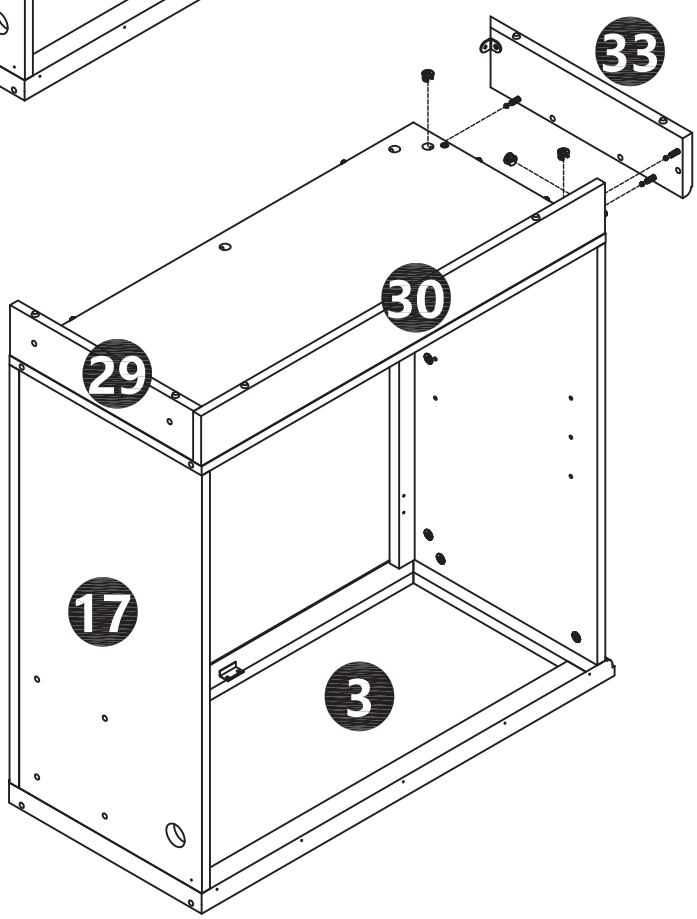

16

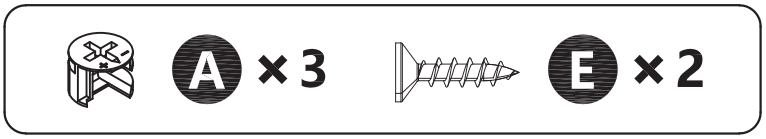

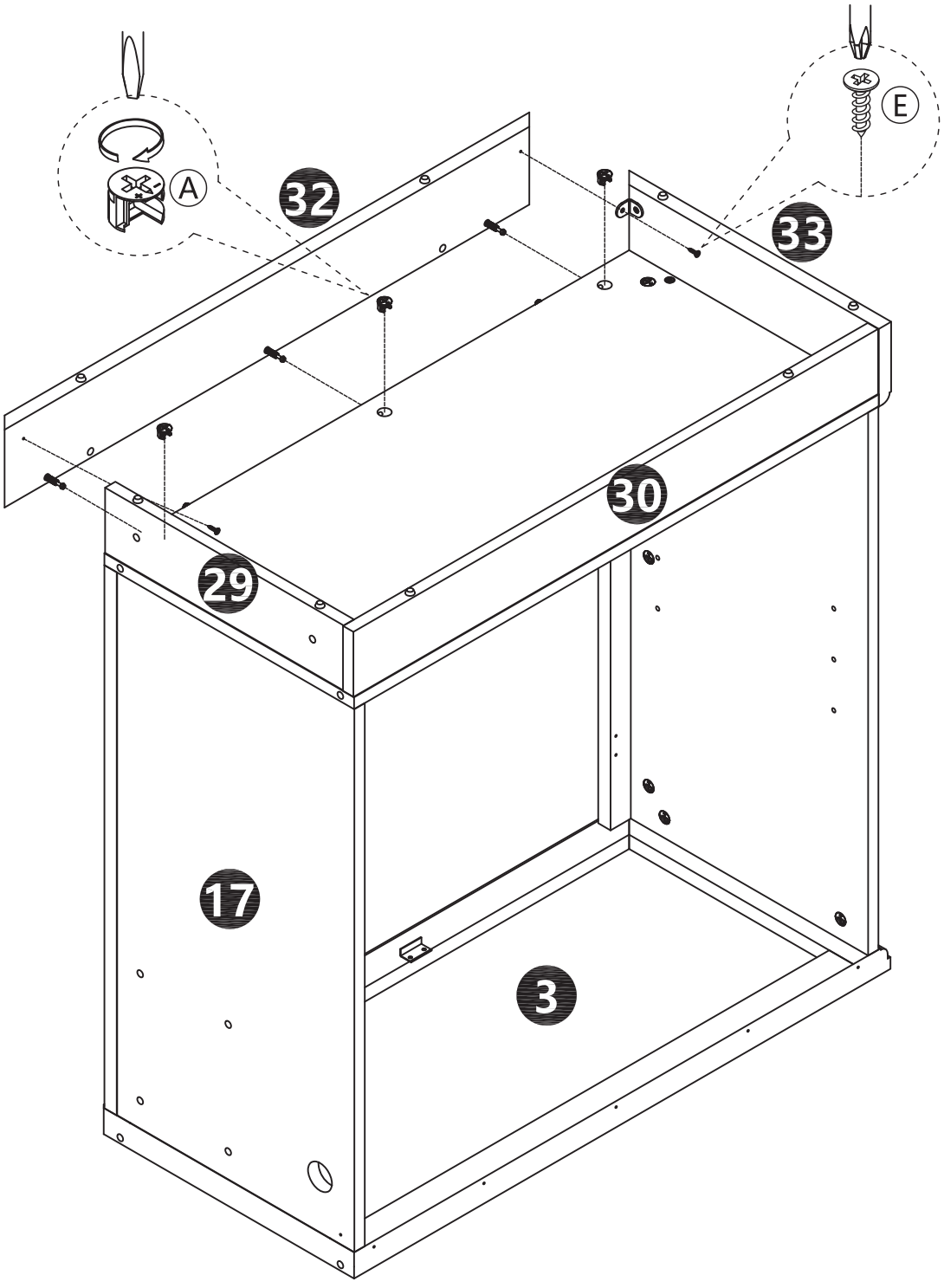

17

 B × 8  C × 10 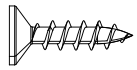 E × 2

 K × 2

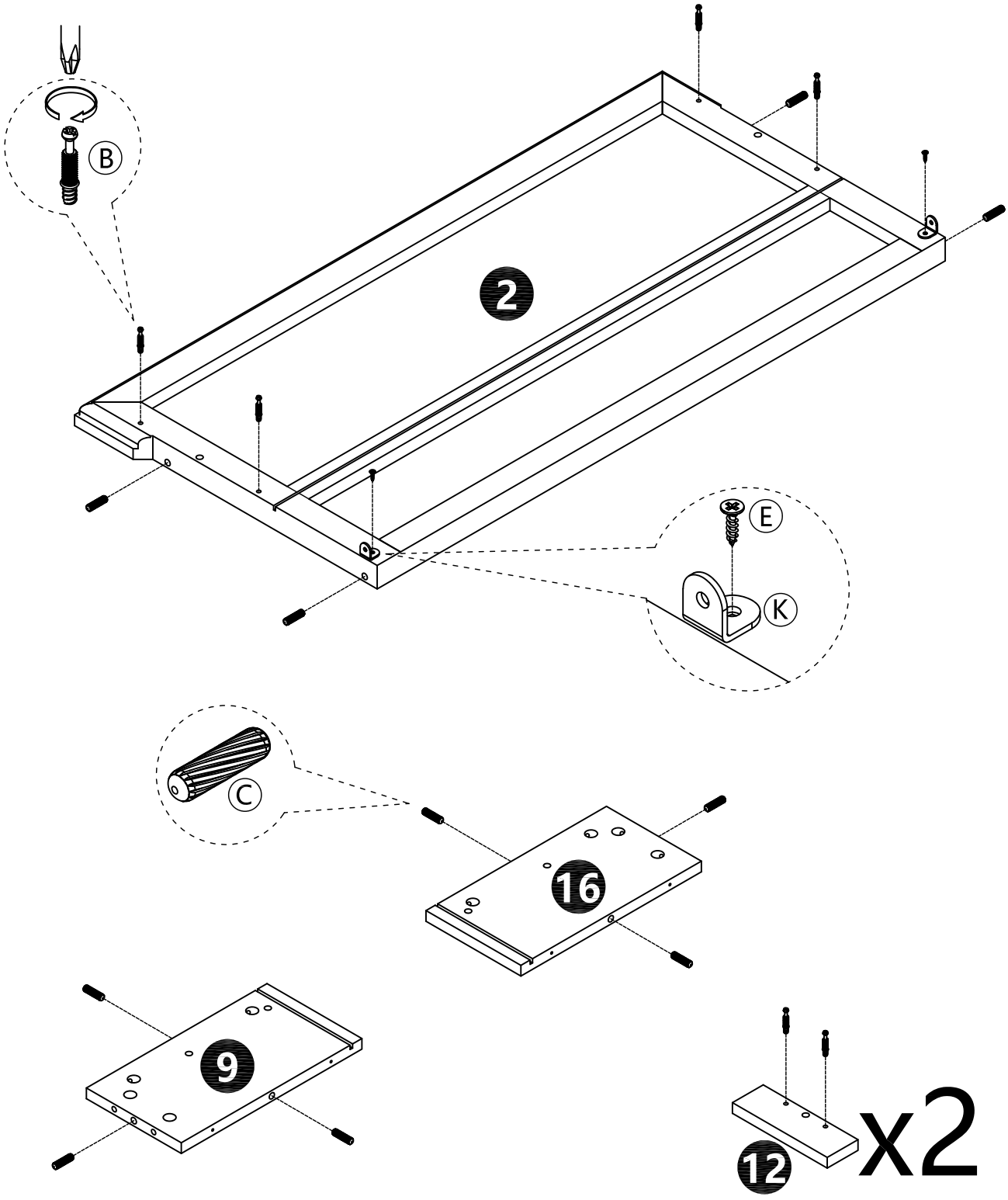

18

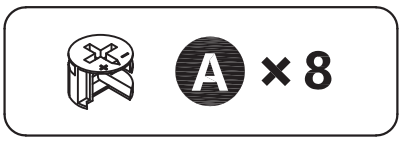

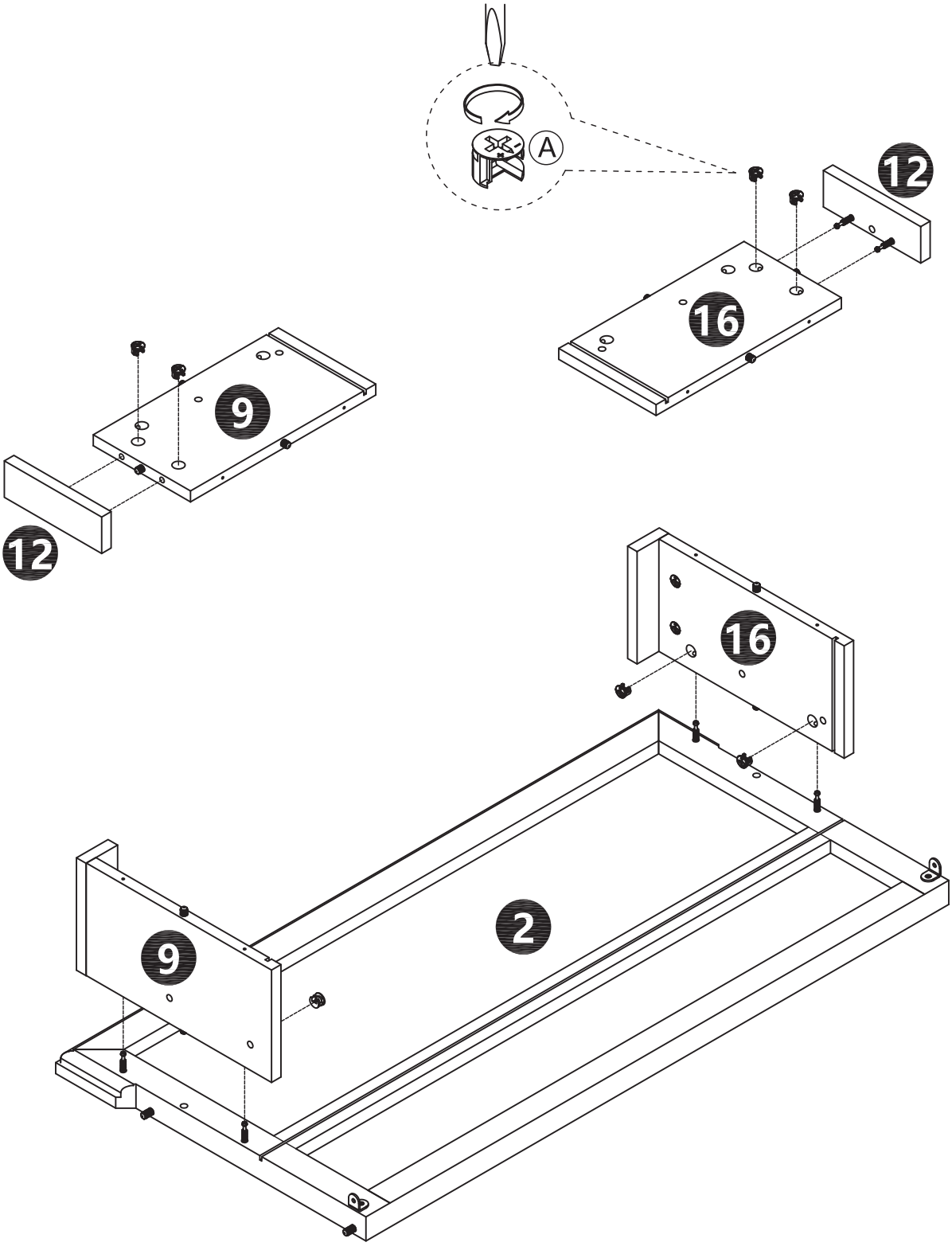

19

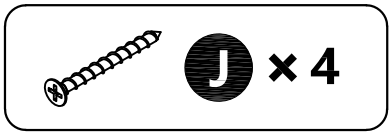

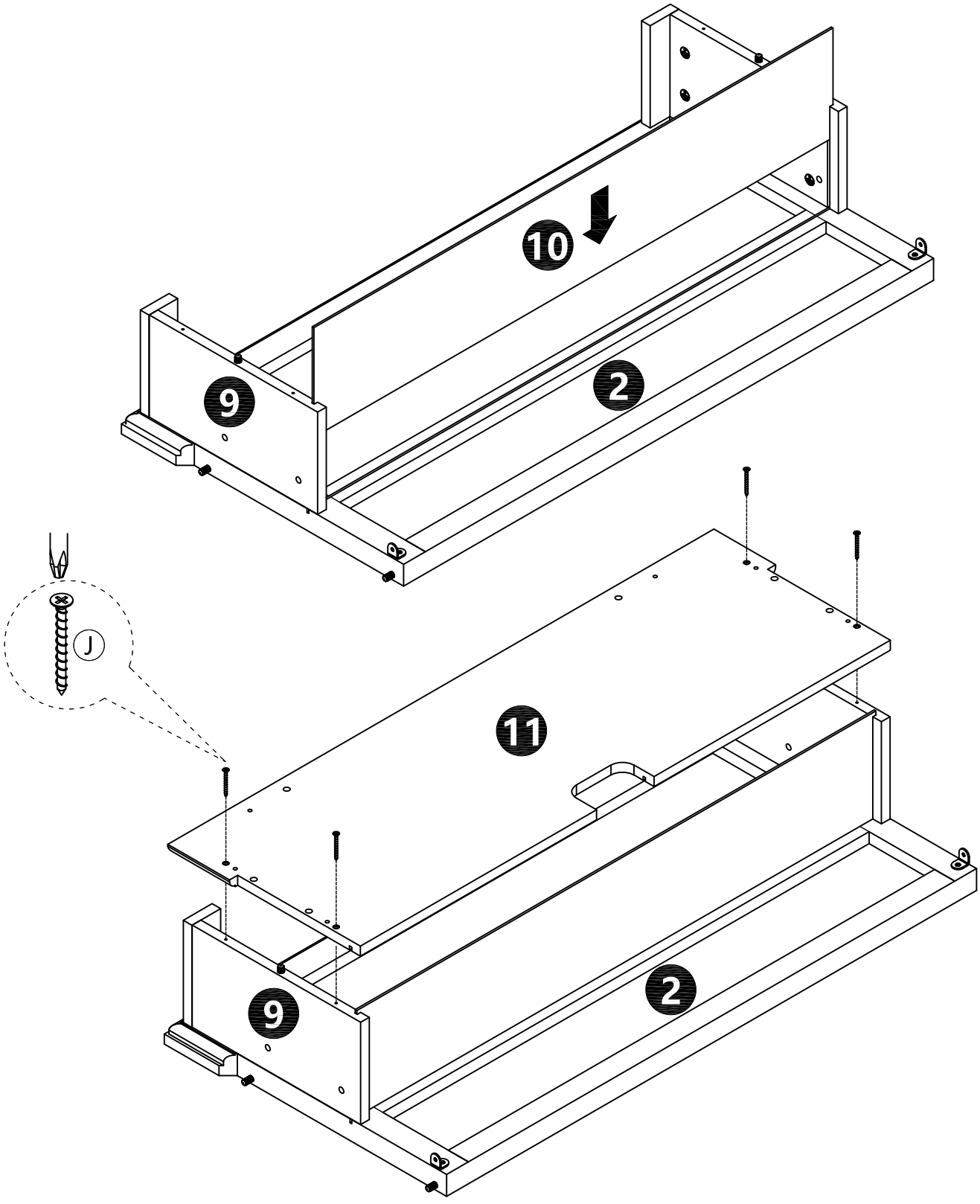

20

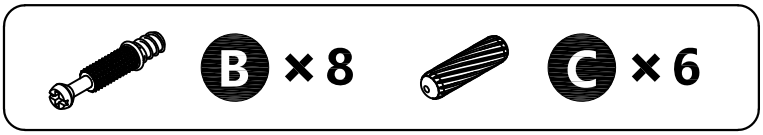

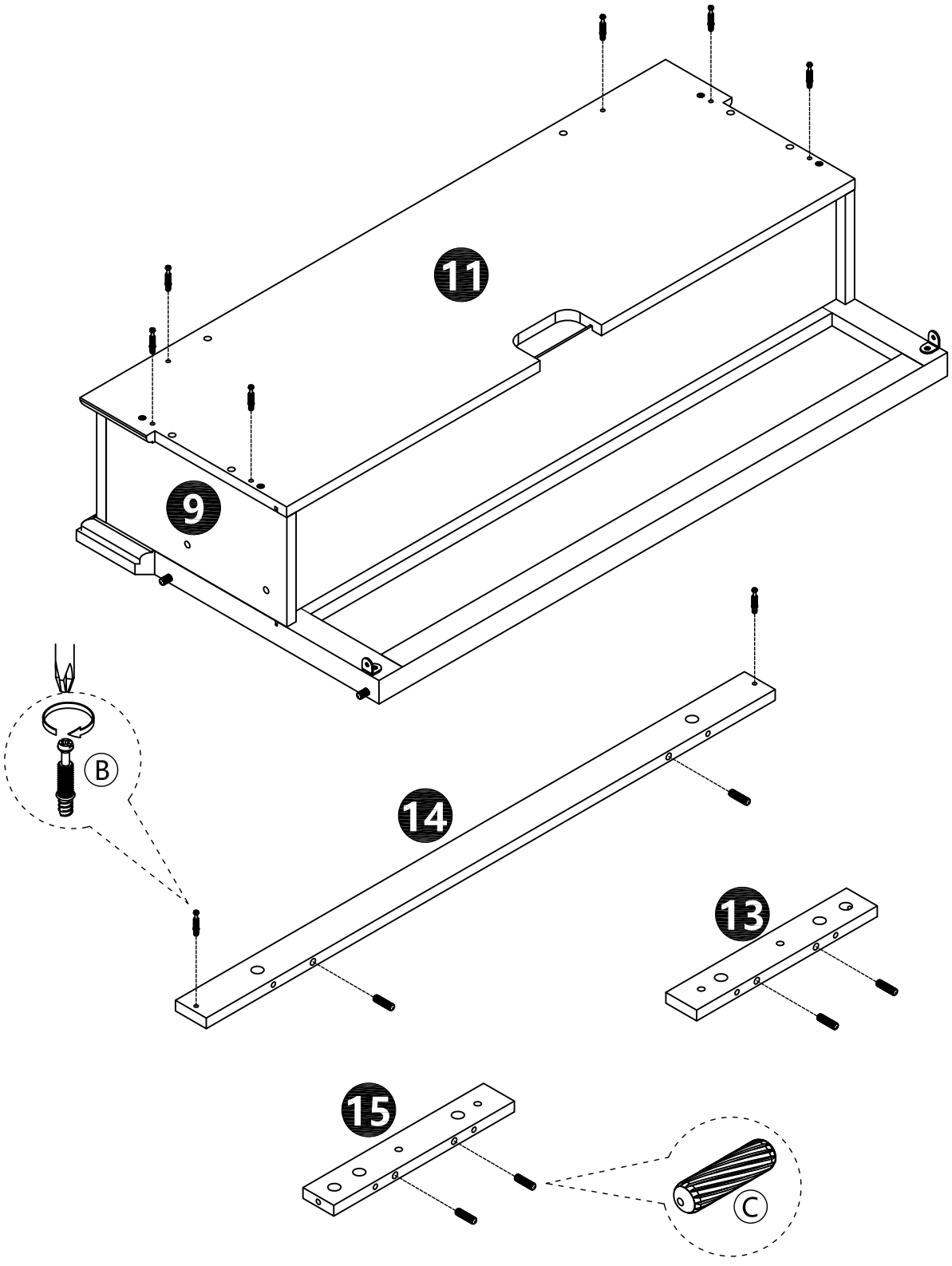

21

A × 8

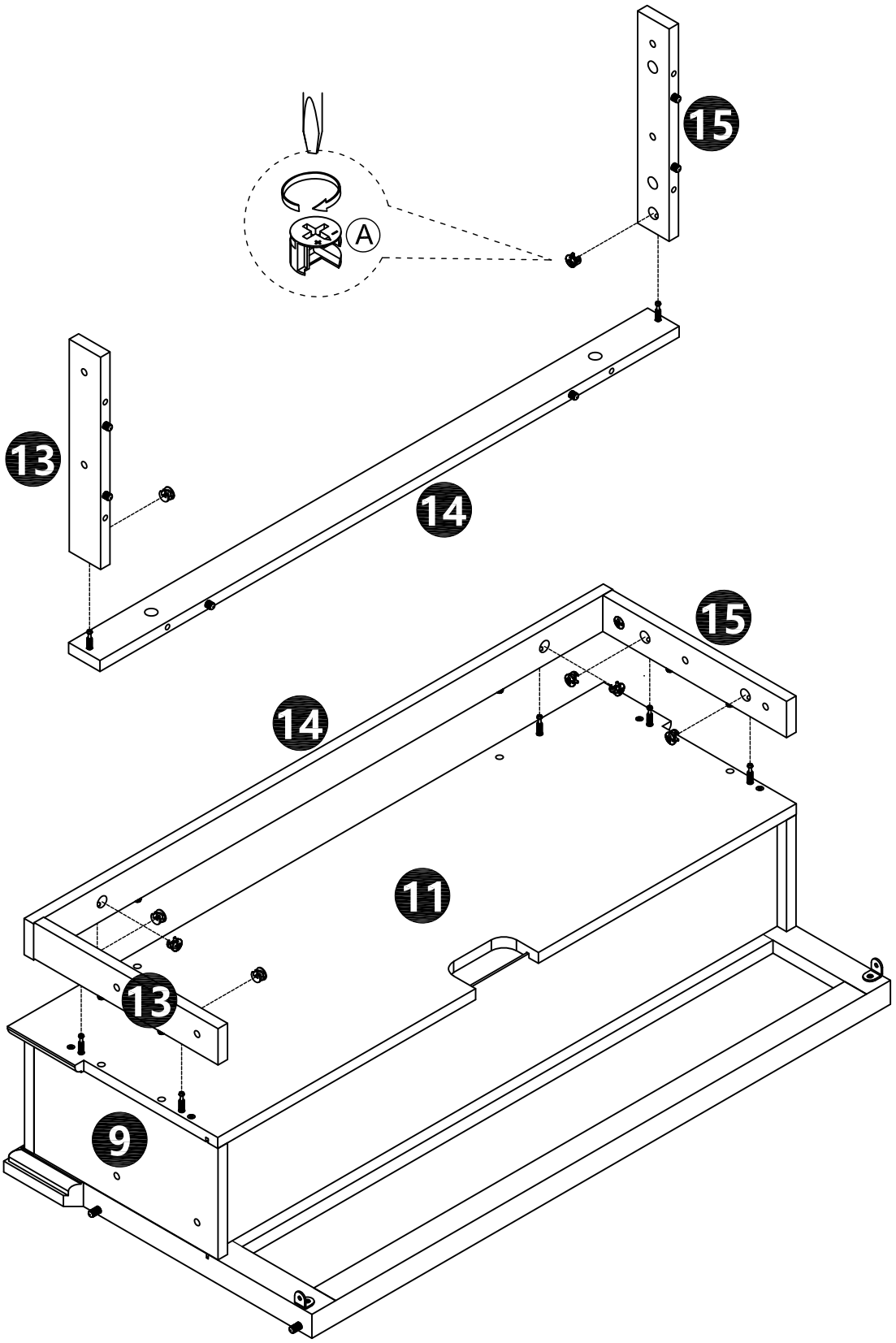

22

 B ×14  C ×16

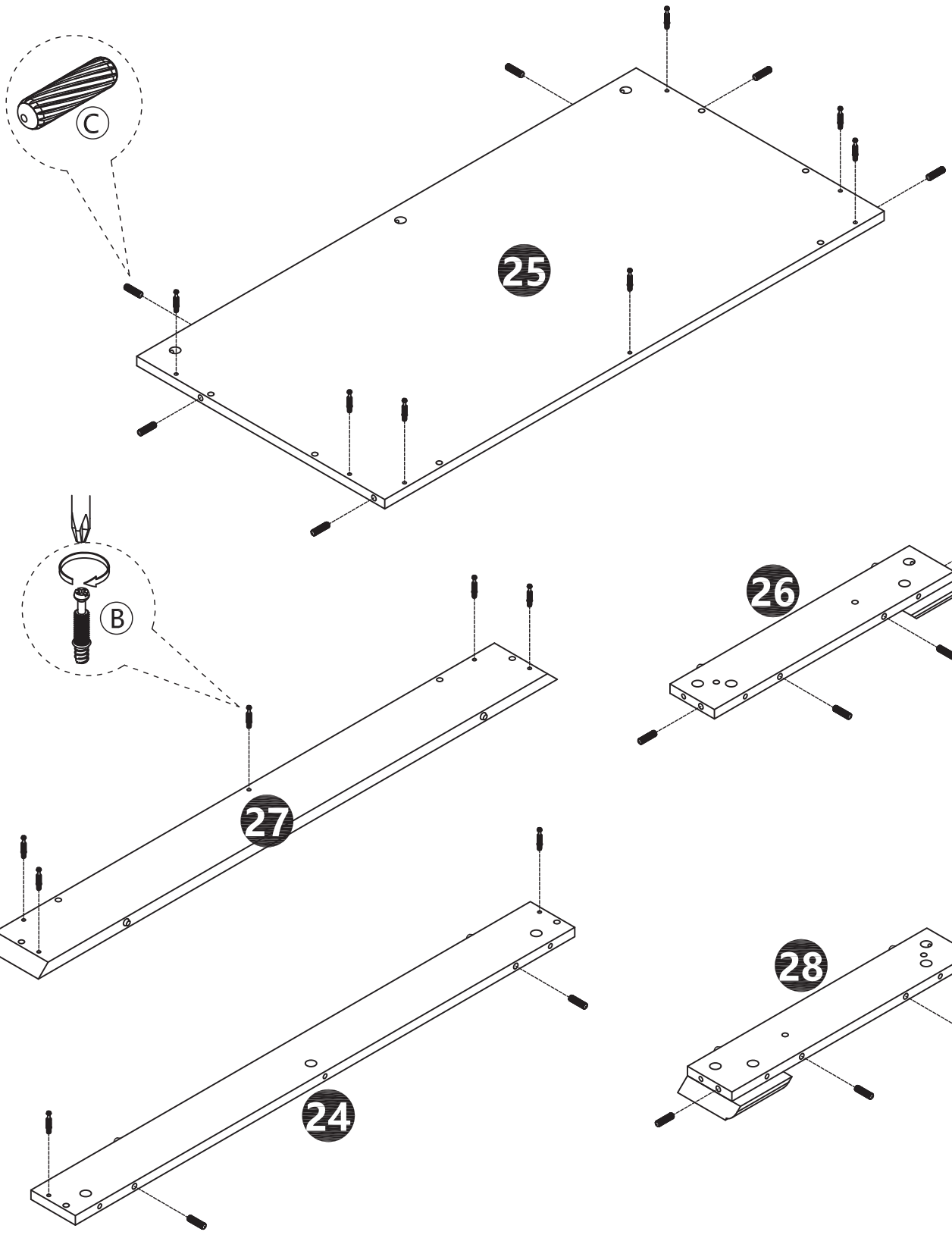

23

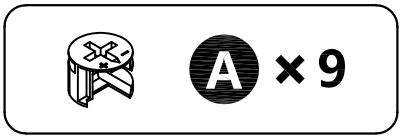

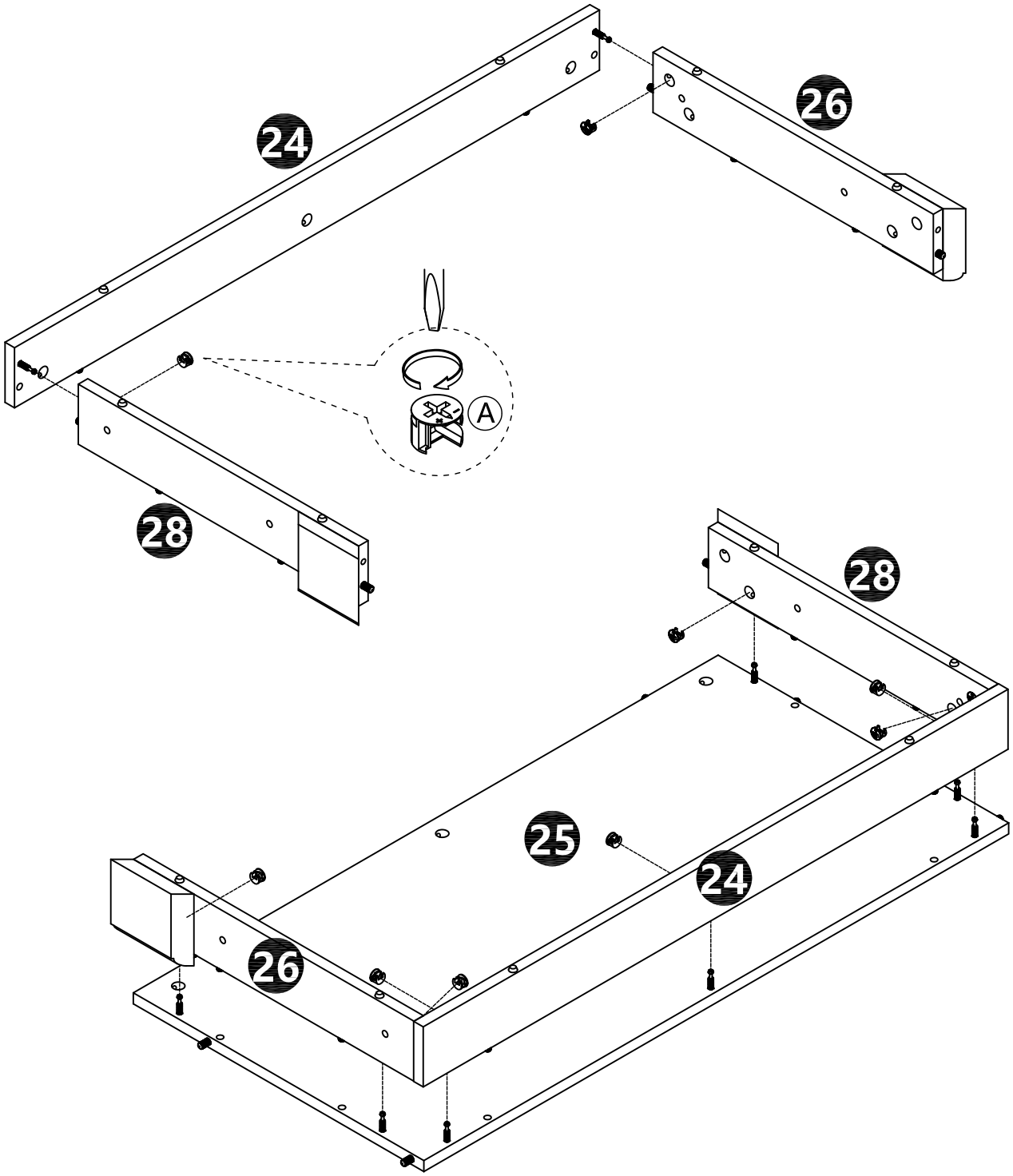

24

 A × 5  G × 6 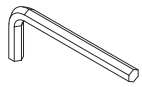 P × 1

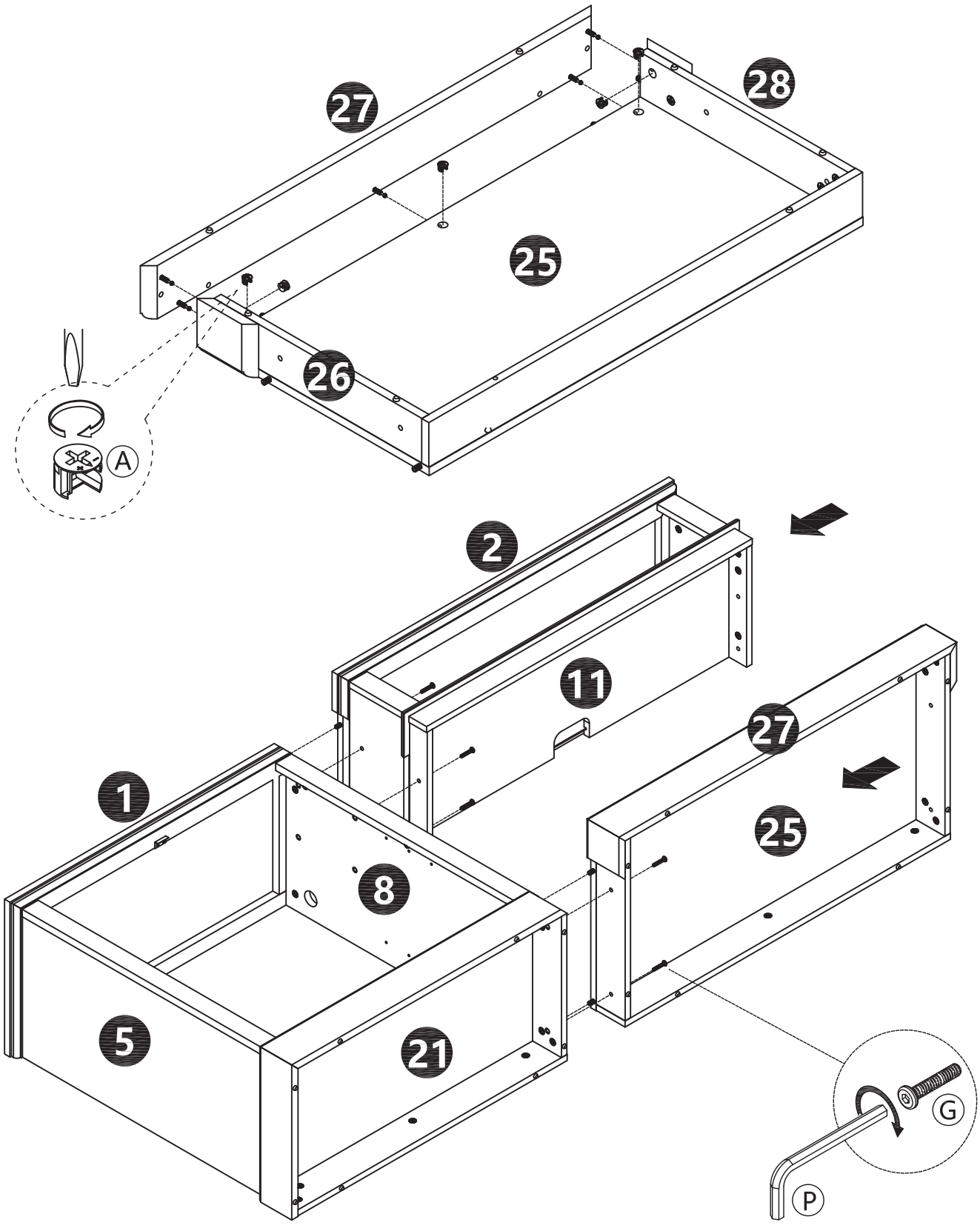

25

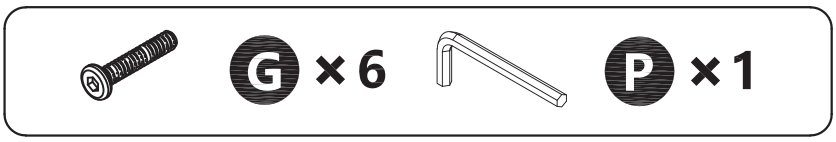

After tightening the screws, the two people stood the cabinet upright.

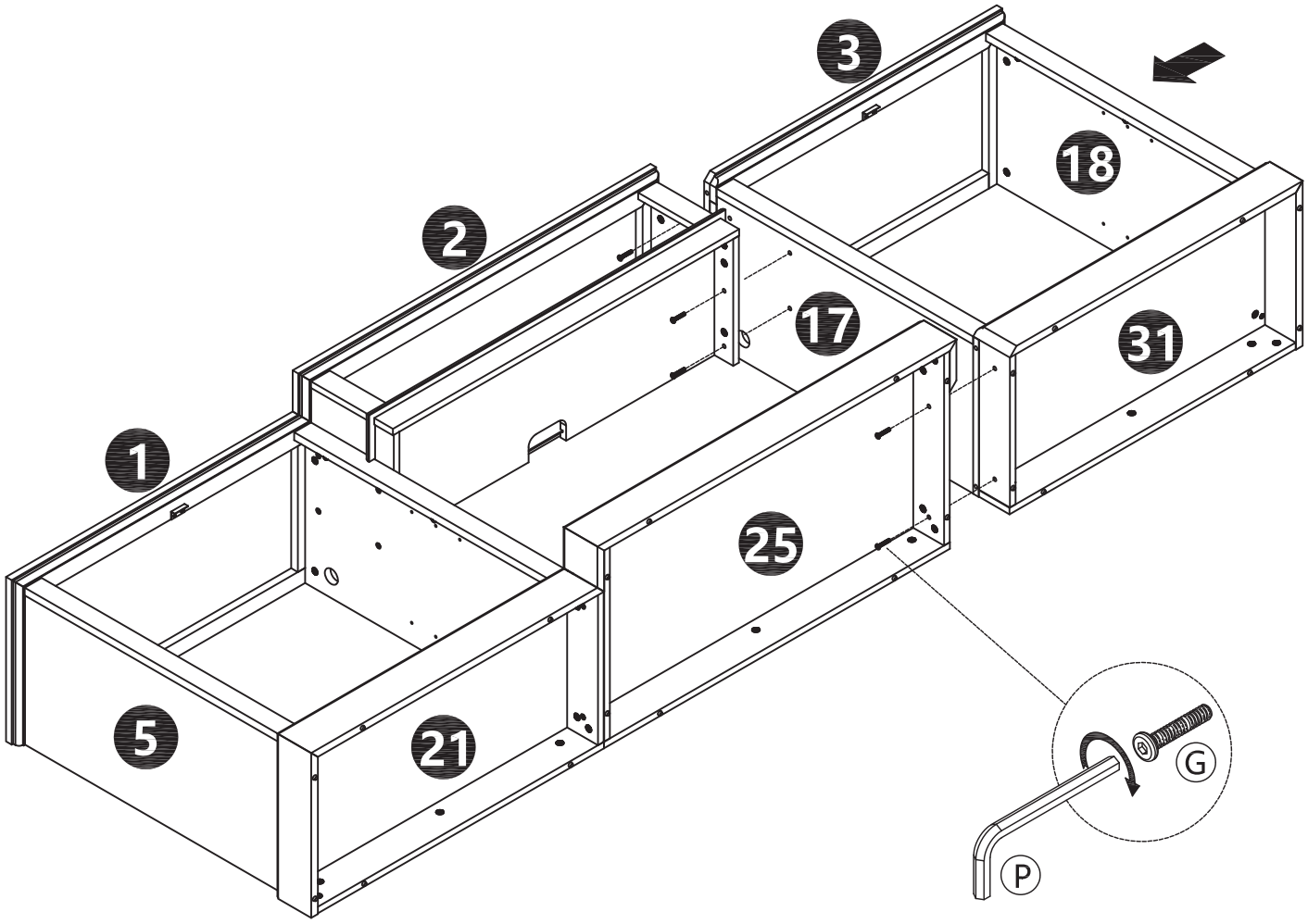

26

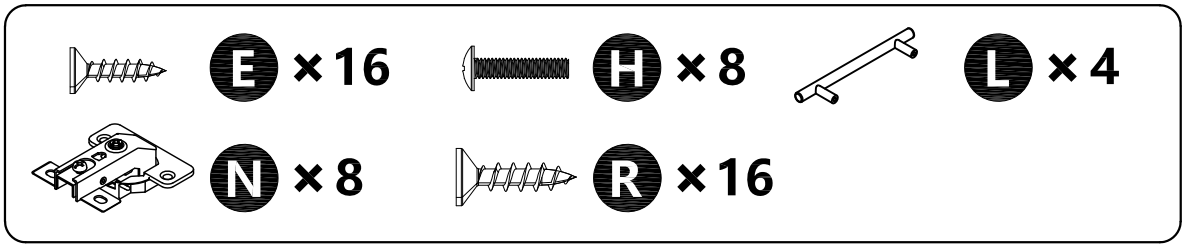

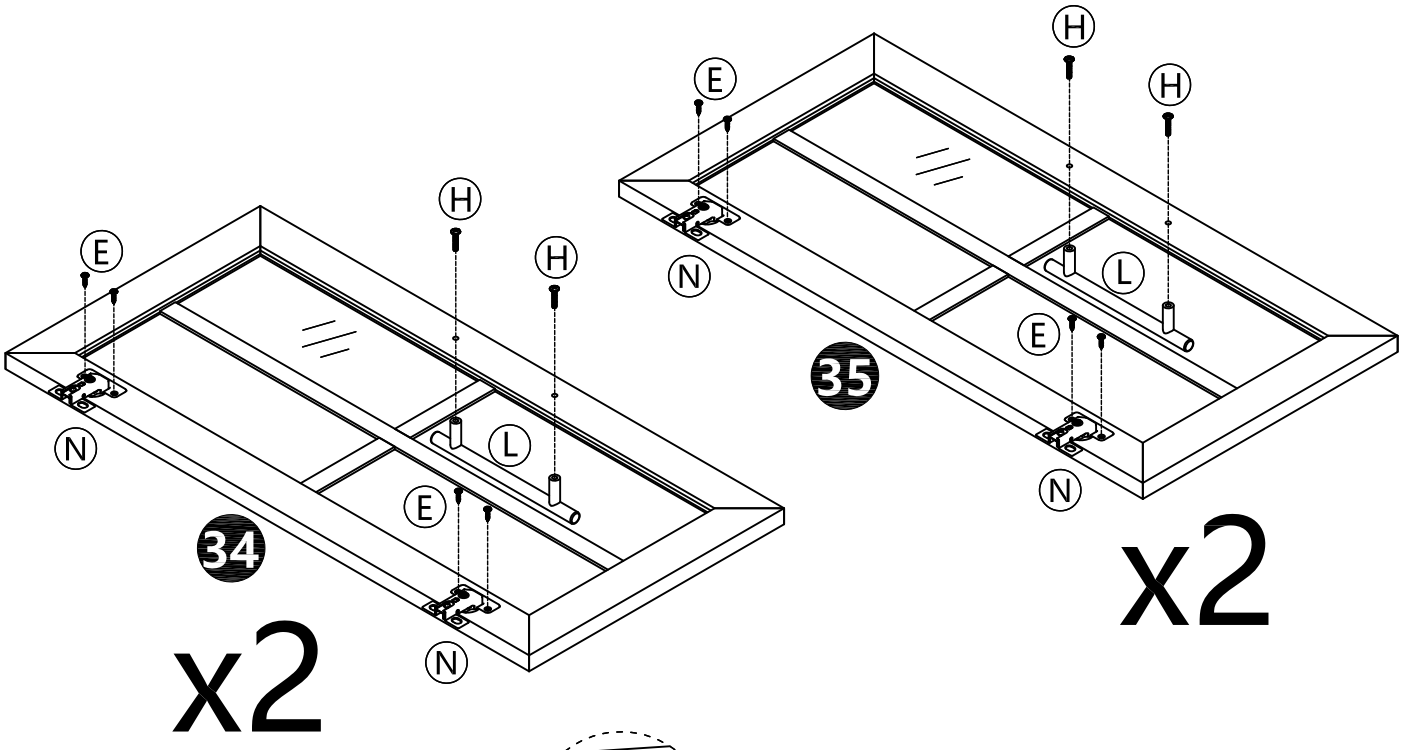

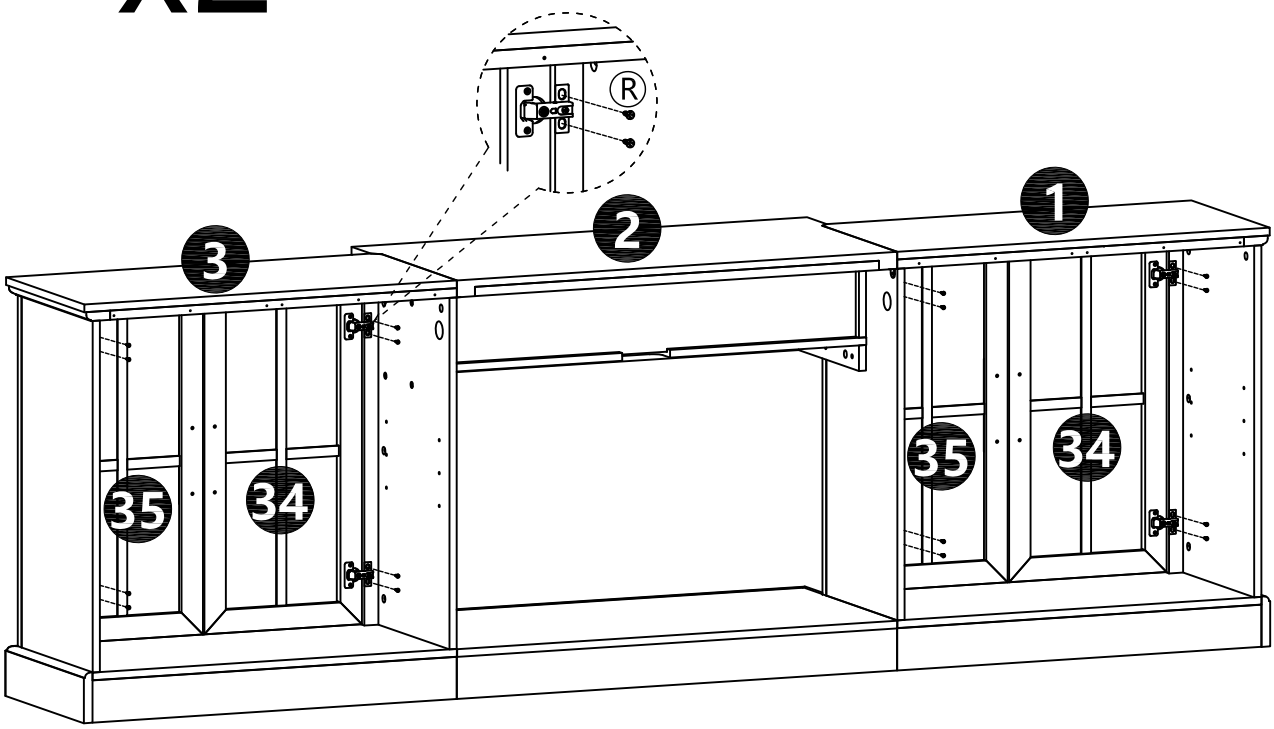

After installing the cabinet doors and adjusting the gaps between them to ensure they are even, proceed to the next step of installation.

27

When the door of the cabinet is too high or too low

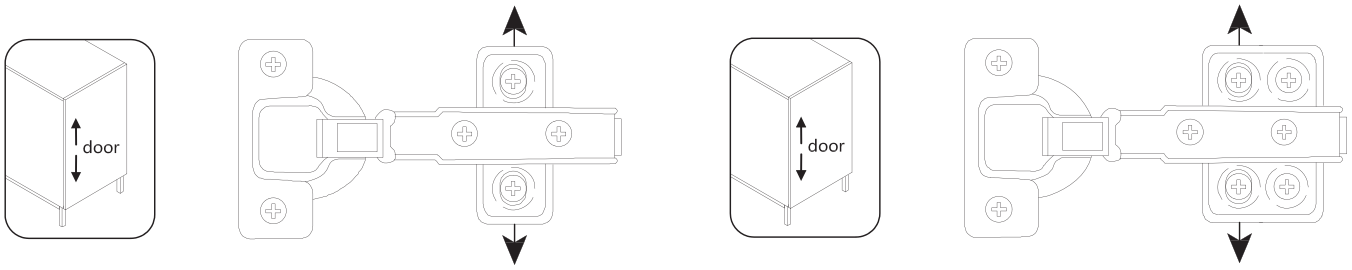

Loosen the height screws, then move the door up or down to make it level and then tighten the screws.

When the four sides of the cabinet door are not flush with the cabinet.

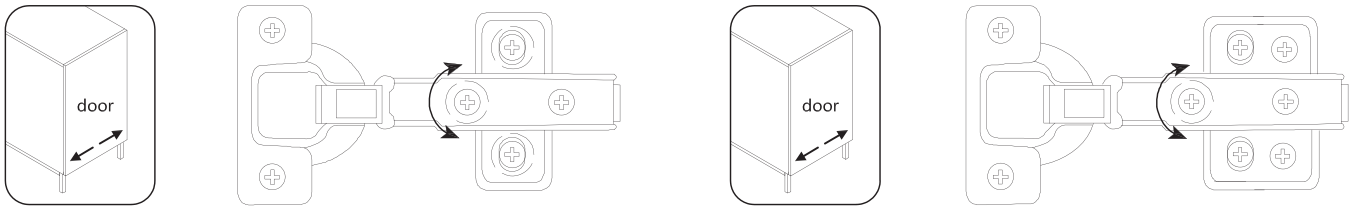

Adjust the lateral screws. Rotate the screws clockwise to increase the gap of the hinge, and rotate the screws counterclockwise to reduce the gap of the hinge until the four sides of the cabinet door are flush with the cabinet body.

When the gap between the position of the cabinet door hinge and the cabinet is either too large or too small.

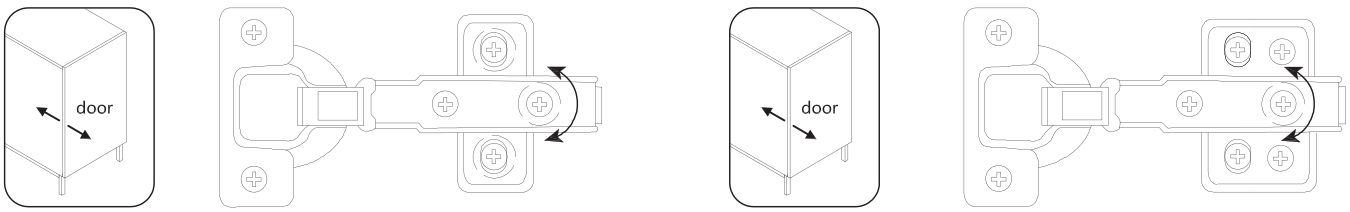

Loosen the in-and-out screws, adjust the gap between the door and the cabinet to make it even, and then tighten the screws.

28

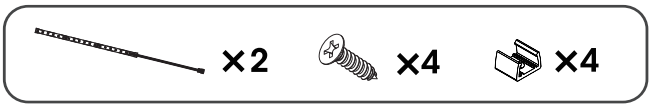

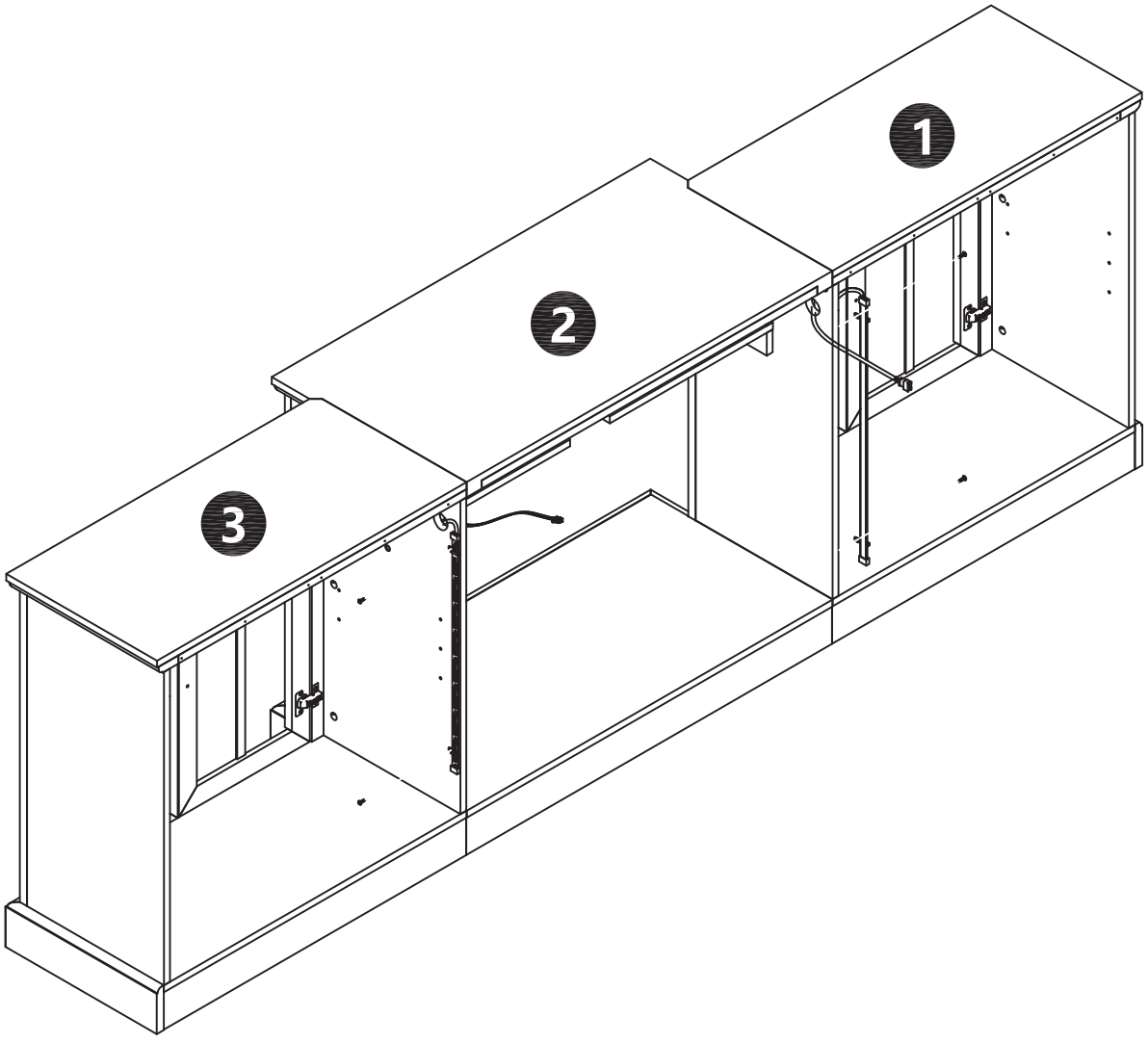

29

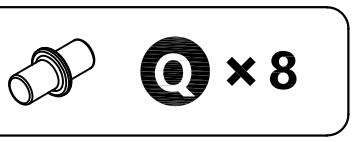

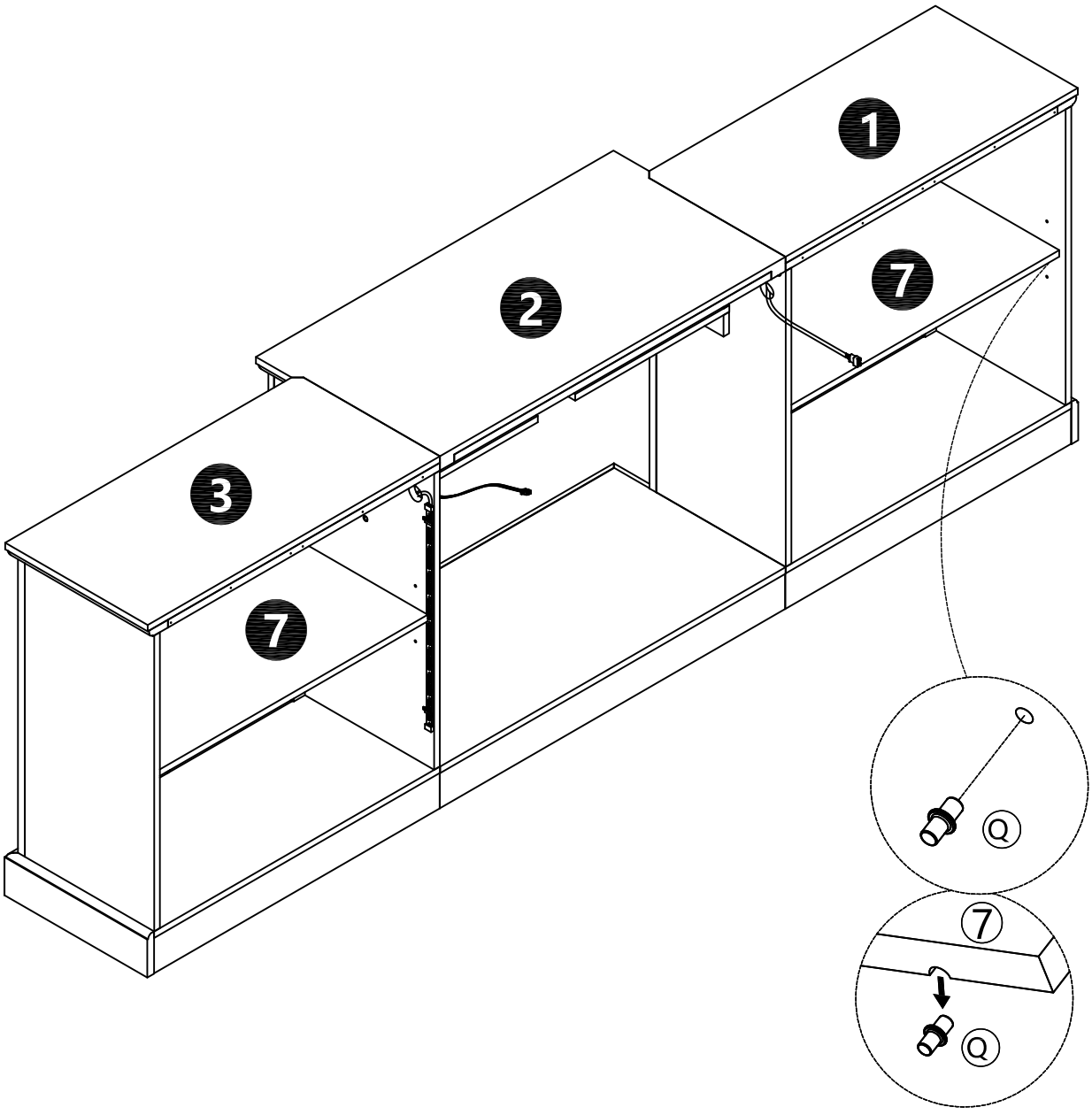

30

E ×2 F ×36

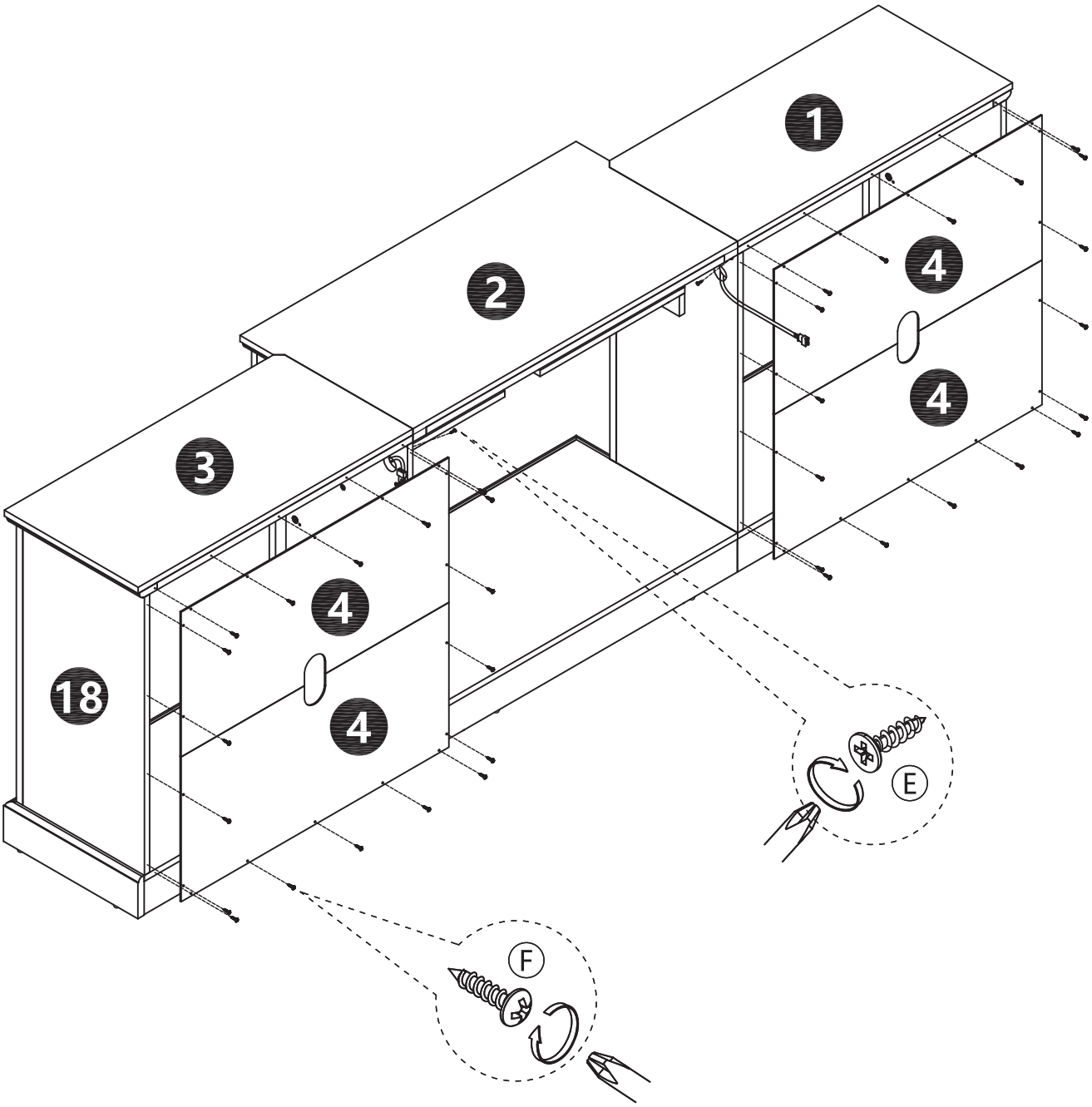

31

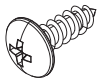 ×4 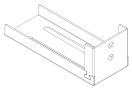 ×2  ×1

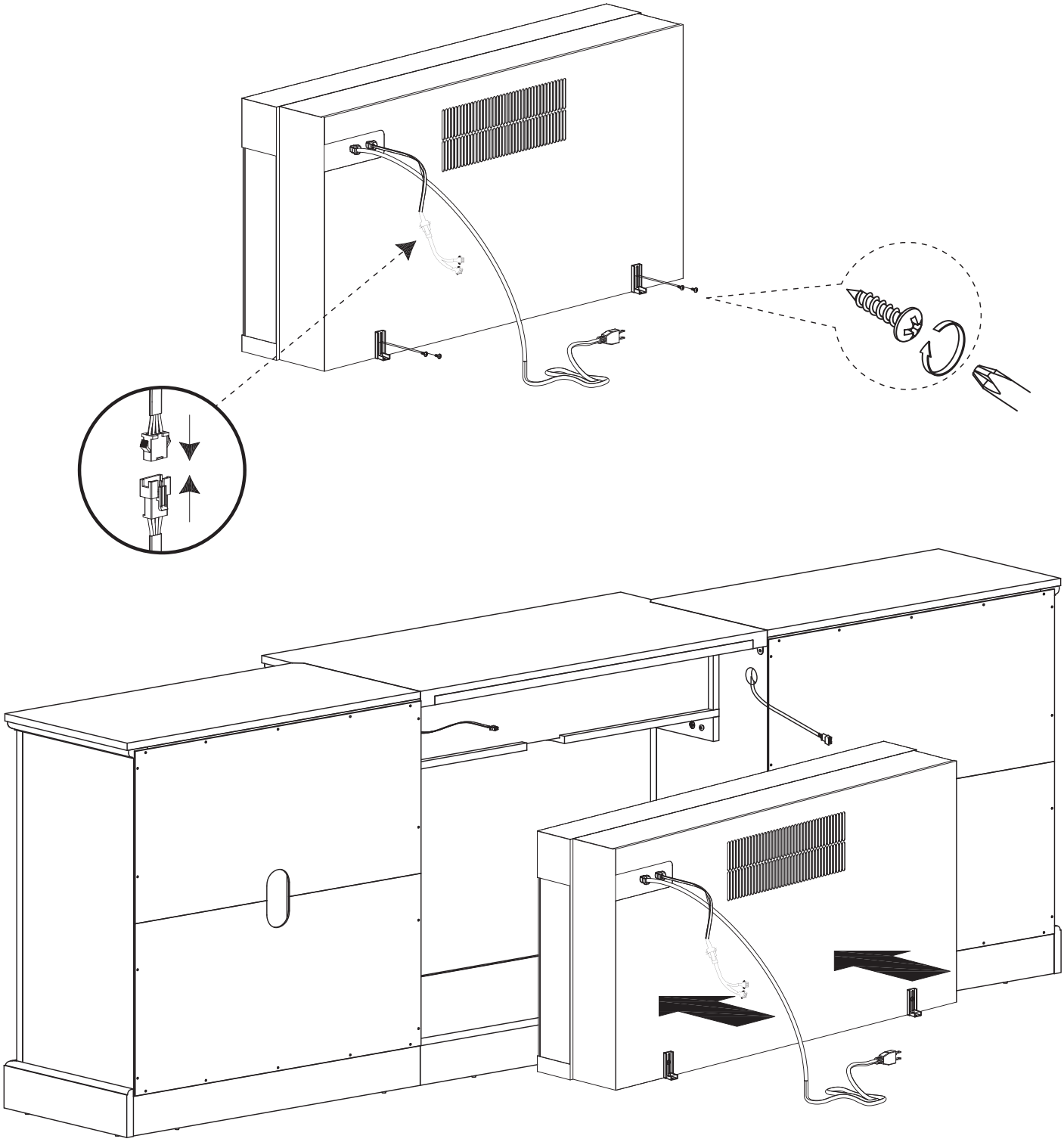

32

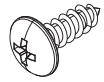

× 2

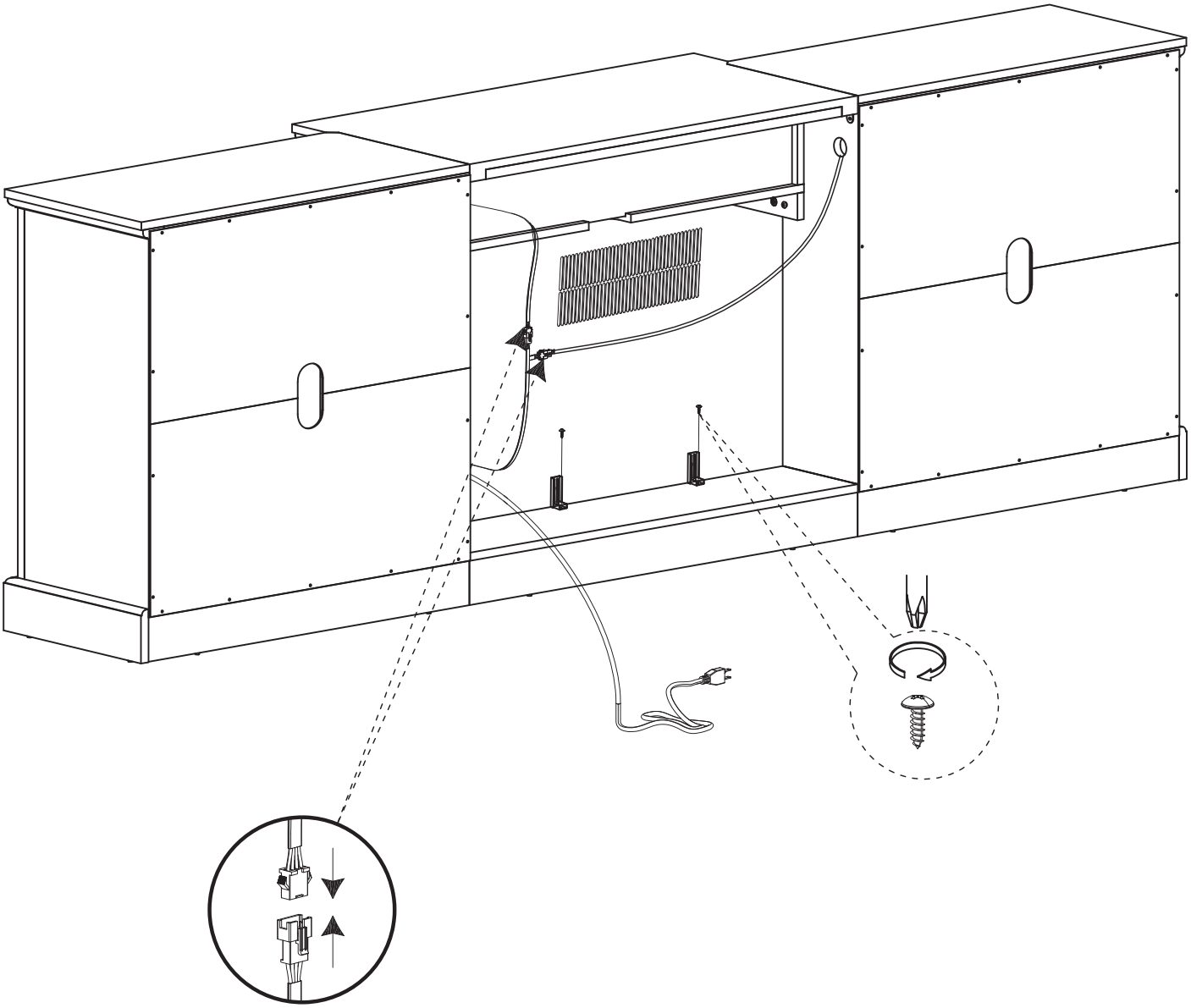

33

Don’ push or pull.
Two people lift when you move.

