ASSEMBLY INSTRUCTION

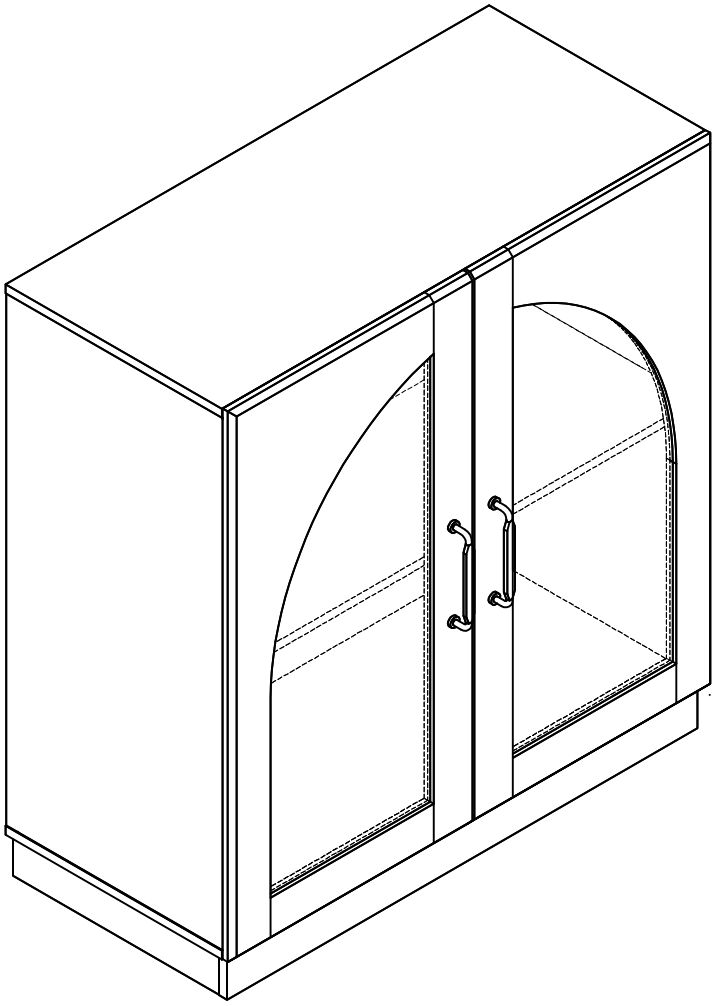

Before You Start

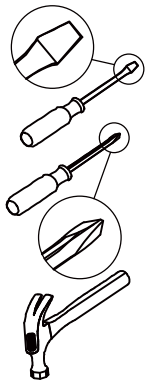

- Read through each step carefully and follow the proper order
- Separate and count all your parts and hardware, If Parts are missing defective or having wrong parts in package,or Board Surface is broken,scratched or lack of some screw holes.You can contact us and we will get back to you within 24 hours. Or, you can reach us via after-sales email.
- Give yourself enough room for the assembly process
- Caution: If using a power drill or power screwdriver for screwing, please pay attention to slow down and stop when screw is tight. Failure to do so may result in stripping the screw. （Assembly speed can be increased by using electric screwdriver）

Helpful Hints

PEOPLE NEEDED FOR ASSEMBLY: **2**

- Open your item in the area you plan to keep it to avoid excessive heavy lifting.



- Identify, sort and count the parts before attempting assembly.
- Do not make the screws too loose or too tight.



- The accessory bag contains some small accessories,which should be kept away from children.



- The remaining parts are spare parts.
- Do NOT use harsh chemicals or abrasive cleaners on this item. And Never push, pull, or drag your furniture.

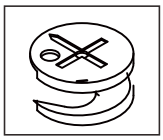

- Young children can be seriously injured by tipping furniture. You must install the tipping restraint hardware with the unit (No. J) to prevent the unit from tipping, causing any accidents or damage. the tipping restraints are intended only as a deterrent, they are not a substitute for proper adult supervision.



This Is A Challenge For You !

Putting furniture together can feel tricky at first,
but why not give it a shot?
Once you’ re done, you’ ll see it’ s not as hard as it looks
—and your family or friends might even be impressed!

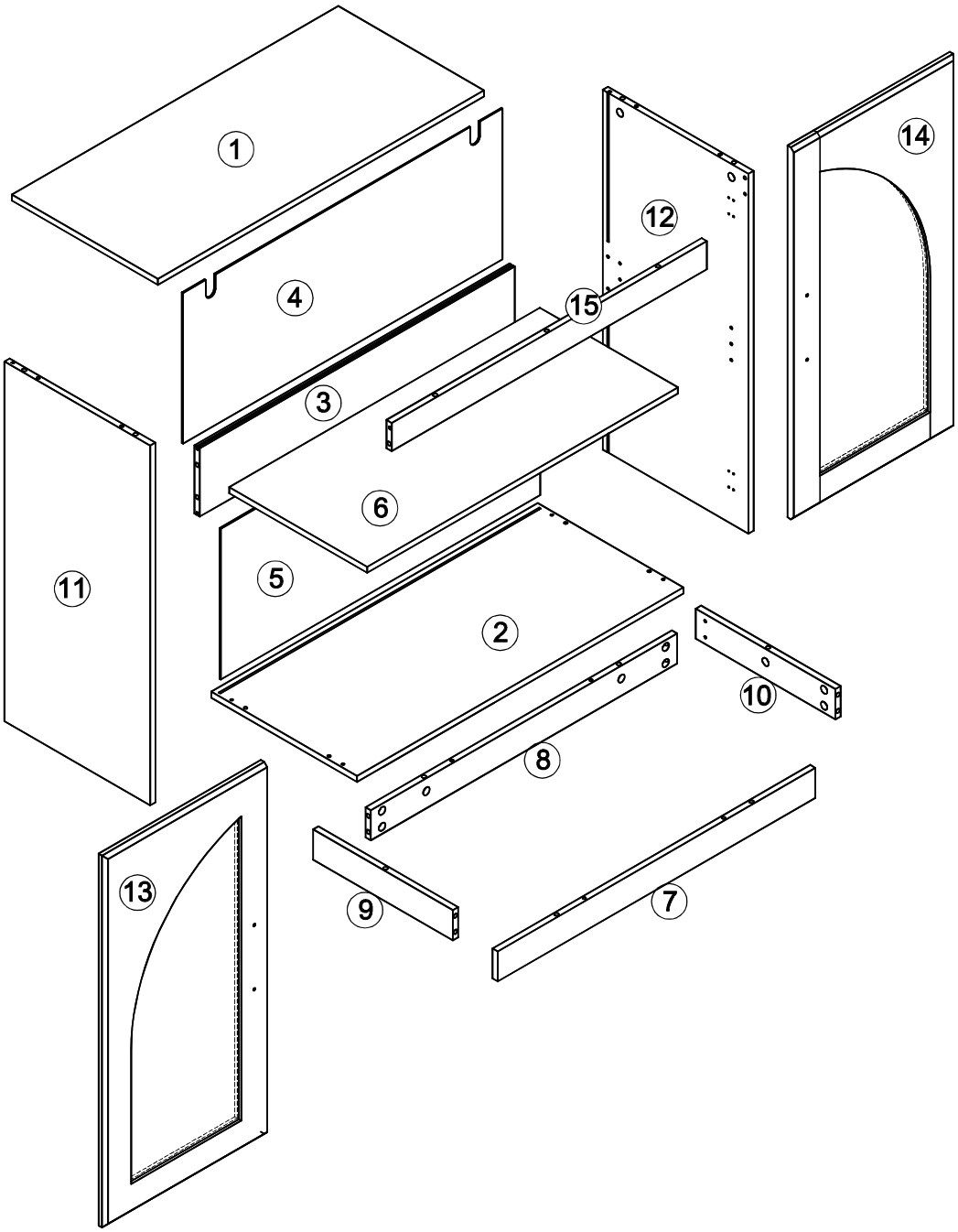

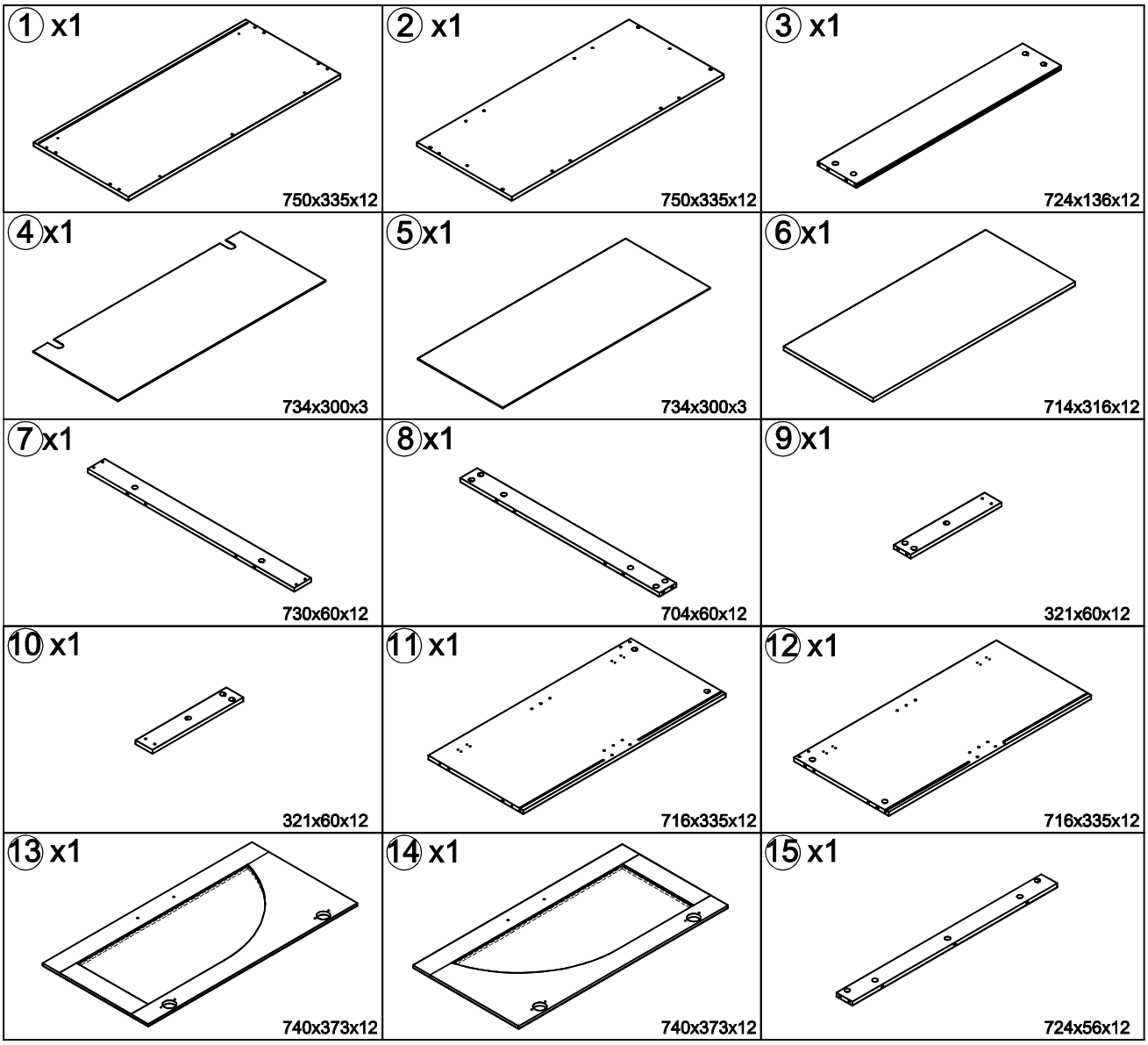
① x1
750x335x12
② x1
750x335x12
③ x1
724x136x12
④ x1
734x300x3
⑤ x1
734x300x3
⑥ x1
714x316x12
⑦ x1
730x60x12
⑧ x1
704x60x12
⑨ x1
321x60x12
⑩ x1
321x60x12
⑪ x1
716x335x12
⑫ x1
716x335x12
⑬ x1
740x373x12
⑭ x1
740x373x12
⑮ x1
724x56x12

Hardware

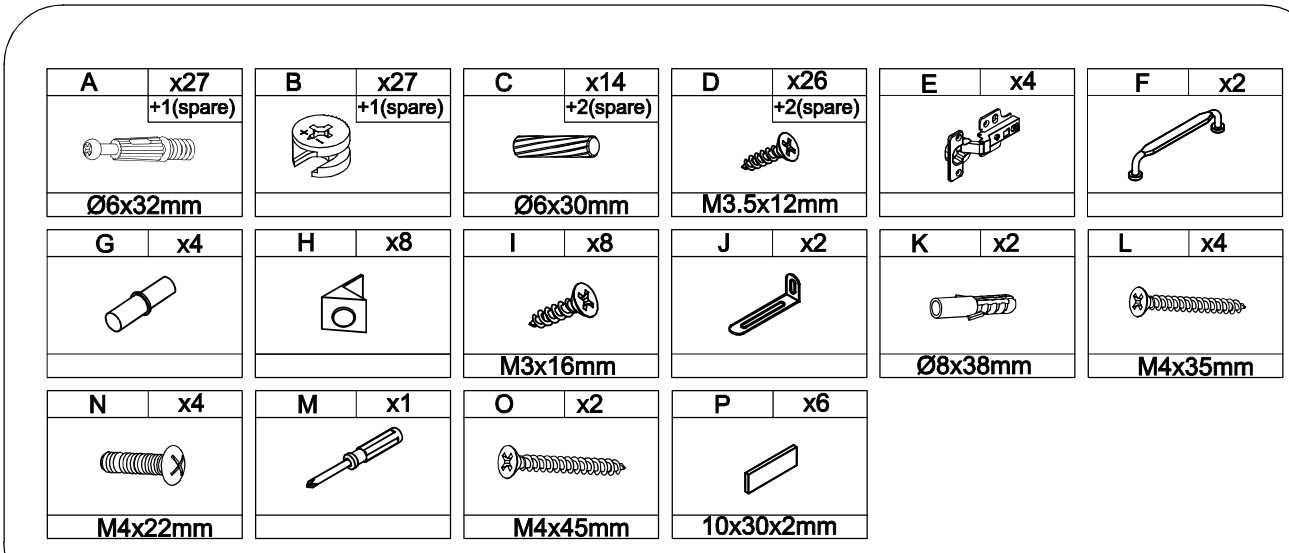
A x27 +1(spare) Ø6x32mm
B x27 +1(spare)
C x14 +2(spare) Ø6x30mm
D x26 +2(spare) M3.5x12mm
E x4
F x2
G x4
H x8
I x8 M3x16mm
J x2
K x2 Ø8x38mm
L x4 M4x35mm
N x4 M4x22mm
M x1
O x2 M4x45mm
P x6 10x30x2mm

How the knock down assembly system works

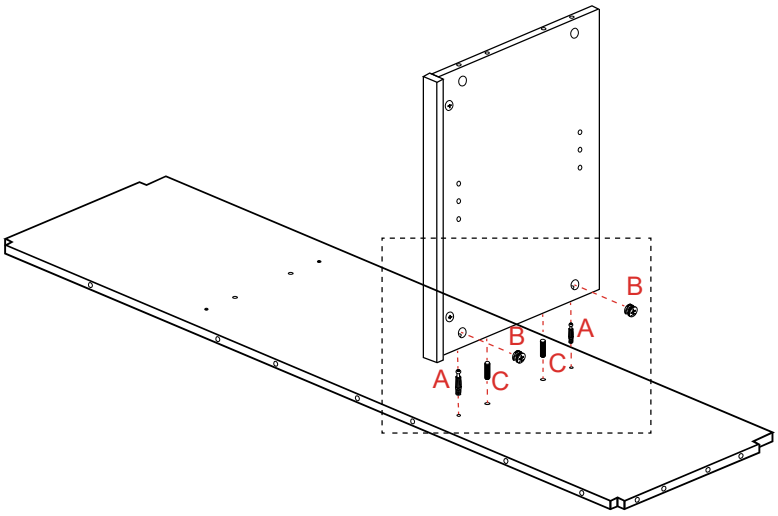

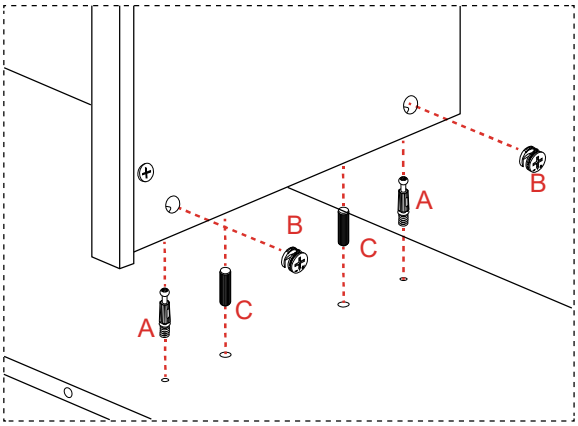

How to Install Wood Dowel

Insert the wood dowel [C] at least half wat by tapping lightly with a rubber mallet,IF NECESSARY.

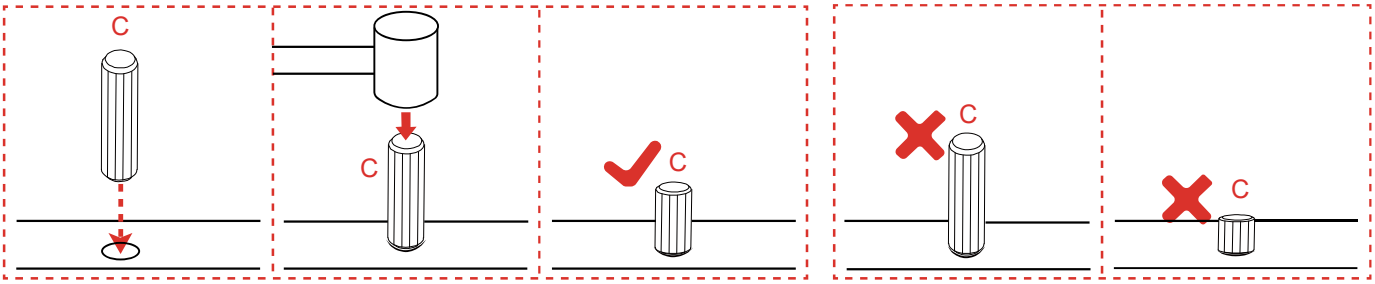

CAM LOCK SYSTEM OPERATION

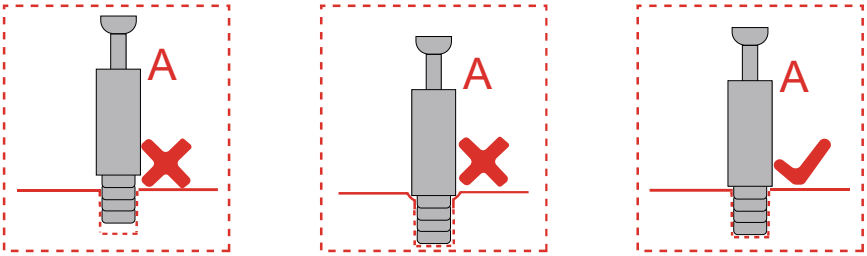

1.Screw the cam bolt [A] into the threaded insert on the panel.
2.Connect both panels together making sure cam bolt[A] goes into the pre-drilled large gole on the end of panel for cam lock[B].
3.Insert the cam lock[B] into the pro-drilled large hole on the panel.Make sure the cross slot of cam lock [B] faces out(The arrow should point towards Screw No. A).
4.Rotate the cam lock [B] clockwise with a self-supplied phillips screwdriver to lock the cam bolt [A] in place(Rotate 100-180 degrees until tight).

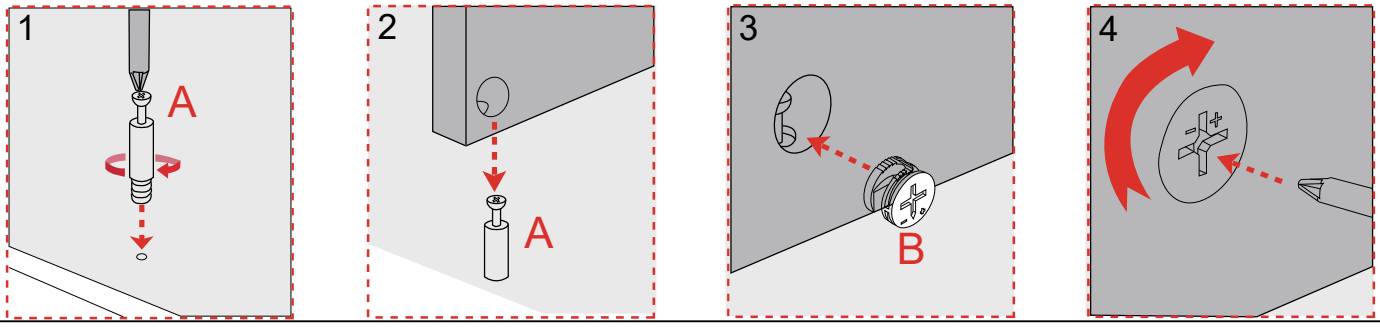

STEP1

Install 6Pcs No. A screws into the corresponding holes on Panels No. 11 and No. 12.

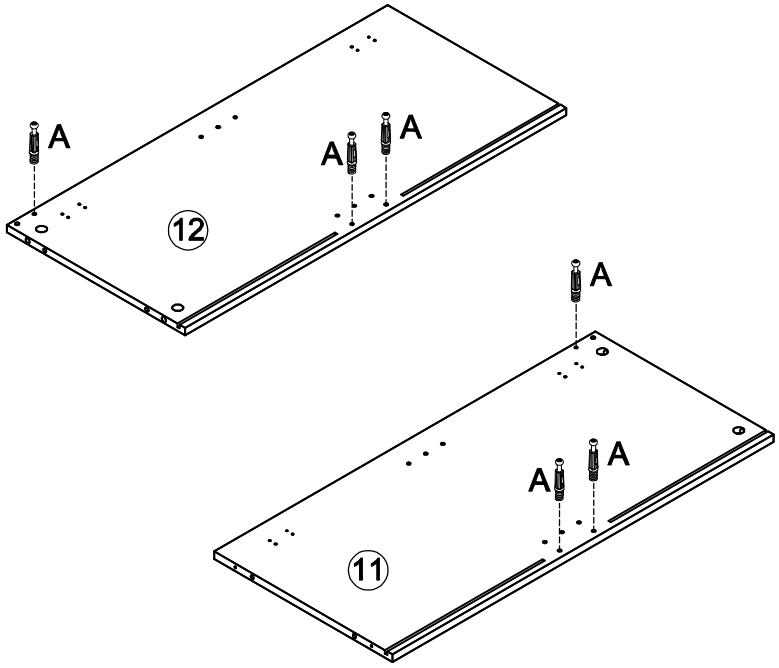

A	x6
	
Ø6x32mm	

STEP2

First, insert 2Pcs No. C wooden dowels into the holes on both sides of Panel No. 15, then use 6Pcs No. B screws to connect Panels No. 3, No. 11, No. 12, and No. 15 together. If you are unsure how to install the No. B screws, please refer to Page 6 of the instruction manual.

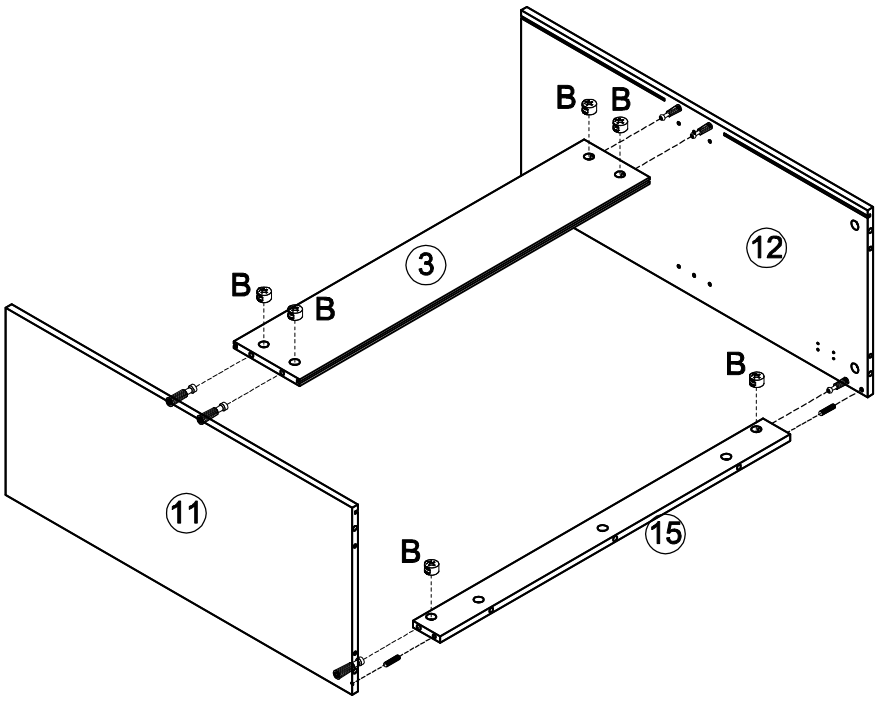

B	x6
	

C	x2
	
Ø6x30mm	

STEP3

Insert Panel No. 4 into the grooves of Panels No. 11 and No. 12.

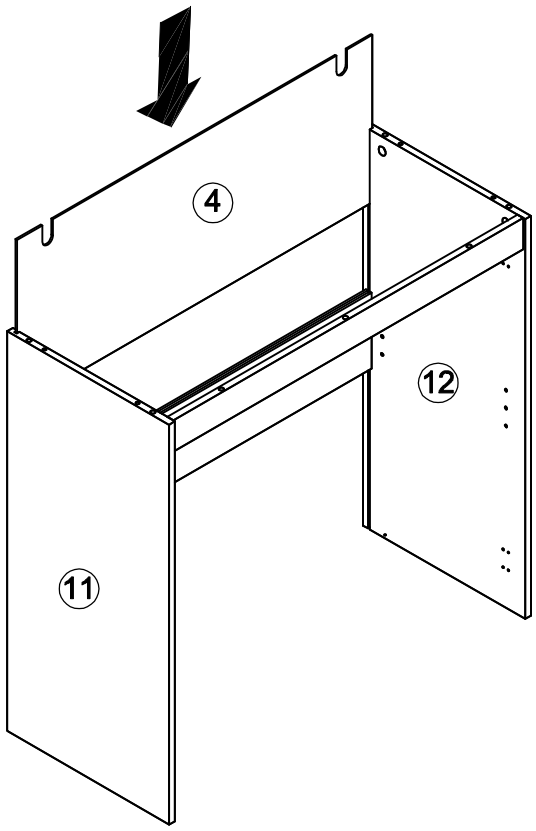

STEP4

First, install 7Pcs No. A screws into the corresponding holes on Panel No. 1, then use 2Pcs No. D screws to install the No. J anti-tip device onto Panel No. 1.

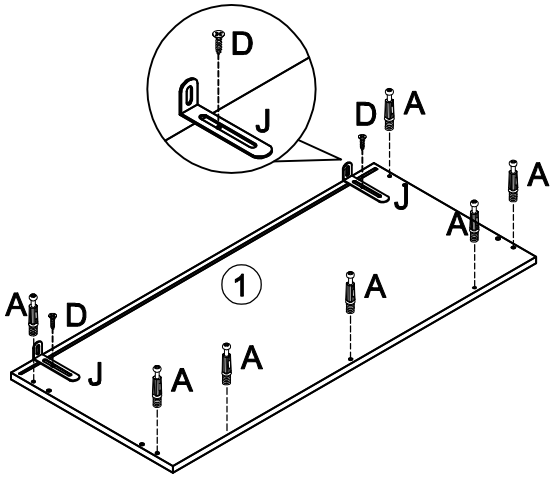

A	x7
	
Ø6x32mm	

D	x2
	
M3.5x12mm	

J	x2
	

STEP5

First, insert 4Pcs wooden dowels into the holes at the top of Panels No. 11 and No. 12, then use 7Pcs No. B screws to connect Panel No. 1 to the cabinet.

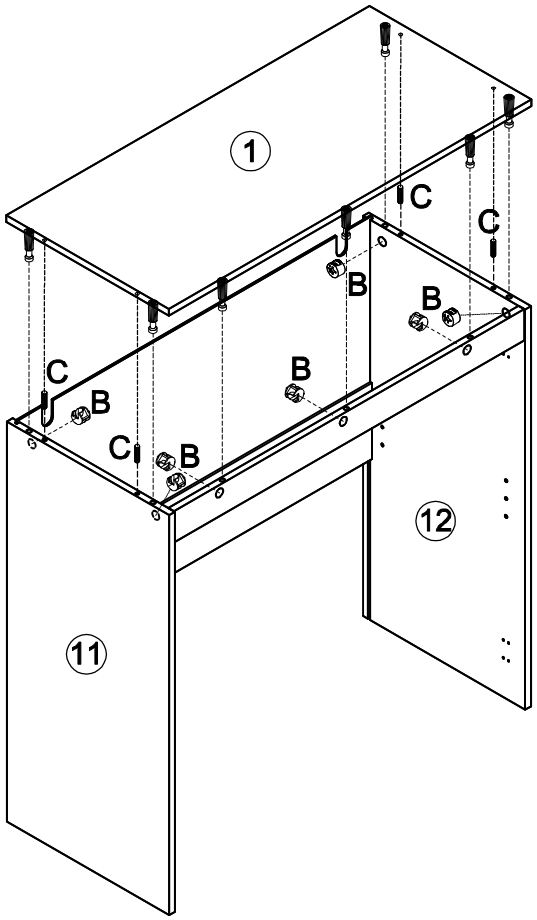

B	x7
	

C	x4
	
Ø6x30mm	

STEP6

Insert Panel No. 5 into the grooves of Panels No. 11 and No. 12. Next, insert 4Pcs No. G brackets into the holes on Panels No. 11 and No. 12 (you can choose the appropriate hole positions based on the height of the items).

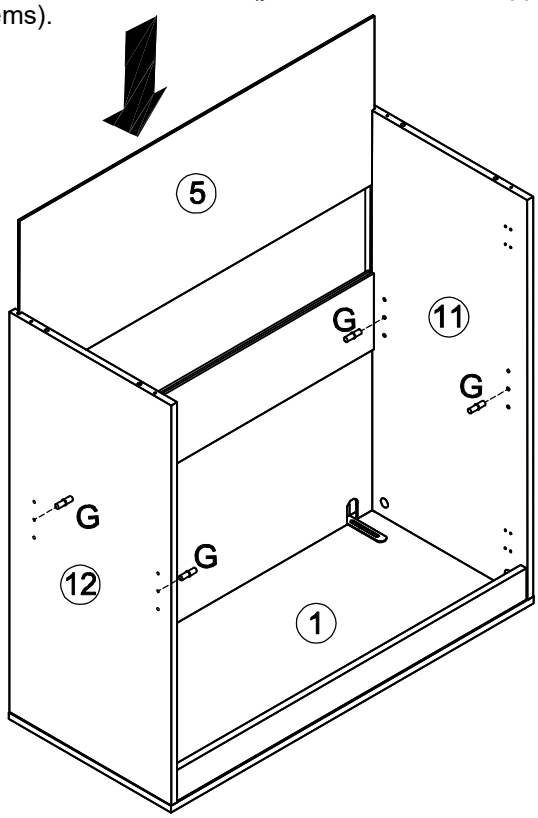

G	x4
	

STEP7

First, insert 4Pcs No. C wooden dowels into the holes at the top of Panels No. 11 and No. 12, then use 4Pcs No. L screws to connect Panel No. 2 to the cabinet.

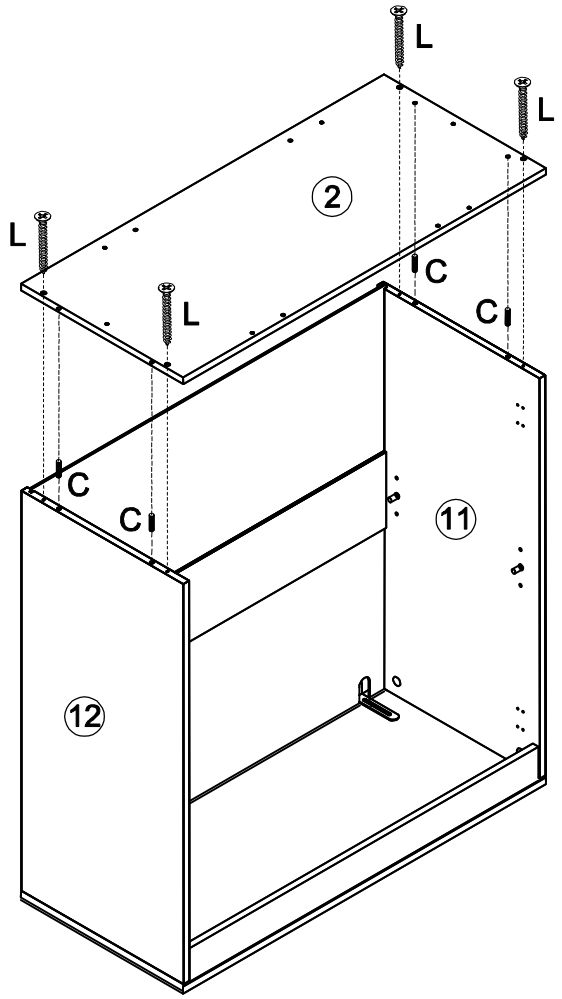

C	x4
	
Ø6x30mm	

L	x4
	
M4x35mm	

STEP8

Install 6Pcs No. A screws into the corresponding holes on Panel No. 2.

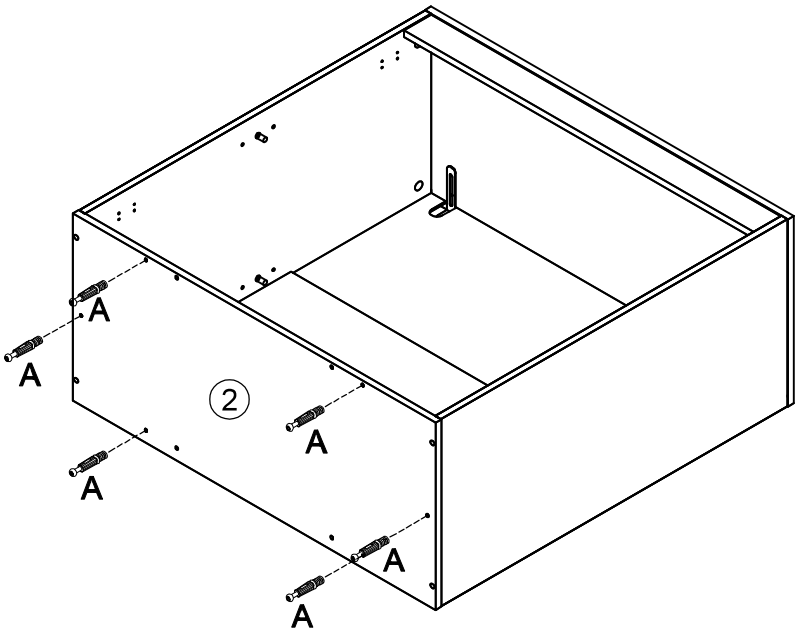

A	x6
	
Ø6x32mm	

STEP9

First, install 8Pcs No. A screws into the corresponding holes on Panels No. 7, No. 9, and No. 10, then use 4Pcs No. B screws to connect Panels No. 8, No. 9, and No. 10.

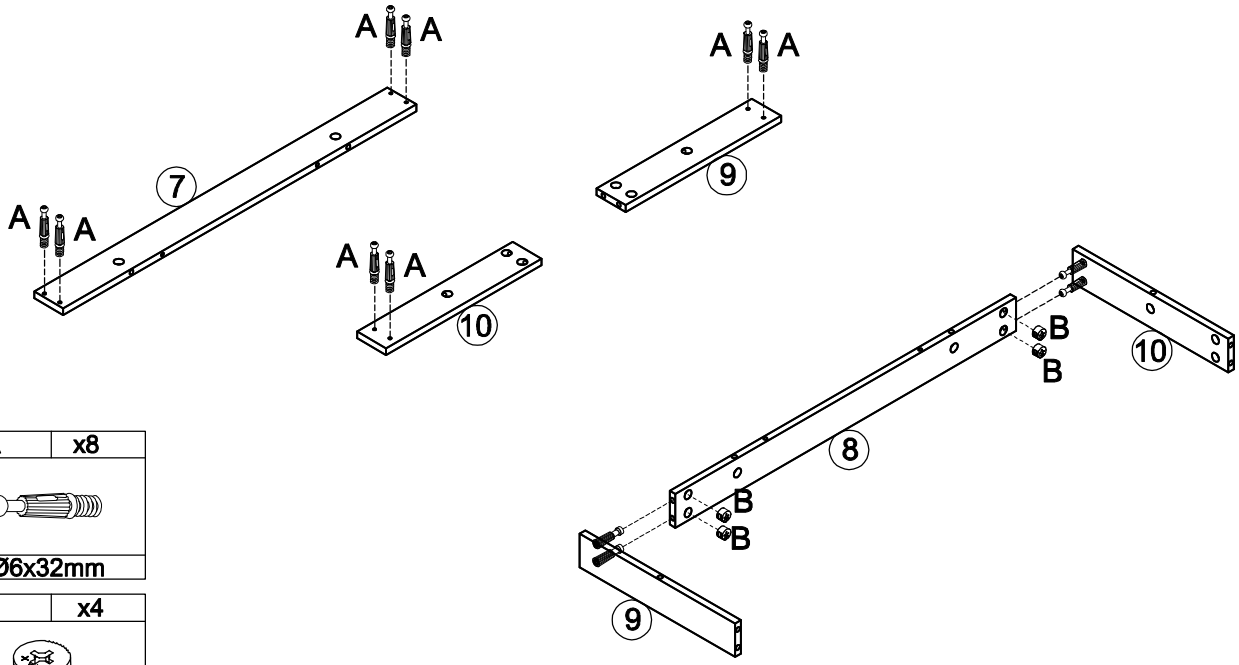

A	x8
Ø6x32mm	

B	x4
	

STEP10

Use 4Pcs No. B screws to connect Panel No. 7 to Panels No. 9 and No. 10.

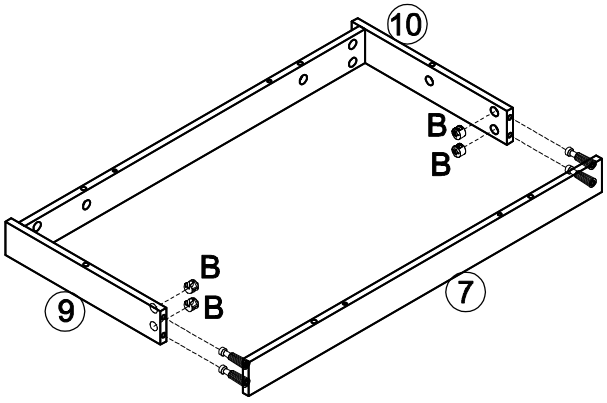

B	x4
	

STEP11

First, insert 4Pcs No. C wooden dowels into the holes in Panels No. 7 and No. 8, then use 6Pcs No. B screws to connect them to the cabinet. Finally, attach 6Pcs No. P anti-skid pads to the corresponding positions on the bottom.

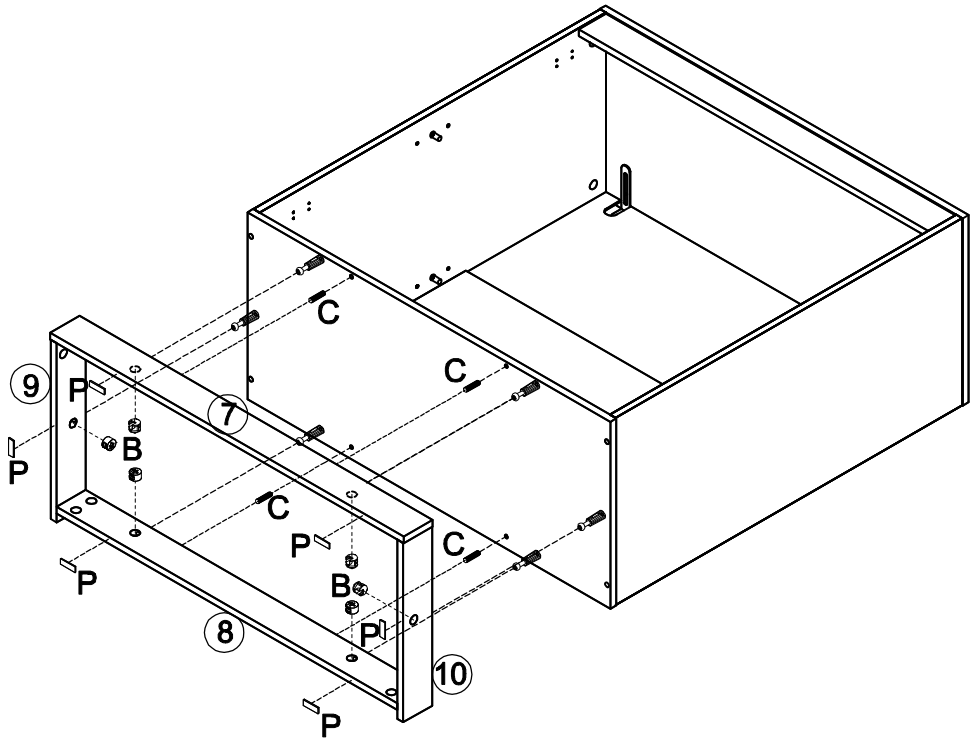

B	x6
	

C	x4
	Ø6x30mm

P	x6
	10x30x2mm

STEP12

Place Panel No. 6 on the No. G shelf supports.

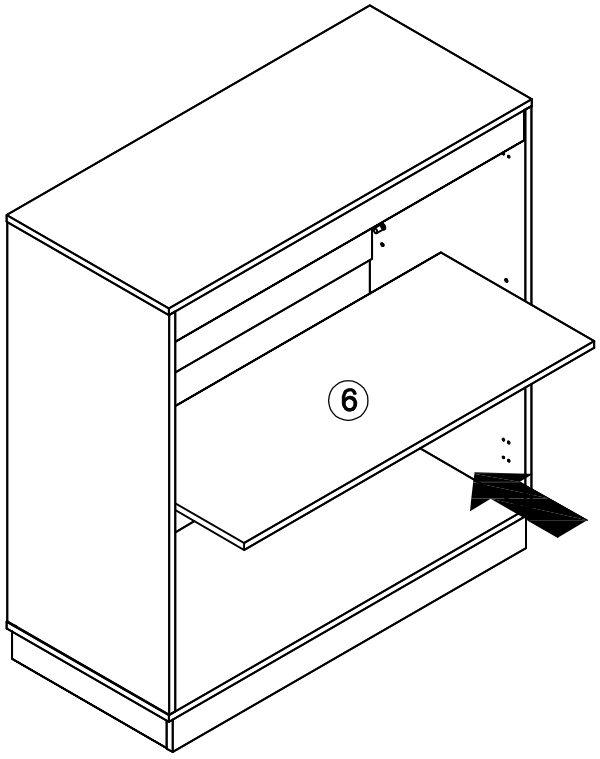

STEP13

Use 8Pcs No. I screws to install the No. H back panel clips in the positions shown in the diagram.
Installing the back panel clips helps improve the overall stability of the cabinet.

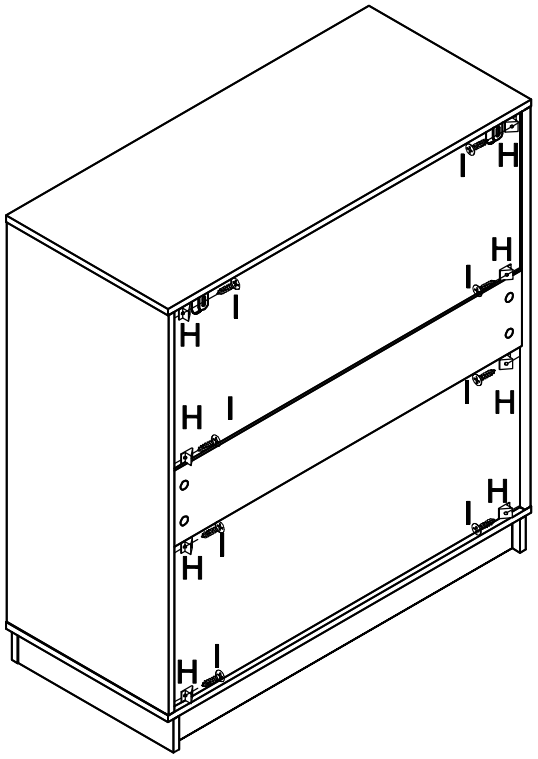

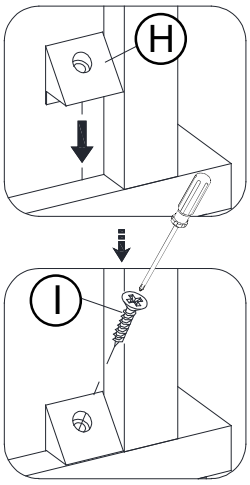

H	x8
	

I	x8
	
Ø3x16mm	

STEP14

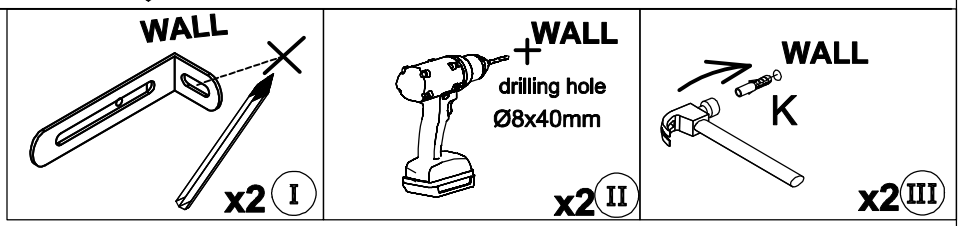

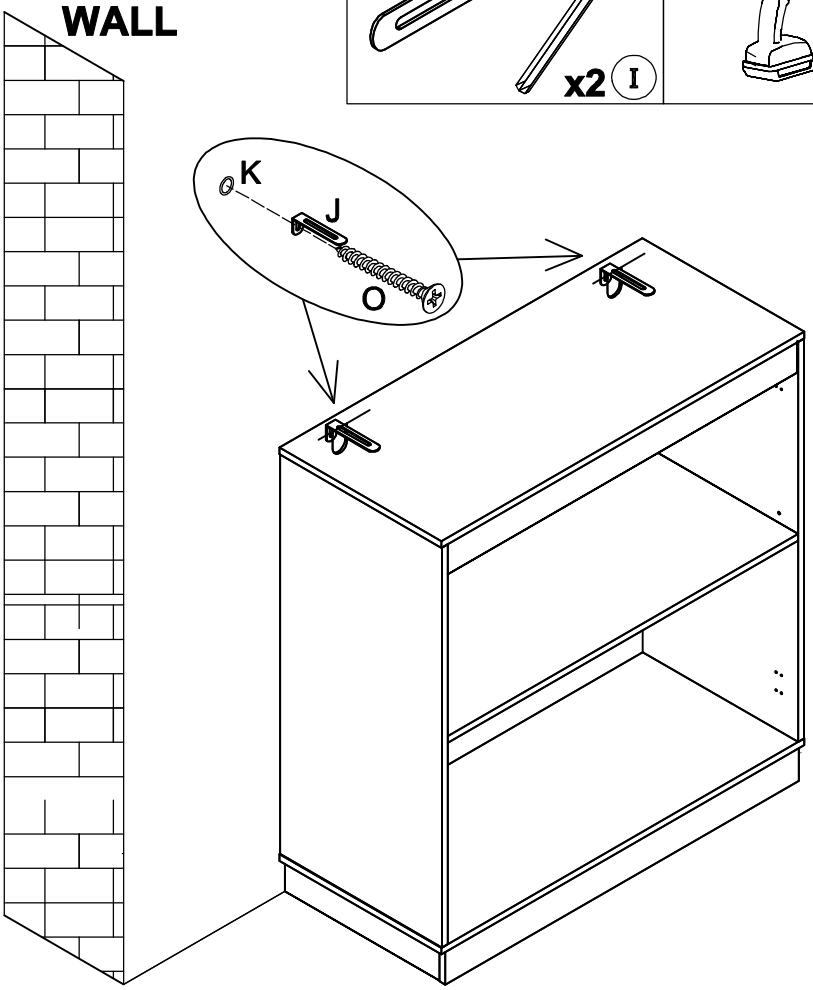

O	x2
	
M4x45mm	

K	x2
	
Ø8x38mm	

STEP15

First, use 8Pcs No. D screws to install the No. E hinges onto Panels No. 13 and No. 14, then use 4Pcs No. N screws to install the No. F handle onto the cabinet door.

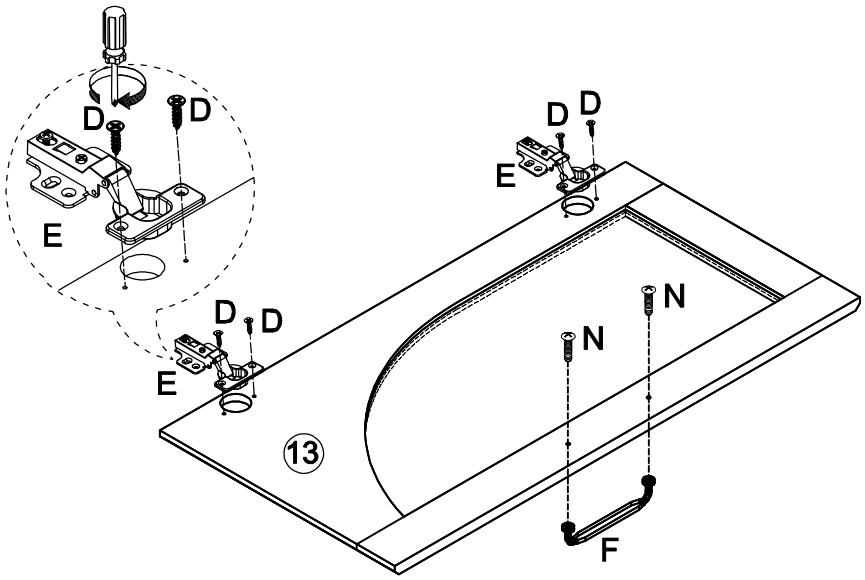

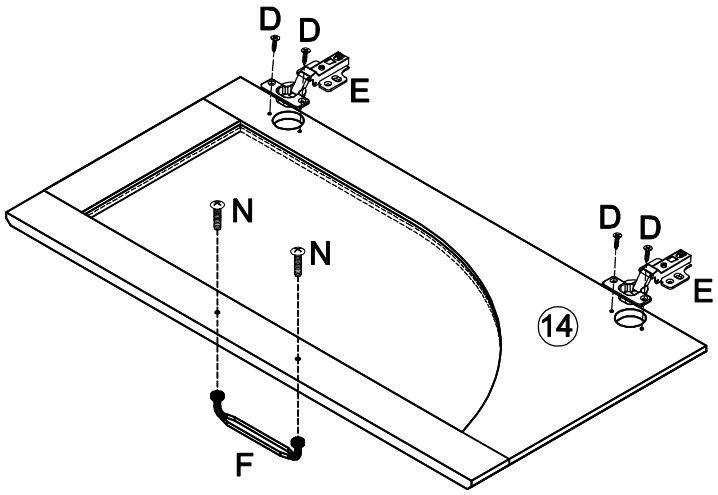

D	x8
	
M3.5x12mm	

F	x2
	

E	x4
	

N	x4
	
M4x22mm	

STEP16

Install the cabinet door onto the cabinet. Before installation, make sure to open the No. E hinges.

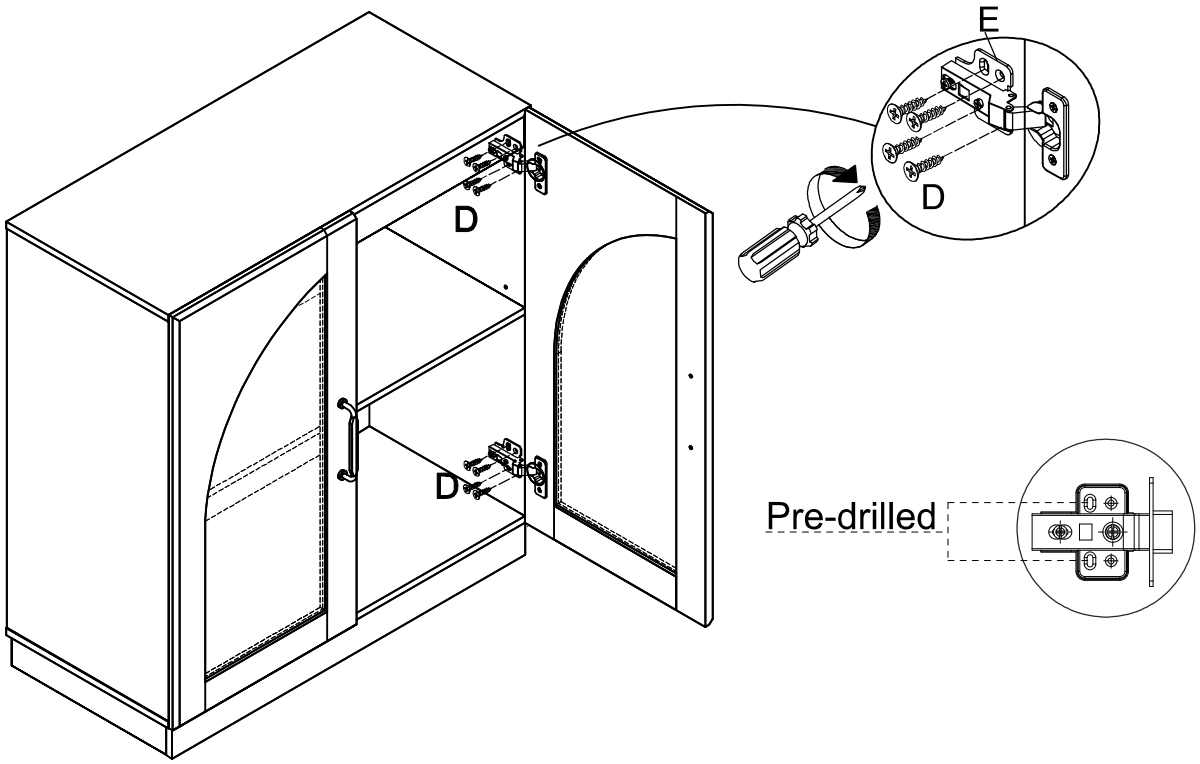

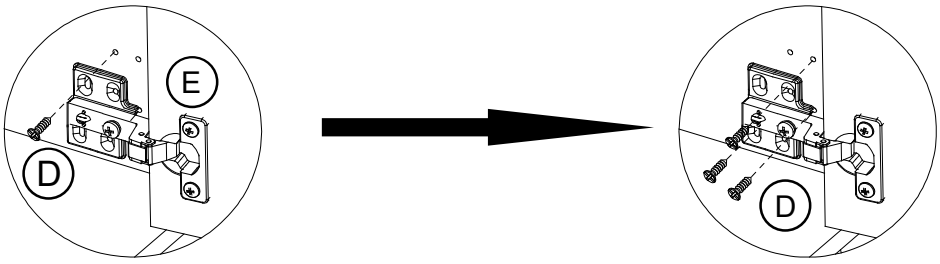

1. First, install 1Pcs No. D screw into the pre-drilled hole of each hinge (No. E) as shown in the image, then close the cabinet door. If the door has excessive or uneven spacing, refer to the steps on next page of the manual or watch the instructional video to adjust the gap.

2. After adjusting the gap, you can lock the other 3 screws. (After adjusting the cabinet doors, there may be slight misalignment in the holes. You can proceed to tighten the screws directly into panel.)

D	x16
	
M3.5x12mm	

The ways to adjust the door

- Before adjusting the hinge, please check whether the cabinet is skewed.
- If the skew can not be repaired, please remove the anti tipping device first, then adjust the cabinet to vertical position.
- Please adjust the hinge with the door open.
- Please operate it with more than 2 people, one person holds the door and the other one adjusts the screw.

Components Name

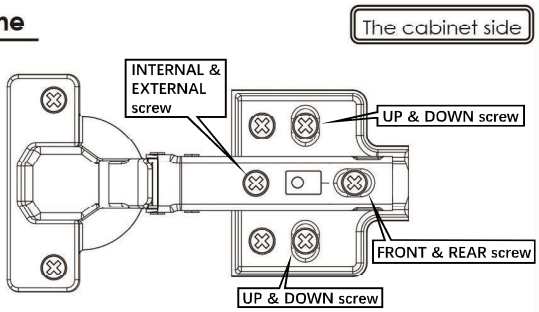

When door is crooked



Please take the following steps to adjust first.

1 Rotate the "front and rear screws" to the left

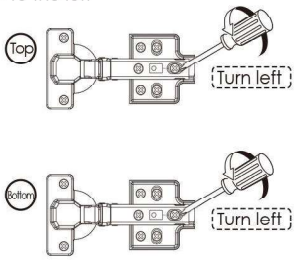

※ After adjusting the "front and rear screw", the door still does not change, please turn the "internal & external screw" to the right Slightly.

2 Push the door to the cabinet

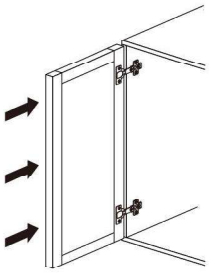

3 Rotate the "front and rear screws" to the right

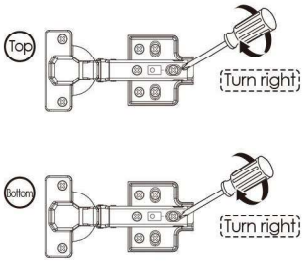

When door is leaning

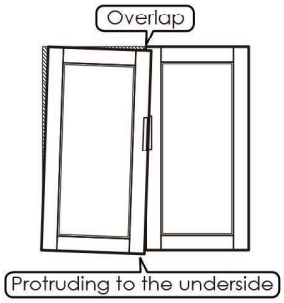

1 Turn "internal & external screw" to the left can make the top of the door tilted outward.

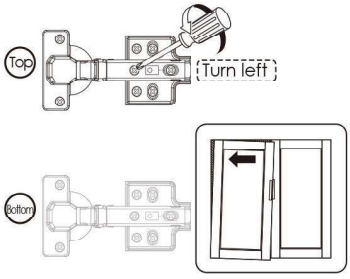

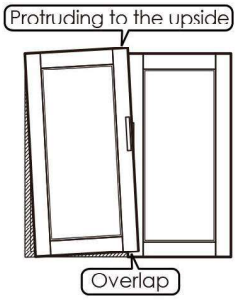

1 Turn "internal & external screw" to the left can make the bottom of the door tilted outward.

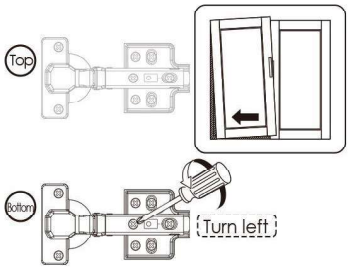

When 2 doors are not tight

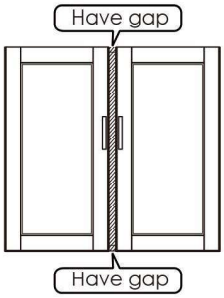

1 Turn "internal & external screw" to the right can make the door approach inside. Please adjust the doors little by little.

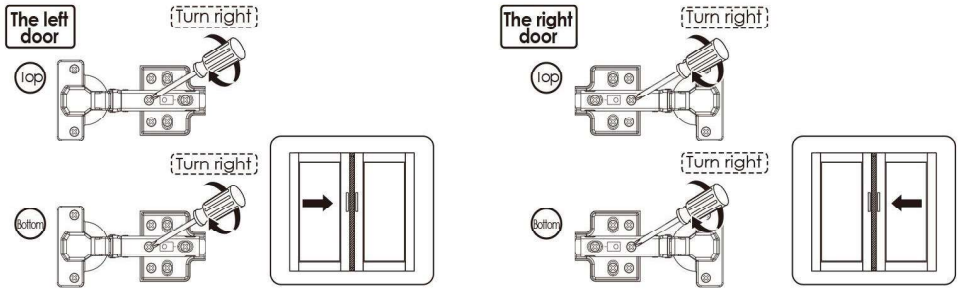

※ If the 2 doors are overlap, please turn the "internal & external screw" to the left.

When the door is higher on top

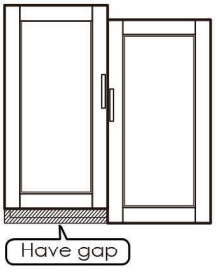

1 Turn "up & down screw" to the left

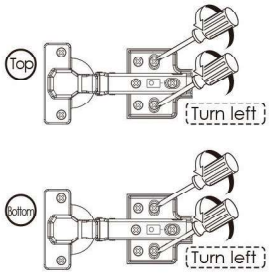

2 Lower the door's height so that 2 doors are of the same height.

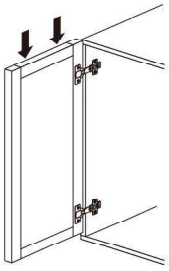

3 Turn "up & down screw" to the right

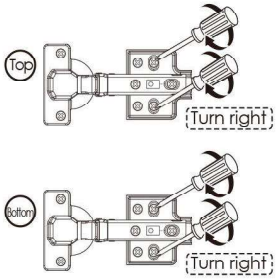

※ If the door is lower on bottom, please lift up the left door slightly on step 2



Wow, you assembled the Cabinet incredibly well!
It looks amazing !
You really did it!
You've completed a great challenge!

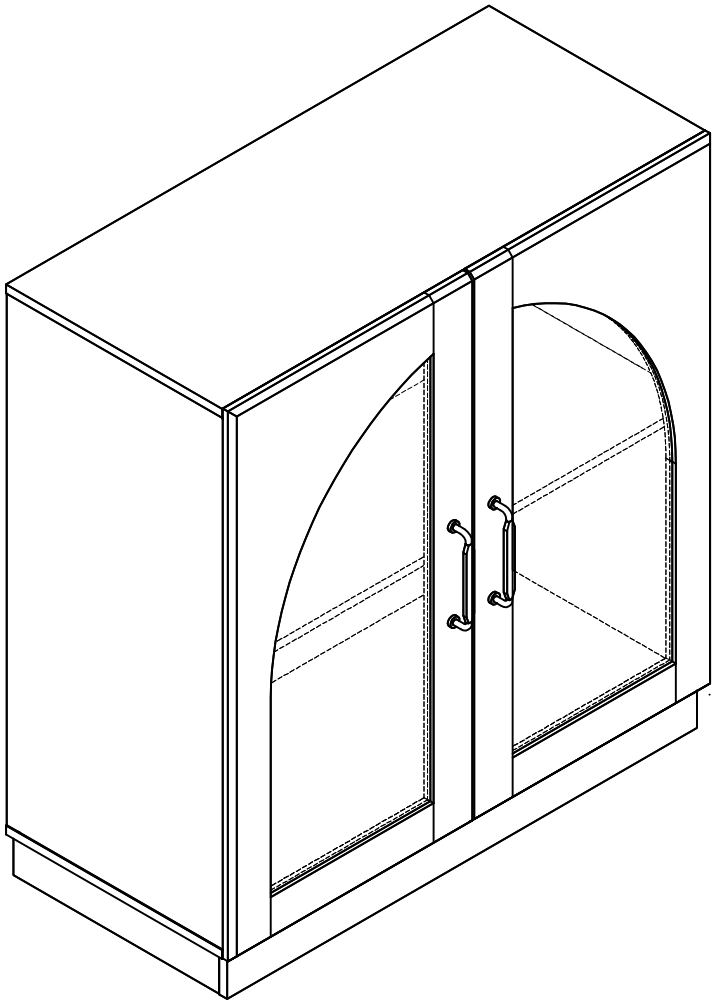

Care Instructions



Your furniture, if treated with respect and love, will last you a long time. Each piece requires light maintenance to maximize its longevity.

Few quick tips before using this product

1. Recommended weight limit for the table top is 200lbs and 44lbs for each drawers.

2. Do not open more than 2 drawers at the same time without install the tipping restraint hardware, otherwise there is a risk of tipping.

3. When storing heavier items, place them as close to the bottom as possible for stability.

4. Check and tighten the camlock and screw periodically as it may loose over the time.

How to take care of it?

1. Avoid direct sunlight or use curtains or blinds to limit the sun exposure to the product.

2. Clean the product regularly with a dry, soft cloth.

3. Avoid using abrasive or liquid cleanser.

4. Avoid placing hot objects onto the table top surface.

5. Spillage may damage the surface. Clean immediately with a dry cloth.

6. We recommend using placemats or coasters underneath glasses, cups,bowls or plates to prevent scratches to the table surface.

Frequently Asked Questions



For any enquiries or issues regarding your purchase, chat with us

1. **What should I do if my order is incomplete?**

   Our products ship flat-packed in separate boxes. When your order leaves via FedEx, you’ll get an email with tracking details. Keep in mind that FedEx may deliver your boxes separately, so wait until you have them all before you start assembling. If you need help tracking your delivery, please visit email.

2. **What should I do if my shipment is damaged or items are defective?**

   We’re really sorry if you received a damaged or defective item. Please email us or chat with us. Send a description and some photos or videos of the damage, and we’ll sort it out as quickly as possible.

3. **Can I order replacement parts?**

   Yes! Just get in touch with our customer service or via chat. Tell us your order ID, and we’ll help you with the parts you need.1

4. **What warranty do you offer?**

   Our warranty covers damage that isn’t caused by user error. If your product is damaged for these reasons, keep it and send us some photos. We’ll review the damage within 24 hours and work for you to find a solution.

5. **Why is there lubricant on the drawer slides?**

   No worries! The drawer slides are lubricated at the factory to ensure smooth movement and to help them last longer. This is completely normal.

6. **Why does the new furniture have an odor?**

   A slight smell is normal with new furniture due to the materials and packaging. It should fade away after a few days of airing out.

7. **Why is there a slight color difference in my furniture?**

   The color may appear different under varying lighting conditions and display settings. In dim lighting, the wood grain may look darker. This is completely normal and just part of the natural characteristics of the material.

8. **My furniture seems smaller than expected. What should I do?**

   Our product dimensions are accurate. Pictures often focus closely on the item, which can make it appear larger than it really is. When placed in a bigger room, the furniture might seem smaller. Room layout and screen settings can also affect your perception of size. If you have any concerns or need more details, please contact our customer service or email.
   We're here to help!

9. **What should I do if I want to return the product?**

   We offer a 30-day return policy from when you receive your order. To start a return, please contact us, email. Just let us know why you're returning the item, and we'll help you out.