Low Loft Bed with End Ladder
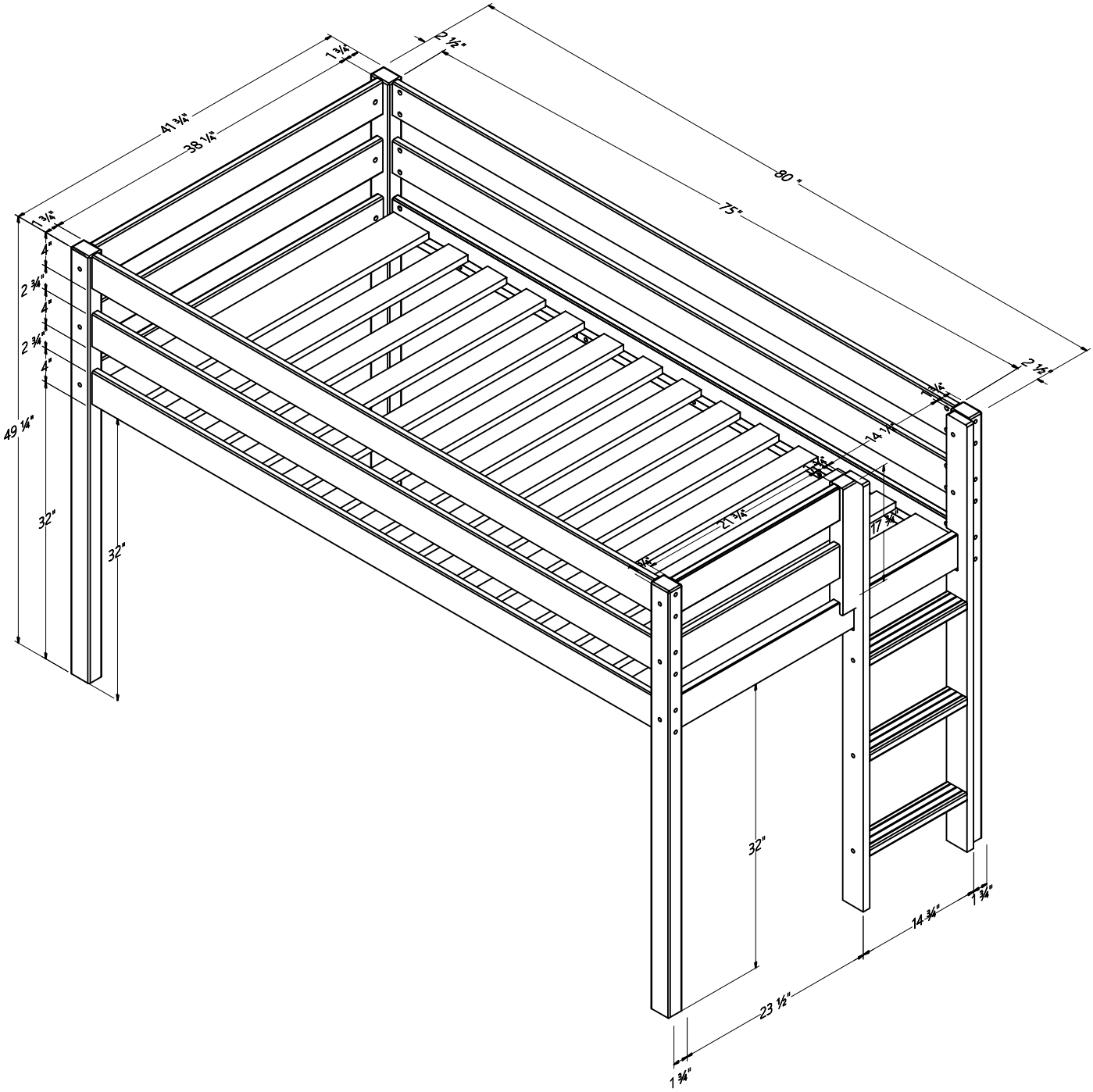
Dimensions