Bed

Assembly Instruction - Please keep properly for future reference.

If you find any missing boxes, damaged parts, or accessory shortages, please contact the customer service team of your purchasing channel immediately. We will resolve the issue as quickly as possible.

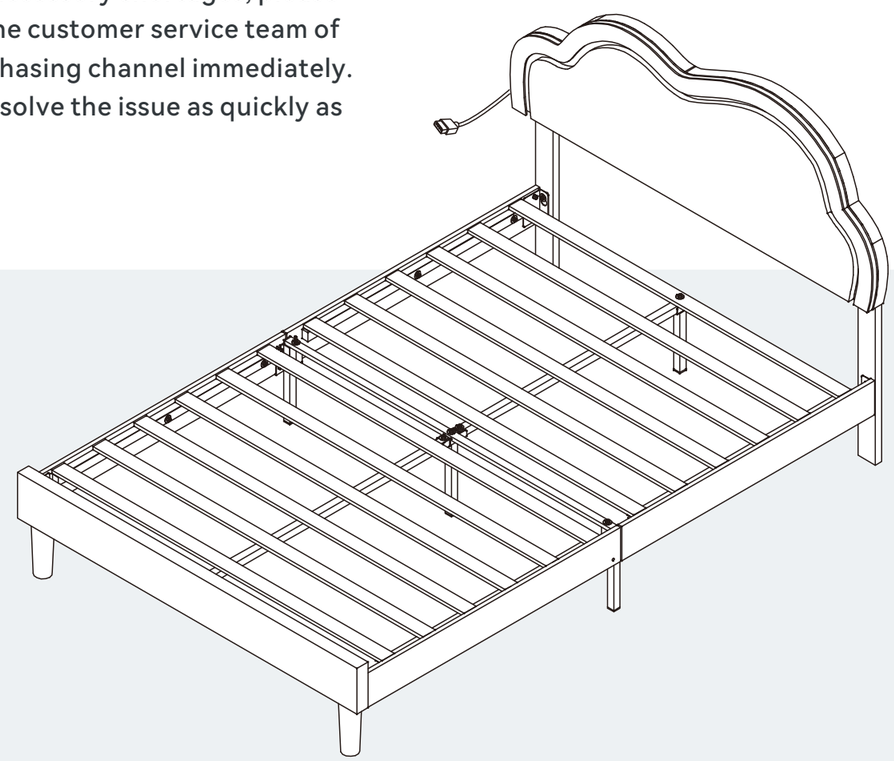

CONTACT US

- In order to receive assistance more quickly, please provide

THE FOLLOWING INFORMATION:

- Order number
- Purchase platform
- Purchase date
- Detailed description of the issue along with photos (if applicable)

Important – Please read these instructions carefully before starting the installation.

V1.0

EN

Bed

Before Assembly

Thank you for choosing this product!
To ensure safe use and long-term maintenance, please read this manual carefully and keep it properly for future reference.

Important Notice:

- To ensure a smooth and successful installation, please read this guide carefully. It provides essential information about the required tools, materials, and assembly steps. Follow the instructions in each section to avoid any issues caused by improper installation.
- Please review all operational and safety guidelines to ensure proper and secure assembly.
- This guide reflects the most current product information available at the time of printing. We reserve the right to make changes to product features, packaging, or availability without prior notice.
- Before starting assembly, ensure that all necessary electrical and environmental preparations are completed.
- This manual contains important instructions regarding installation, cleaning, and maintenance. Please read it thoroughly and keep it for future reference.

Safety Warnings

1. Follow Warning Labels

Do not remove, alter, or obscure any warning labels on the product or packaging. Always adhere to the displayed safety instructions to ensure proper usage.

2. Conduct Regular Inspections

Periodically inspect all components to ensure they are properly installed, undamaged, and securely fastened. Report any issues to customer support immediately.

3. Practice Safe Usage

Avoid playing, jumping, or engaging in activities on or under the bed, as this may cause injury or structural damage.

4. Beware of Rope Hazards

Do not attach ropes, hooks, straps, or any non-designated accessories to any part of the bed, as this may pose a safety hazard.

5. Keep This Manual for Reference

Store this manual in a safe and accessible place for future reference.

6. Safety is a Shared Responsibility

Ensuring safety is a joint responsibility between the manufacturer and the user. Please follow all safety precautions during assembly and use.

Disclaimer

We are committed to delivering safe, high-quality, and reliable products to our customers. If you have any questions, concerns, or require further assistance, please contact our customer service team without hesitation.

Safety Instructions / Warnings

Please read and follow all instructions carefully before installation and use.

WARNING:
Risk of electric shock – Do not open or disassemble electrical parts.

- **Only use the product with a properly certified USB power supply (DC 12V, 4W/m).**
- Do not use with damaged power cords or plugs.
- Keep power cables away from moving or sharp parts of the furniture.
- Do not use extension cords or power strips unless specifically approved for the load.
- This product is **not a toy**. Do not allow children to play with electrical components or moving parts.
- Children under 8 years old must be kept away from the furniture unless continuously supervised.
- Keep remote controls, control switches, and ports out of children's reach.
- Always **disconnect the product from power** before cleaning, maintenance, or relocation.
- Do not attempt to open, modify, or repair electrical components.
- **Repairs must be performed by qualified professionals only.**
- Do not insert any foreign objects into openings or mechanisms.
- Clean with a dry cloth or a slightly damp soft cloth. Do not use solvents.
- This product is intended **for indoor** use only in dry environments.
- Do not expose the furniture to moisture, liquids, or direct sunlight.
- Ensure stability and clearance around any moving parts (e.g., lift mechanisms, recliners).
- Do not overload power outlets or USB ports beyond the specified ratings.
- **Always unplug the product when it is not in use.**

FCC Information:

CAUTION: Changes or modifications not expressly approved by the party responsible for compliance could void the user's authority to operate the equipment!

This device complies with Part 15 of the FCC Rules. Operation is subject to the following two conditions:

1) This product may cause harmful interference.

2)This product must accept any interference received, including interference that may cause undesired operation.

WARNING: Changes or modifications to this product not expressly approved by the party.responsible for compliance could void the user's authority to operate the product.

Note: This product has been tested and found to comply with the limits for a Class B digital device pursuant to Part 15 of the FCC Rules, These limits are designed to provide reasonable protection against harmful interference in a residential installation.

This product generates, uses and can radiate radio frequency energy, and if not installed and used in accordance with the instructions, may cause harmful interference to radio communications. However, there is no guarantee that interference will not occur in a particular installation. If this product does cause harmful interference to radio or television reception, which can be determined by turning the product off and on, the user is encouraged to try to correct the interference by one or more of the following measures.

- Reorient or relocate the receiving antenna.
- Increase the distance between the product and receiver.
- Connect the product to an outlet on a circuit different from that to which the receiver is connected.
- Consult the dealer or an experienced radio/TV technician for assistance.

Maintenance and Care Recommendations

1. Regular Cleaning

To maintain hygiene and prevent bacterial growth, clean the product regularly. Use a damp, well-wrung cloth to avoid excess moisture and prevent surface scratches.

2. Prevent Corrosion

Keep the product away from acidic or alkaline substances, as they may cause corrosion or damage to the materials.

3. Use Only Authorized Replacement Parts

Do not use unauthorized or third-party replacement parts, as they may compromise the product's safety and durability. If a replacement is needed, contact the manufacturer or an authorized dealer for approved parts.

4. Cleaning Precautions

Do not machine wash or rinse any part of the product directly with water, as this may damage the materials and reduce product lifespan.

5. Prevent Pests

Keep wooden furniture away from damp or humid areas to prevent pest infestations and wood damage. Use a dehumidifier or air conditioner during humid seasons to maintain a dry environment.

6. Protect from Sunlight

Avoid placing furniture in direct sunlight, as prolonged exposure may cause cracking, discoloration, or fading. If sunlight exposure is unavoidable, use curtains or shades to minimize damage.

7. Keep Away from Fire

Position furniture away from heat sources and open flames to prevent damage and maintain its condition.

8. Perform Regular Care

Apply furniture oil periodically to maintain the wood’s shine, prevent cracks, and extend its lifespan.

9. Clean Frequently

Regularly vacuum dust and debris, especially underneath furniture, to keep it clean and hygienic.

10. Maintain a Dry Environment

Ensure good ventilation to prevent moisture buildup, which can damage wood. Use a dehumidifier if necessary to protect the furniture.

11. Avoid Corrosive Liquids

Keep furniture away from acidic or alkaline substances, as these can damage the surface and reduce durability.

12. Use a Damp Cloth for Cleaning

Wipe furniture with a well-wrung damp cloth to prevent water damage or swelling. Avoid excessive moisture exposure.

13. Limit Sun Exposure

Excessive sunlight can dry out and weaken wood. Position furniture in shaded areas or use UV-blocking curtains to protect it from damage.

Customer Service Guide

Thank you for choosing our product! We are committed to providing you with excellent service. If you find any missing parts, damaged packaging, or product damage after receiving all packages, please follow the steps below to quickly contact our customer service team. We will do our best to resolve your issue.

1. Missing Parts

Verify Parts:

1. Refer to the “Parts List” in the manual to verify the name, specifications, and quantity of the missing parts.
2. Take a clear photo of the parts list and mark the missing parts with detailed information, e.g., “Missing 5 pieces of M6×30mm screws.”

Contact Us:

By Email:

Send an email with the subject line “Missing Parts Issue.” Include the following in the email:

- A description of the missing parts and a photo of the parts list.
- Order details (order number, purchase platform, purchase date).

2. Product or Packaging Damage

If it affects normal use:

Steps:

1. Take clear photos or videos showing the damaged parts and the extent of the damage (multi-angle shots are recommended).
2. Email the photos/videos along with order details with the subject line “Product Damage Issue.”

Resolution:

After verification, we will arrange for a replacement part, product exchange, or refund as quickly as possible.

If it does not affect normal use:

Steps:

1. Contact our customer service team.
2. Provide a description of the damage and include relevant photos or videos.

Resolution:

We will provide repair guidance or an appropriate compensation plan based on the specific situation.

Contact Us:

Customer Service Email

Helpful Tips

To process your issue efficiently, please prepare the following information:

- Order details (order number, purchase platform, purchase date).
- Clear photos or videos.
- We are committed to providing quick and professional solutions, no matter the size of the issue, to ensure your satisfaction.

Thank you for your trust and support!
We hope you enjoy using our product!

Parts List

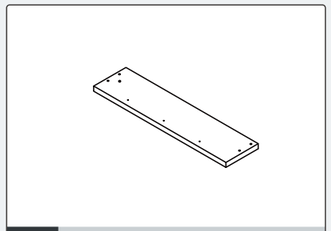
3 x2

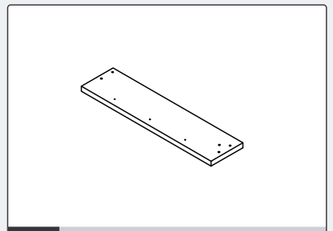
4 x2

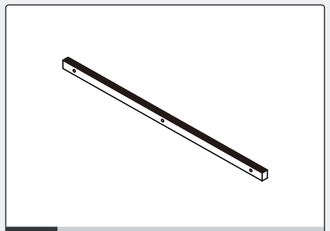
8 x4

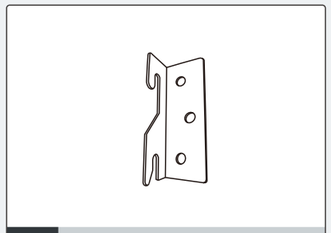
10 x2

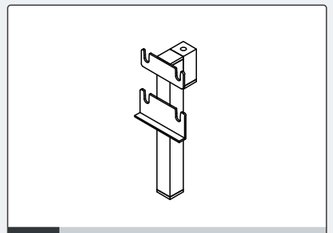
11 x2

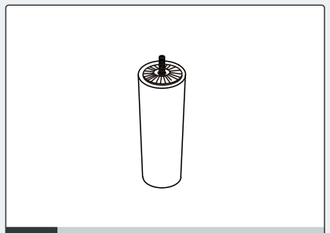
12 x2

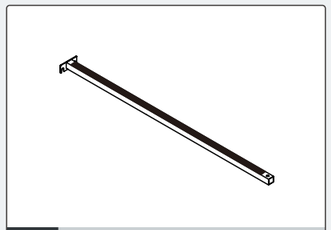
13 x1

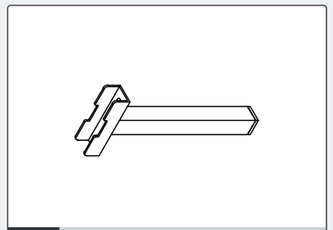
14 x2

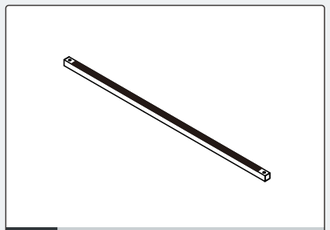
15 x1

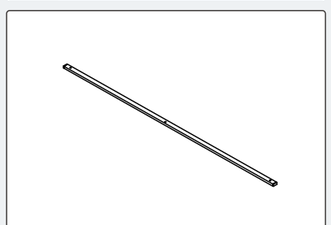
16 x1

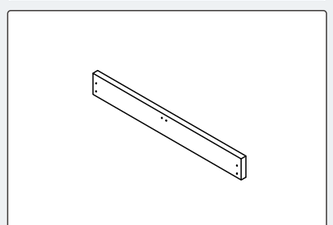
17 x1

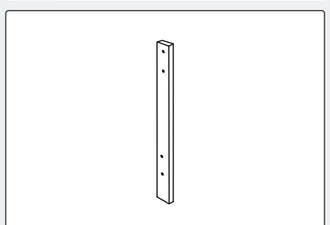
18 x2

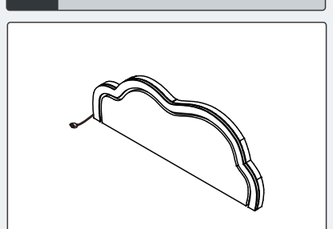
20 x1

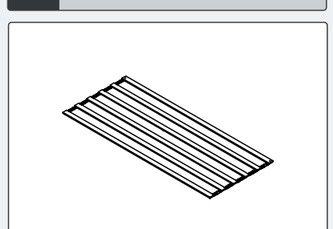
23 x1

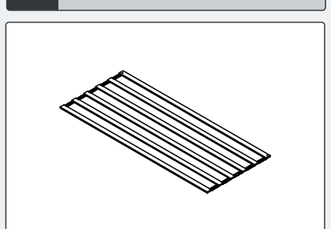
24 x1

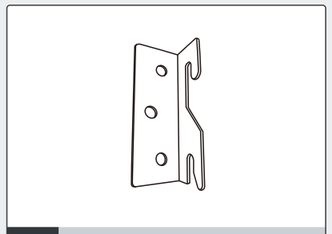
25 x2

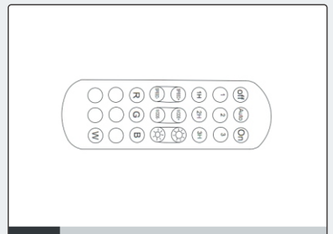
26 x1

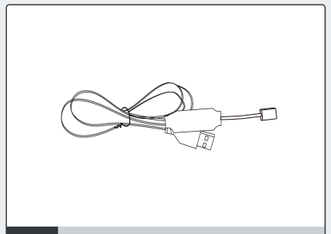
27 x1

Hardware List

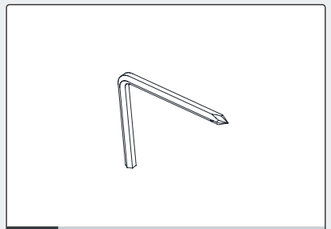
A M6 x1

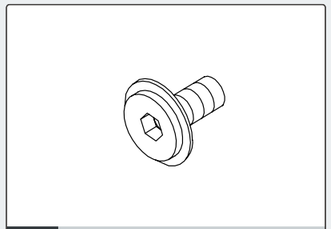
B M8*18mm x30

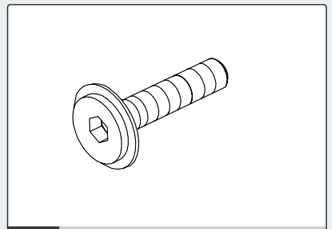
C M8*40mm x21

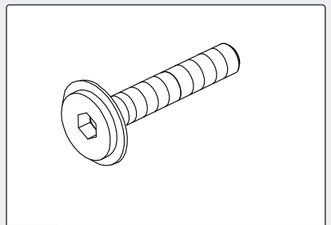
D M8*55mm x1

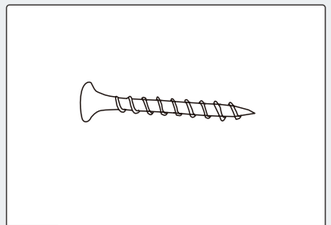
E M4*35mm x2

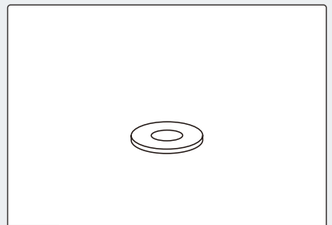
F M6*18mm x2

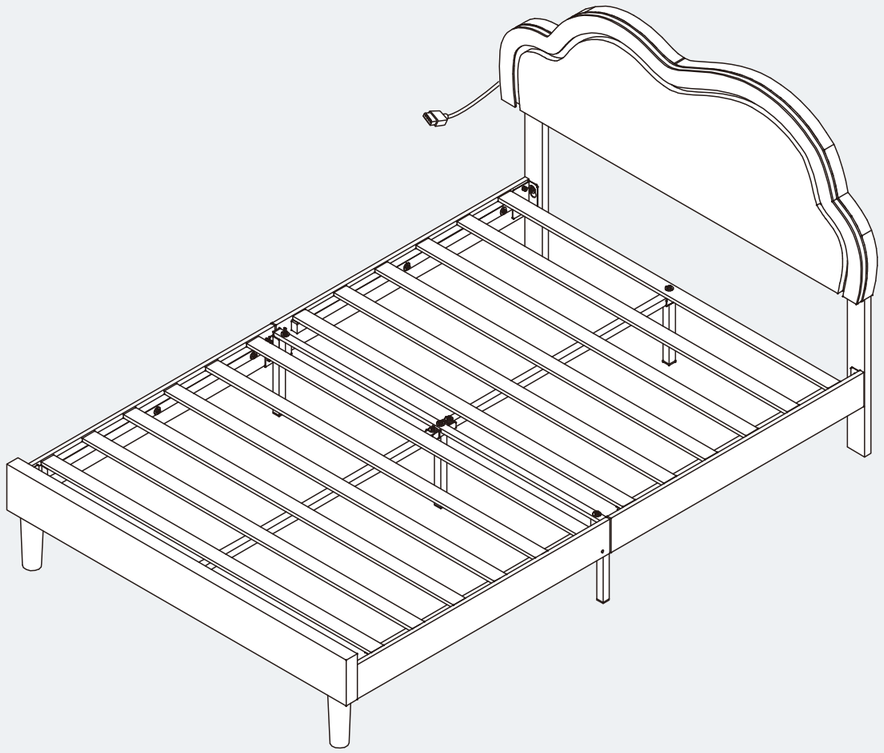

Important:
In each of the previous steps, tighten all screws to approximately 70% to stabilise the overall frame during assembly. Do not fully tighten any screws until the final step is completed.

Tools & Equipment

2 people needed

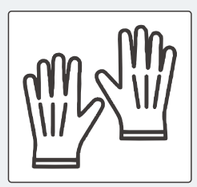

Work gloves

Tape measure

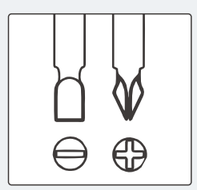

Other Tools Required
Phillips Screwdriver
(Not Included)

Headboard Section Installation

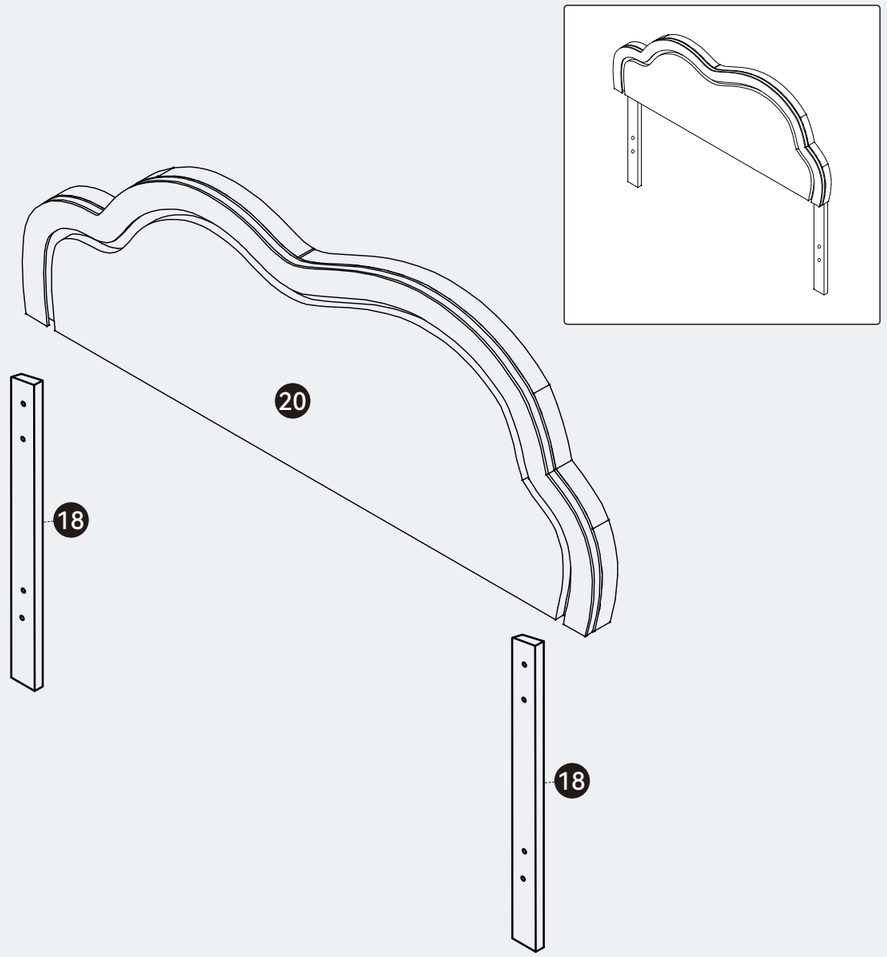

The headboard section assembly requires a total of labeled panels shown in the diagram. Please locate all of them and prepare them for use.

Hardware Accessory List		
B		M8*18mm x4
C		M8*40mm x4

Note:

Ensure all hardware components are accounted for before beginning assembly. Missing or damaged hardware should be reported to customer service for replacement.

EN

Step 1 Headboard Section

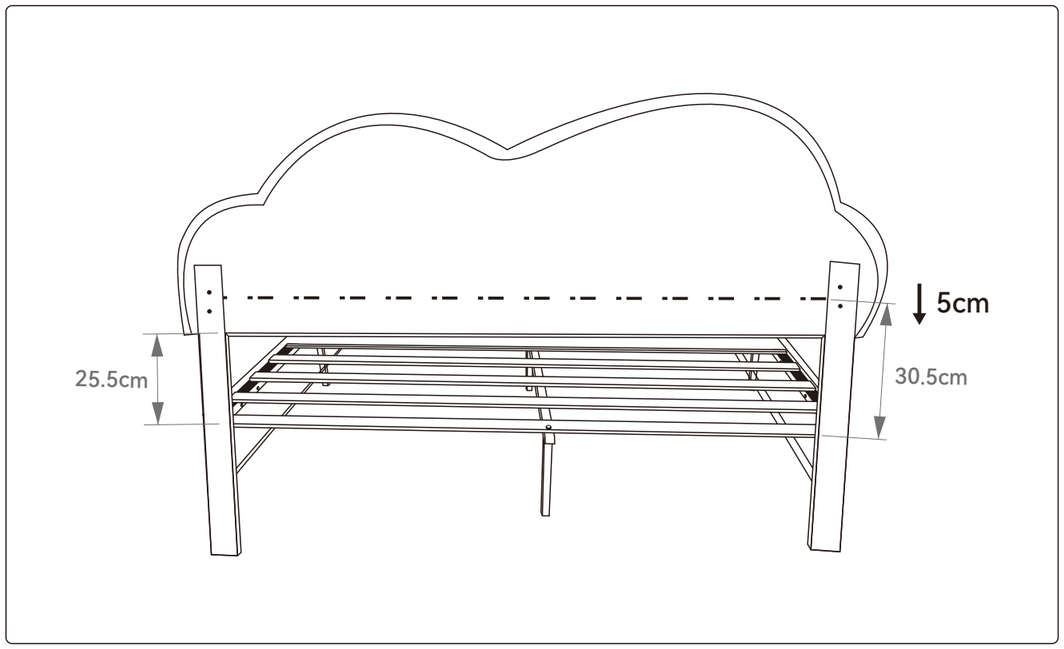

The headboard height offers two adjustment options. Choose the appropriate installation height based on your needs (25.5 cm / 30.5 cm above the mattress base).

Step 2 Headboard Section

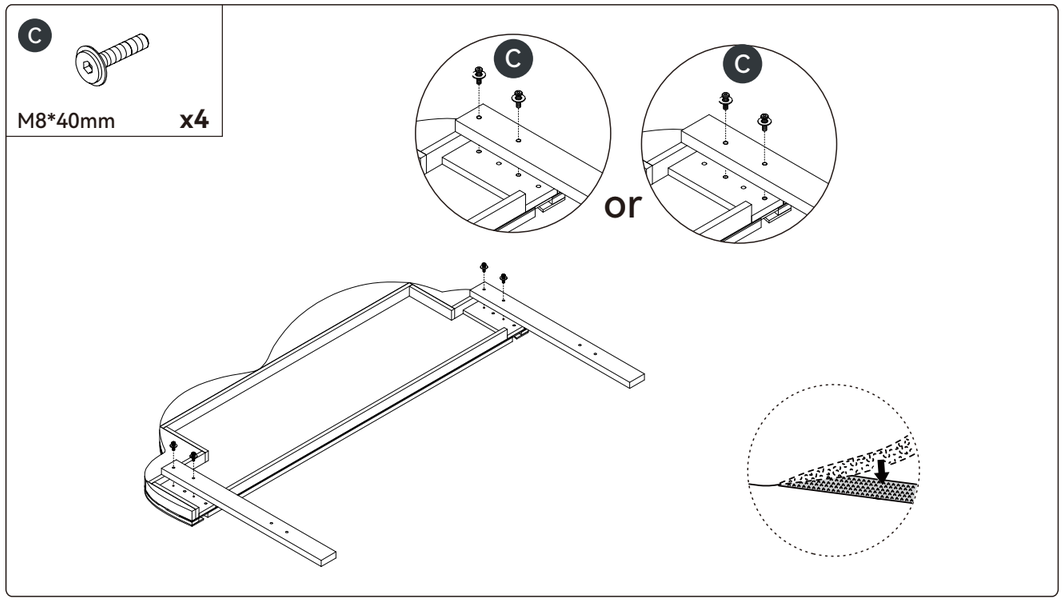

Insert Bed Post 18 into the slot of Headboard 20 and secure it with Screw Rod C. Attach the white cover cloth firmly and smoothly.

Step 3 Headboard Section

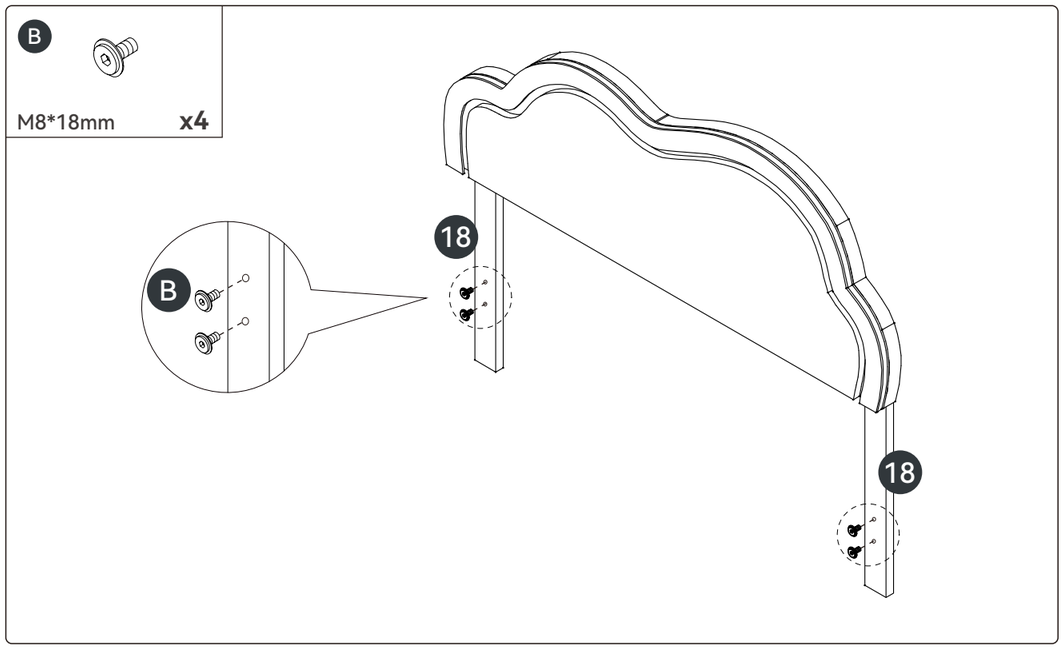

Pre-assemble Screw Rod B into the corresponding holes on Bed Post 18 without tightening.

Note:
Tighten Screw Rod B only about 50% to allow for later installation.

EN

EN

Frame Parts Section Installation

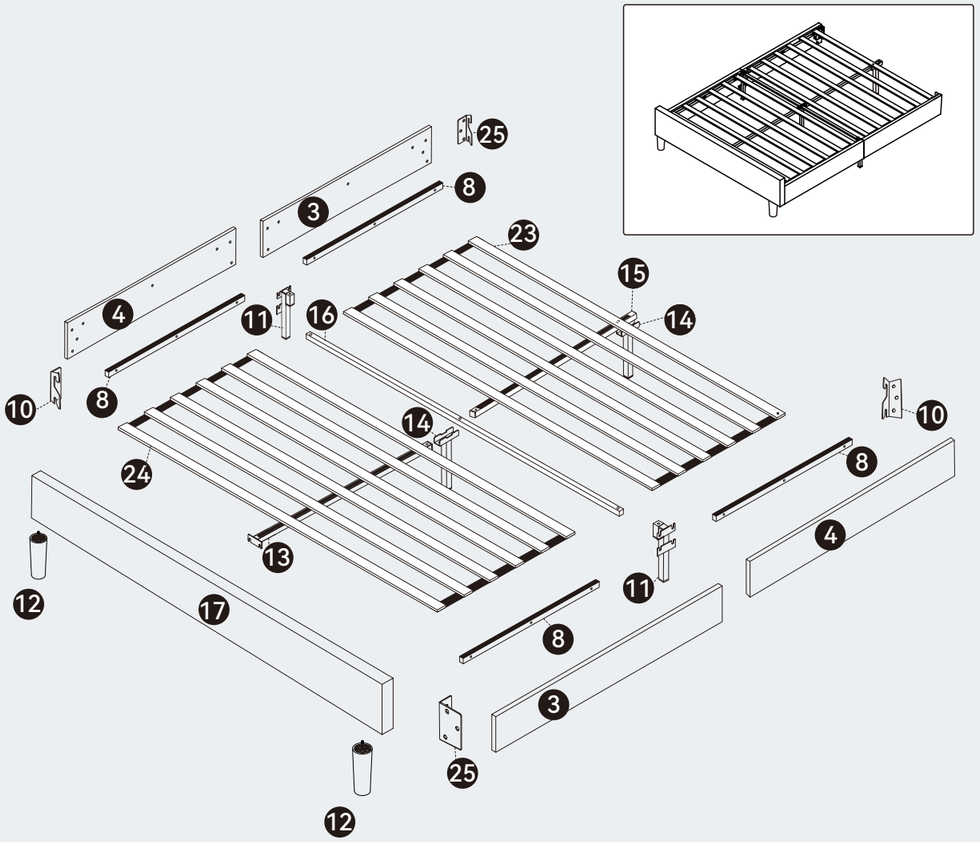

Hardware Accessory List

B		M8*18mm **x26**
C		M8*40mm **x17**
D		M8*55mm **x1**
E		M4*35mm **x2**
F		M6*18mm **x2**

The frame parts section assembly requires a total of labeled panels shown in the diagram. Please locate all of them and prepare them for use.

Note:

Ensure all hardware components are accounted for before beginning assembly. Missing or damaged hardware should be reported to customer service for replacement.

EN

Step 4 Frame Parts Section

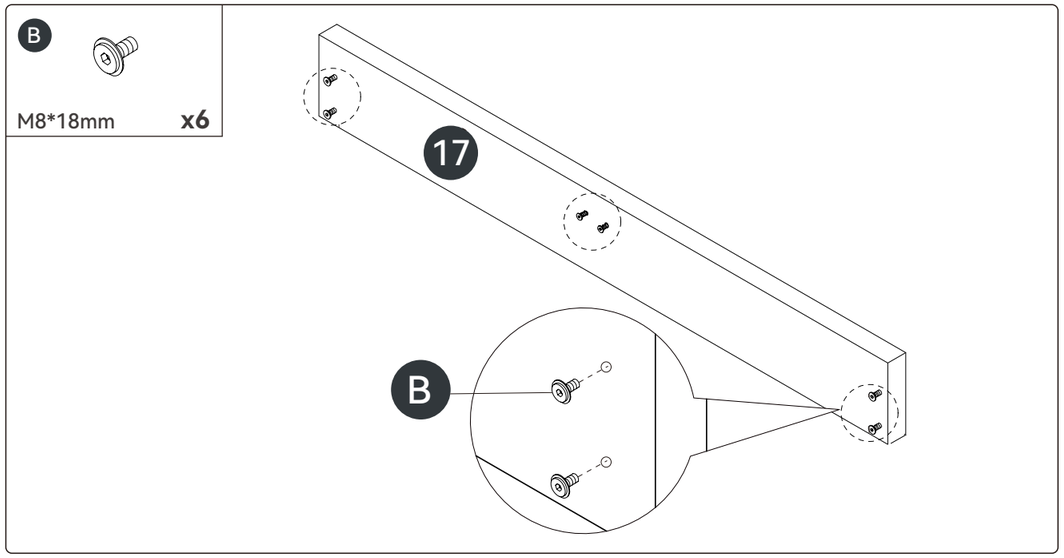

Pre-assemble Screw Rod B into the corresponding holes on Footboard 17 without tightening.

Note:
Tighten Screw Rod B only about 50% to allow for later installation.

Step 5 Frame Parts Section

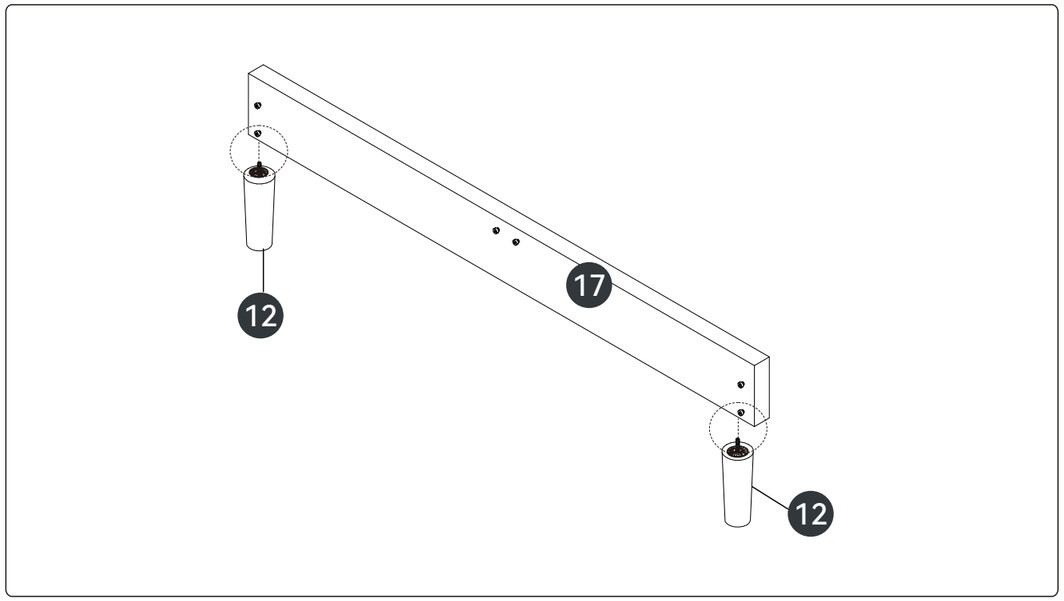

Attach Plastic Foot 12 to the holes at the bottom of Footboard 17 and tighten it securely.

EN

Step 6 Frame Parts Section

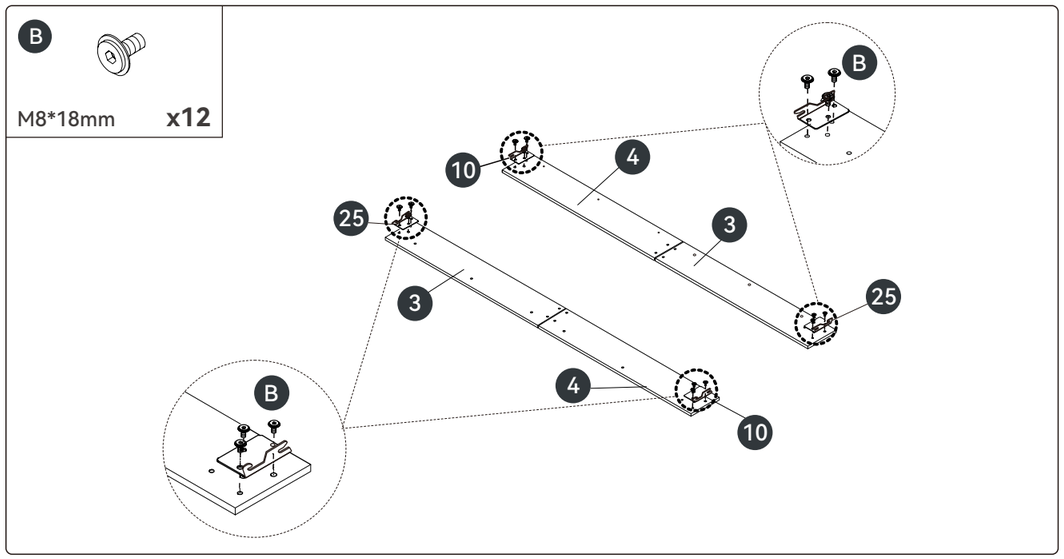

Position Side Rails 3 and 4 as shown in the diagram. Install Brackets 10 and 25 on both sides of Side Rails 3 and 4, and connect them using Screw Rod B.

Note: Pay attention to the vertical direction of the holes on the side rails and the left/right orientation of the brackets. Insert the screws first, then fully tighten them.

Step 7 Frame Parts Section

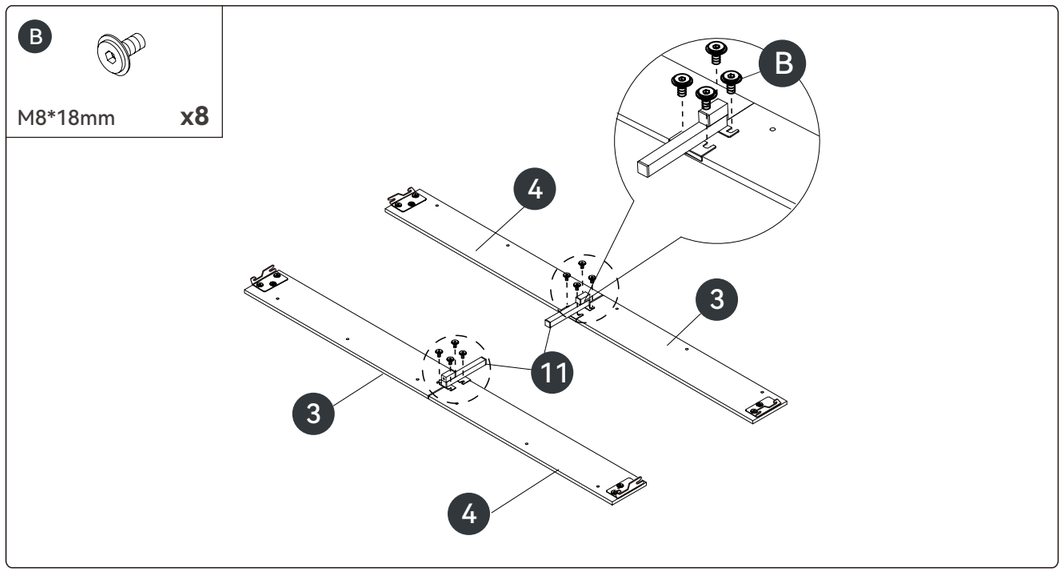

Install Metal Leg 11 at the center position between Side Rails 3 and 4, and secure it using Screw Rod B. Insert the screws first, then tighten them completely.

Step 8 Frame Parts Section

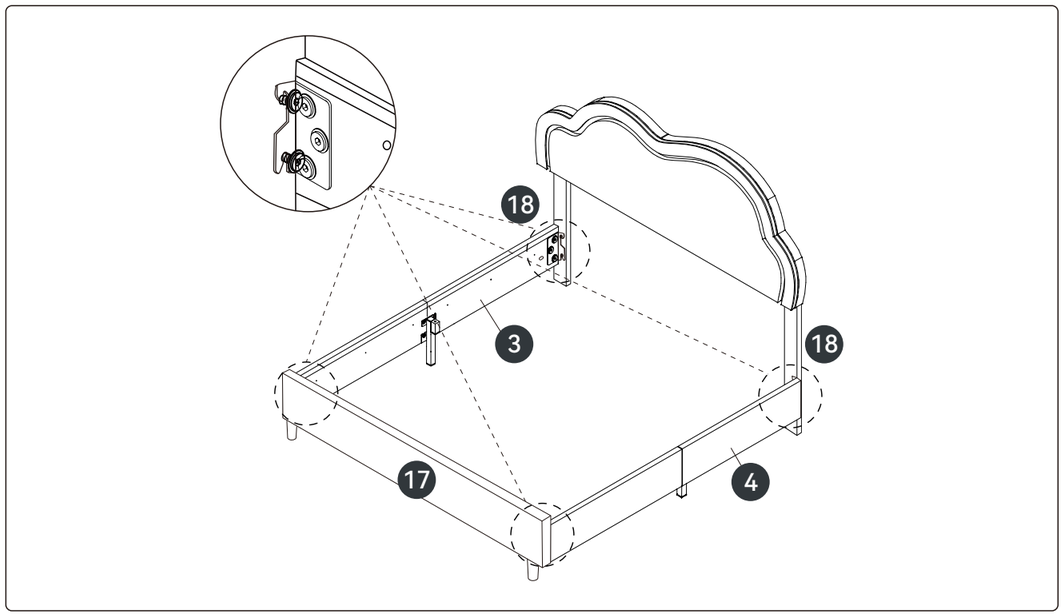

Connect the brackets on Side Rails 3 and 4 to the pre-assembled, untightened screw rods on both sides of Footboard 17 and Bed Post 18. Tighten all screws to about 70%, then fully tighten them.

Step 9 Frame Parts Section

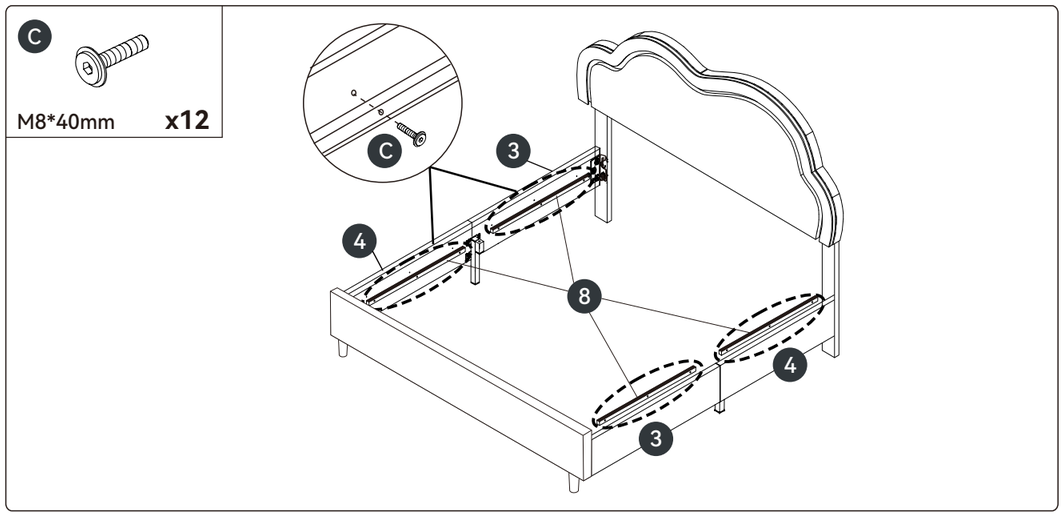

Install Wooden Slat 8 into the corresponding holes on Side Rails 3 and 4, and secure it with Screw Rod C.

Note: The side with the hook-and-loop tape should face upward. Insert all Screw Rod C pieces first, then tighten them completely.

EN

Step 10 Frame Parts Section

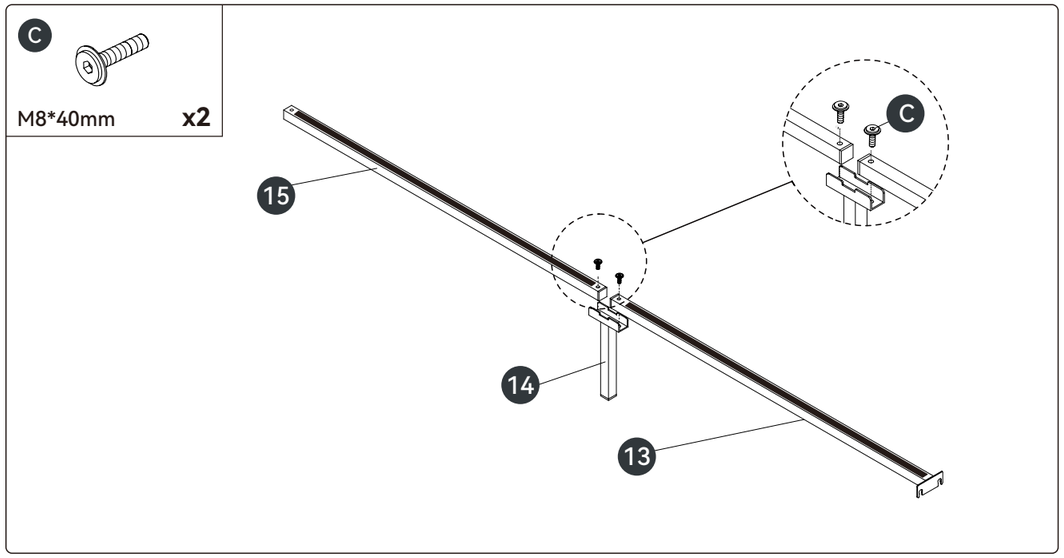

Connect Metal Tubes 13 and 15 using Center Leg 14 and secure them with Screw Rod C.

Note: The black noise-reducing pad should face upward, and the hook on Tube 13 should face downward.

Step 11 Frame Parts Section

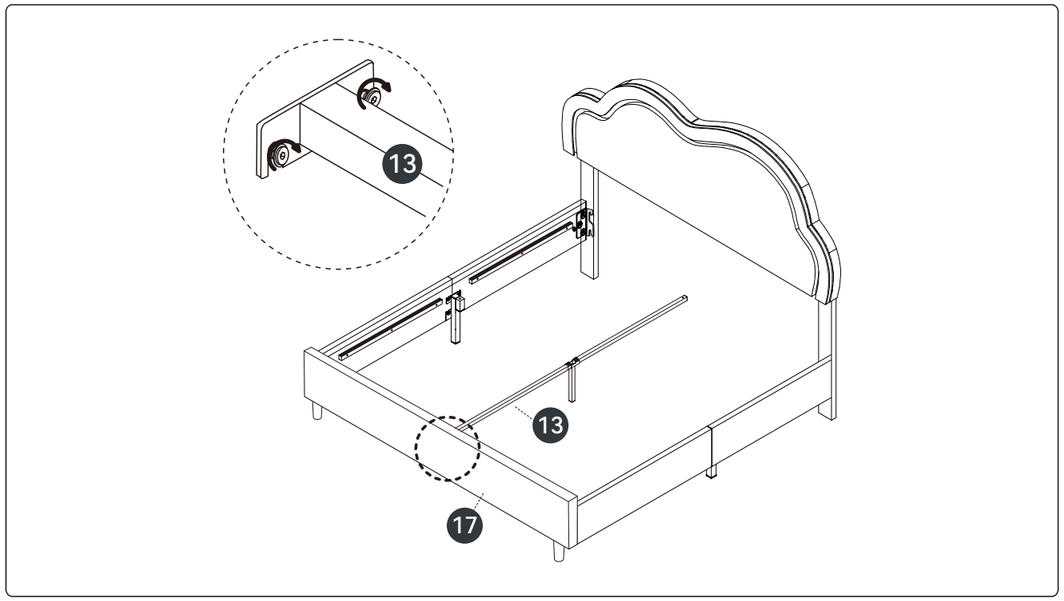

Hang Metal Tube 13 onto the pre-assembled screw rod on Footboard 17, then tighten the screw.

Step 12 Frame Parts Section

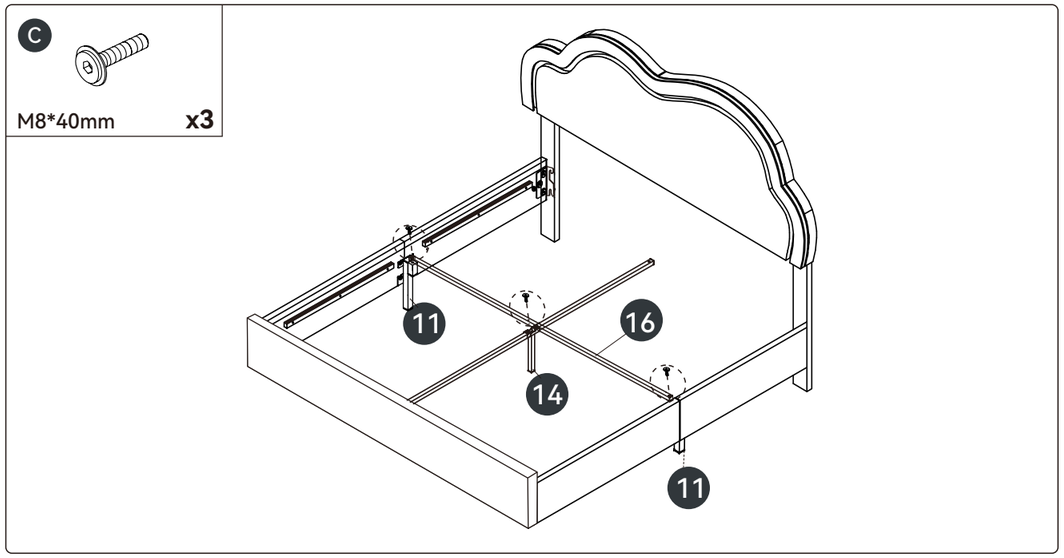

Install Metal Tube 16 into the corresponding holes on Middle Legs 11 and 14, and secure it with Screw Rod C.

Note:
Insert the screws first, then tighten them completely.

Step 13 Frame Parts Section

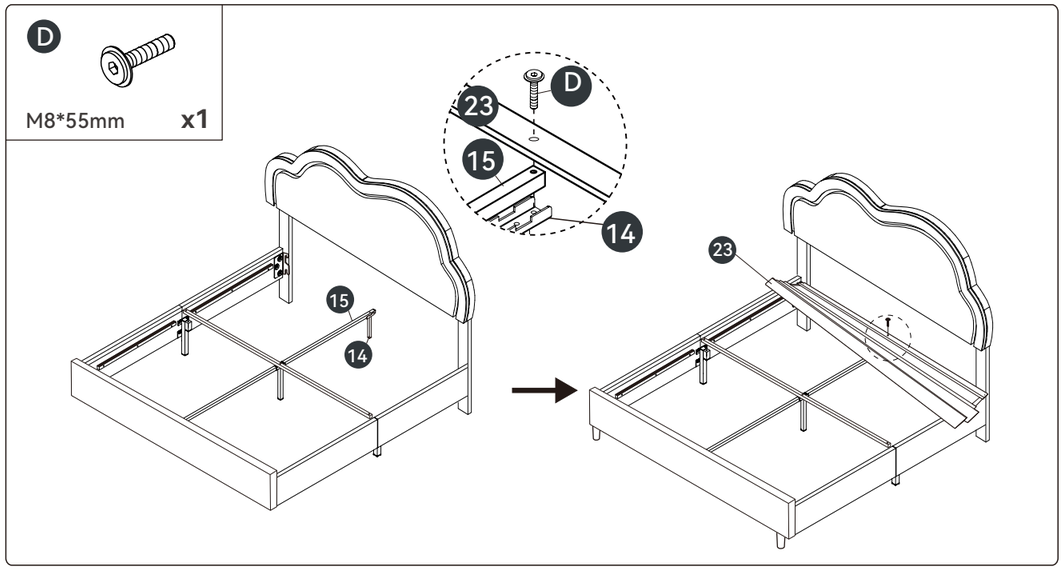

First place Middle Leg 14 under Metal Tube 15 (align them). Then put Slat 23 on top. Make sure the first row of holes on Slat 23 is positioned as shown in the diagram. Use Screw D to connect 23, 15, and 14, and tighten the screw securely.

EN

EN

Step 14 Frame Parts Section

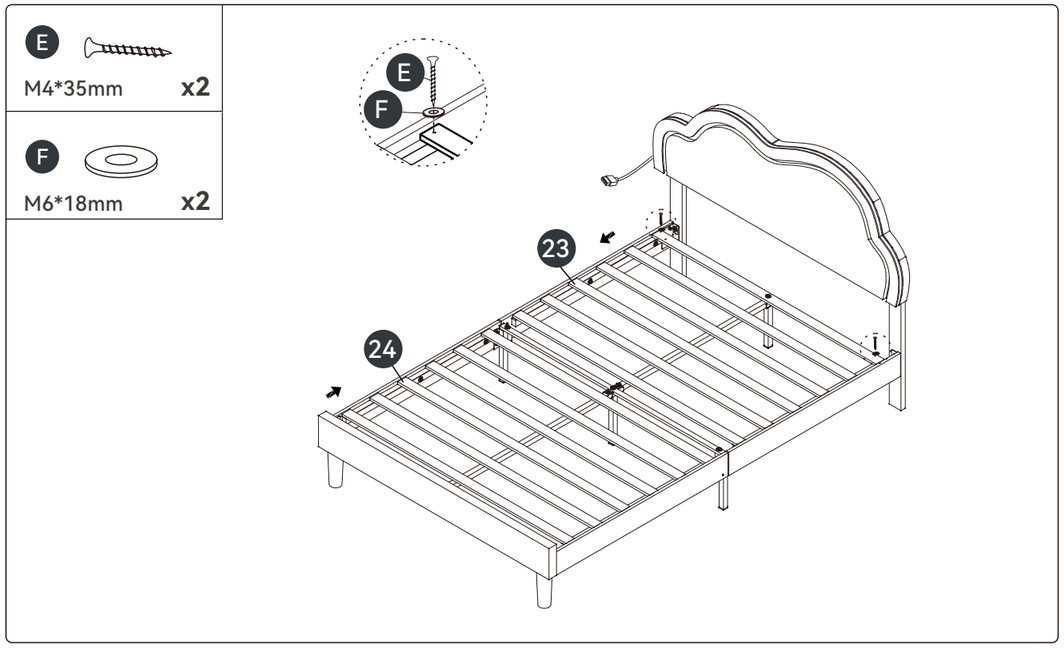

Lay out Slats 23 and 24. Install Self-tapping Screws E and Washers F into the pilot holes on both sides of Slat 23.

Step 15 Frame Parts Section

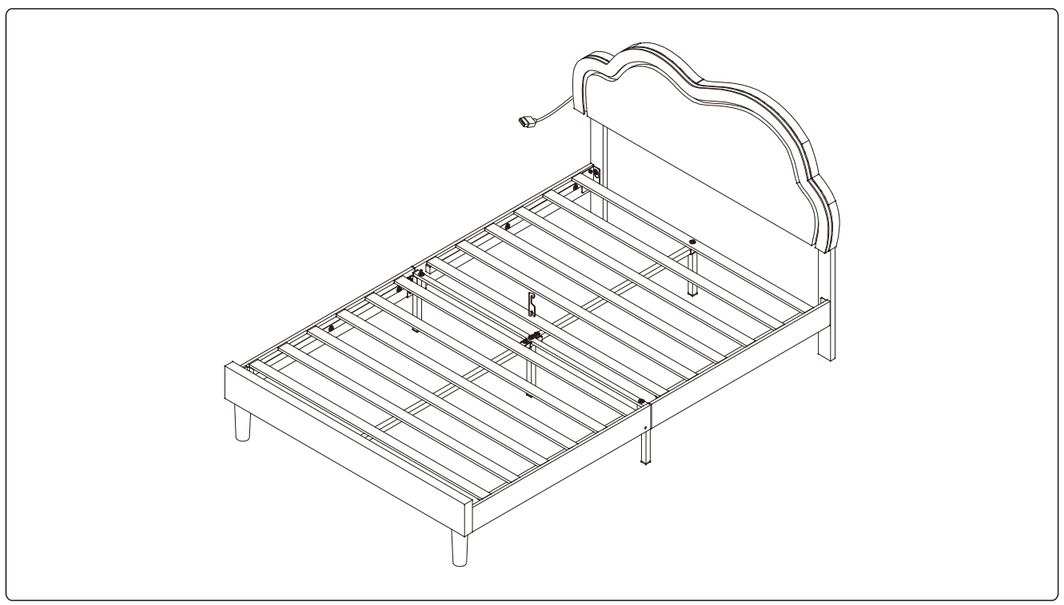

Installation completed.

Step 16 Frame Parts Section

EN

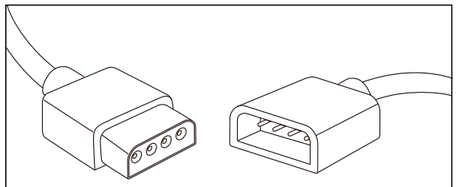

To prevent separation at the joint, the tape can be wrapped around the joint.

NOTE: The black part of the receiver needs to be exposed to air in order to better control the LED light.

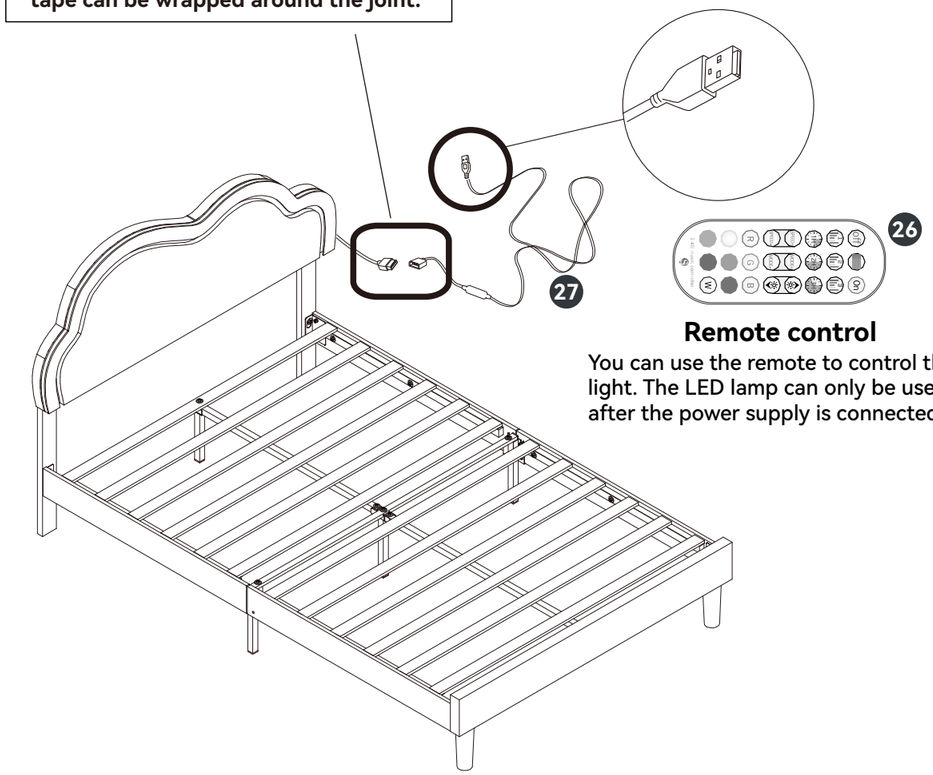

Remote control

You can use the remote to control the light. The LED lamp can only be used after the power supply is connected.

Step1:
Please make sure your phone has Bluetooth enabled.
Step2:
The LED light will automatically connect to the APP.

LED Strip Connection Instructions: Connect one end of Cable 27 to the headboard LED strip port, and connect the other end to the adapter, then plug it into a power source. For usage details, please refer to the LED strip manual.

Note:
The adapter is not included.