RESORT 500 WALL-HUNG

Cat. No.
4-106X

BARCLAY

Faucet Not Included

Mounting hardware

Width:	19-¾”
Depth:	18-⅛”
Height:	6-¼”

***Please do NOT drill hole without template or actual product.**

Interior Dimensions:

Basin interior:	15” X 11”
Basin depth:	5-¼”
Mount holes cc:	9-¼”
Back of basin to center of faucet:	2-¼”
Back of basin to center of drain:	8”
Faucet hole diameter:	1-⅜”

Features:

- ►Vitreous China
- ►Available with1-Hole (**4-1061**) or 8” widespread (**4-1068**)
- ►Pre-drilled overflow hole
- ►Mounting hardware included

Colors:

WH White

Compliance Certification
Meets or exceeds the following specifications: ASME A112.19.2 2013 and CSA B45.1-13 for plumbing fixtures.

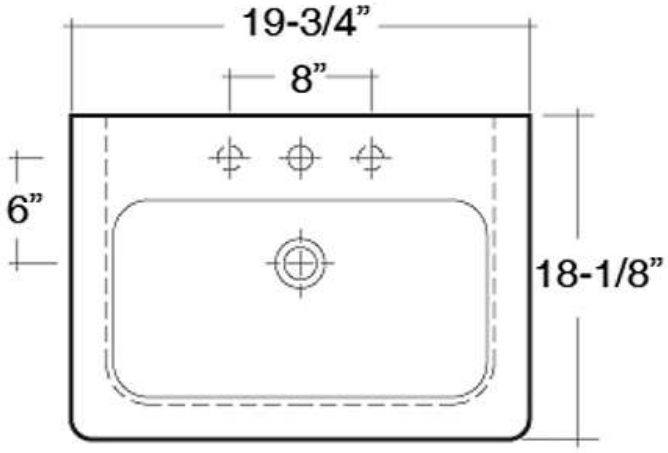

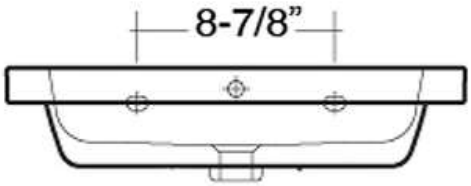

Dimensions of fixture are nominal and may vary within the range of tolerances established by ANSI Standard A112.19.2. Dimensions and specifications subject to change without notice.