ITEM NO.	PART NUMBER	DESCRIPTION	QTY.
1		Base	1
2		NECK	1
3		RING	1
4		LOWER BALL	1
5		NECK TUBE	1
6		RING SUPPORT	1
7		RING	1

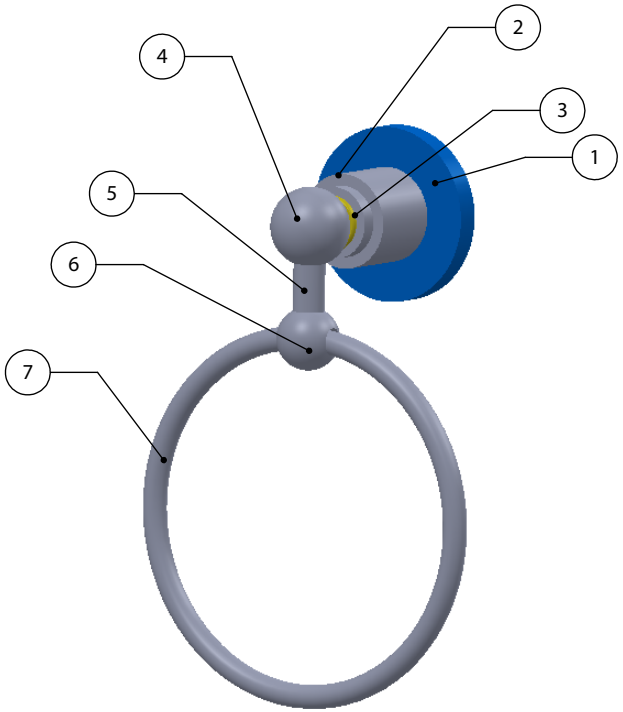

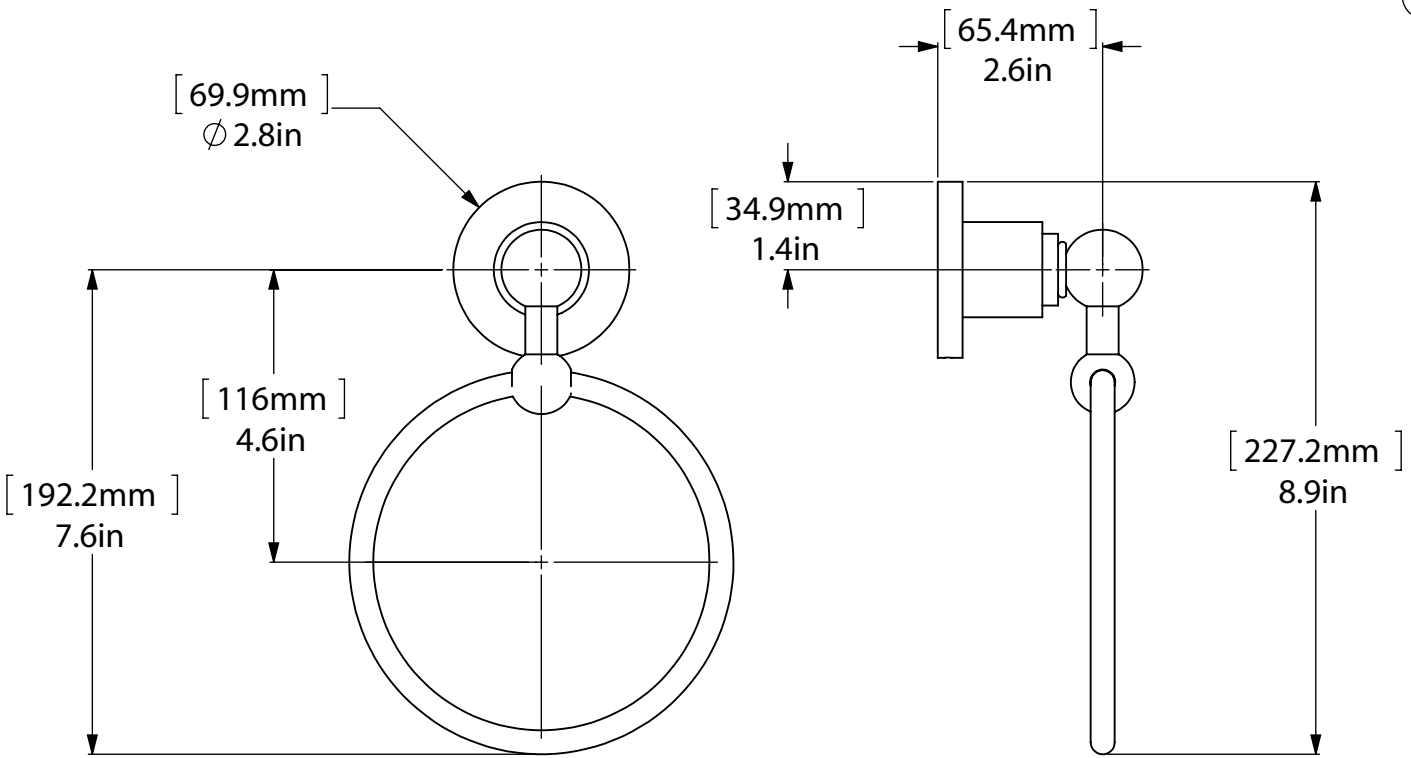

UNLESS OTHERWISE STATED				INITIALS	DATE	ITEM	QTY	DRG/PART NO	CLIENT:			
DO NOT SCALE DRAWING	X.XXX	+/-0.025	DESIGNED			MATERIAL	BRASS		WEIGHT		FINISH	TBD
CHAMFER ALL EDGES 0.5X45°	X.XX	+/-0.1	DRAWN			HEAT TREAT	NA				QUANTITY	
	X.X	+/-0.25	CHECKED			CUSTOMER			CUSTOMER No		---	
DRAWING ISO	X	+/-0.75	PROJ.ENG			DESCRIPTION:					DRAWING No.	REV
	ANGLES		SAFETY									0
	X.XX	+/-0.05°	APPROVED									
	X.X	+/-0.1°	FILENAME								SCALE 1:3	SHEET: 01 A4
	X	+/-0.5°										
FIRST ANGLE PROJECTION	MACHINED FINISH	3.2										