WILLOW COLLECTIONS
MADISON TEAK 36 IN. CENTER SINK BATHROOM VANITY

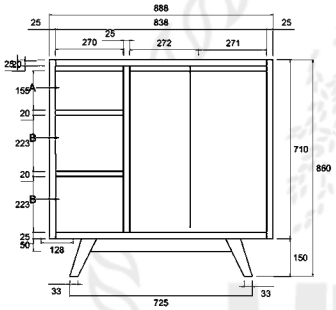

FRONT VIEW

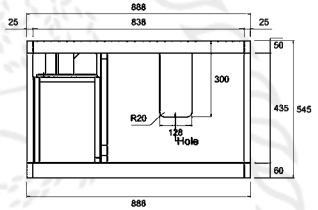
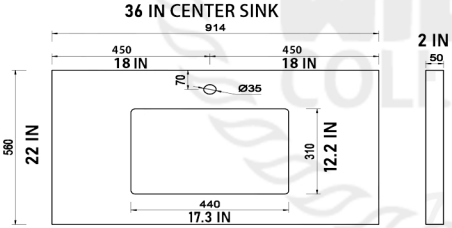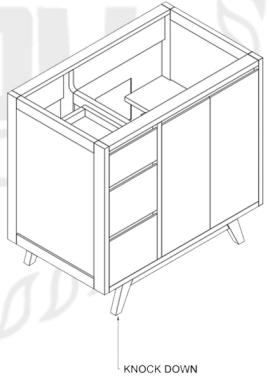
TOP VIEW