3-Piece Bistro Set

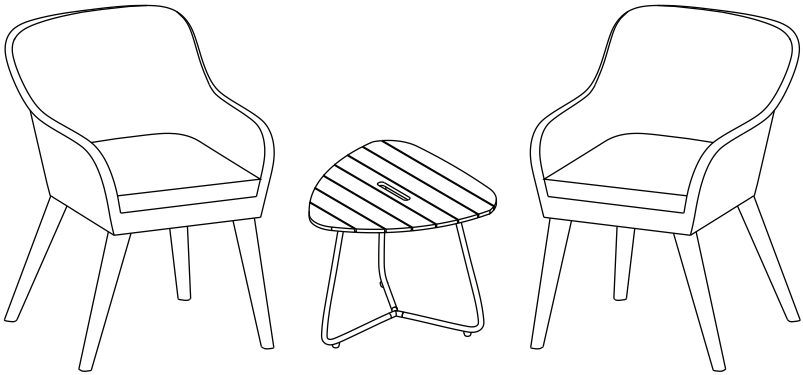



IMPORTANT, RETAIN FOR FUTURE REFERENCE: READ CAREFULLY.

Safety

- ☑ For domestic use only.
- ☑ Always use on firm level ground.
- ☑ Don't tighten all the bolts before the product is fully assembled.
- ☑ It would be useful to ask someone to help you assemble the product.
- ☑ Periodic structural checks of this product should be undertaken, do not use if you have any doubts about its fitness for purpose.
- ☑ Do not stand on the seat.
- ☑ Do not seat on the table.
- ☑ Do not let children play with this product.
- ☑ Maximum load per seat: 250 lbs.

At the beginning of the season

- ☑ Check to ensure that all components and fixings of this product are secure, do not use if you have any doubts about its fitness for purpose.

At the end of the season

- ☑ This product should be stored under cover during prolonged spells of adverse weather (wet or cold) and also during the winter (ideally in a garden shed or garage).
- ☑ Always clean and dry thoroughly before storage.

Tips for Cushions

In order to compress the package, we put the cushions in the gap of some parts. So there may be crinkle on the fabric. Don’t worry. Just flap every corner of the cushion evenly and it will get back into its original shape soon.

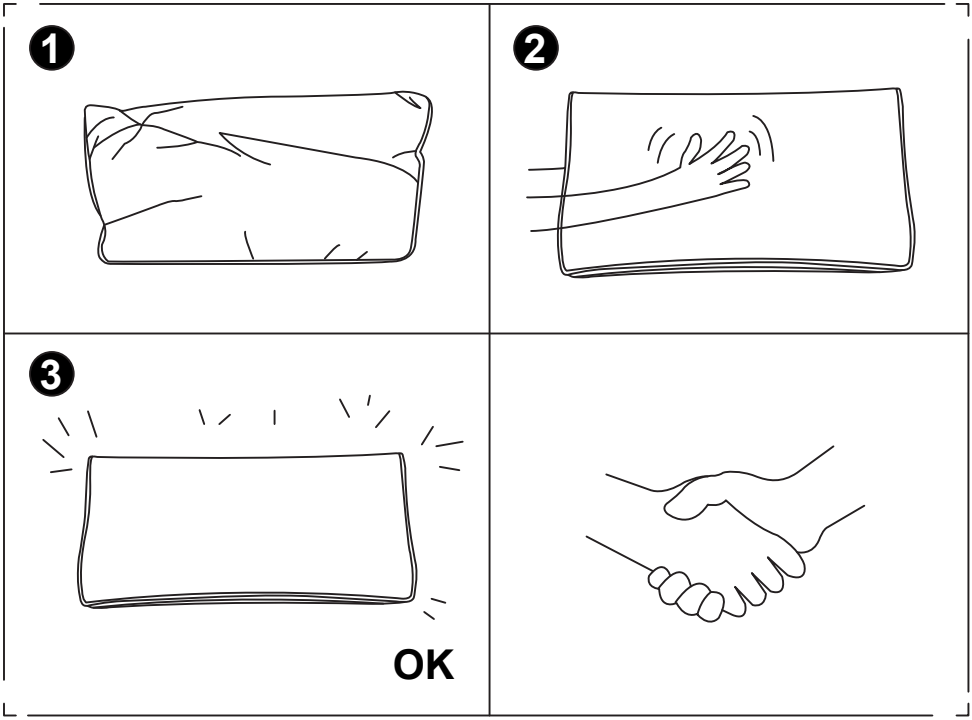

COMPONENT LIST - CHAIR *2

Item no.	Reference Image	Description	Qty.
A		Chair Seat	1
B		Chair Leg	1
C	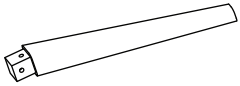	Chair Leg	1
D	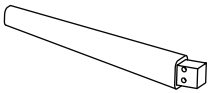	Chair Leg	2
E	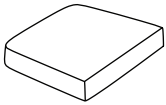	Cushion	1
R		M6X20 Head Cap Screws	8
Z		Washer	8
T		Screw Driver	1

NOTE:
Do NOT tighten any screws fully first until you have tightened all the screws.
This may cause the frame to warp.
If there is still wobbles or screw holes cannot be aligned, loosen the screws and tighten sequentially.
If the Chair is not stable it could lead to damage to the product.

1

Attach the Chair Legs (B) & (C) to the Chair Seat (A) by securing with M6*20 Head Cap Screws (R) and Washers (Z). Do this in 2 places.

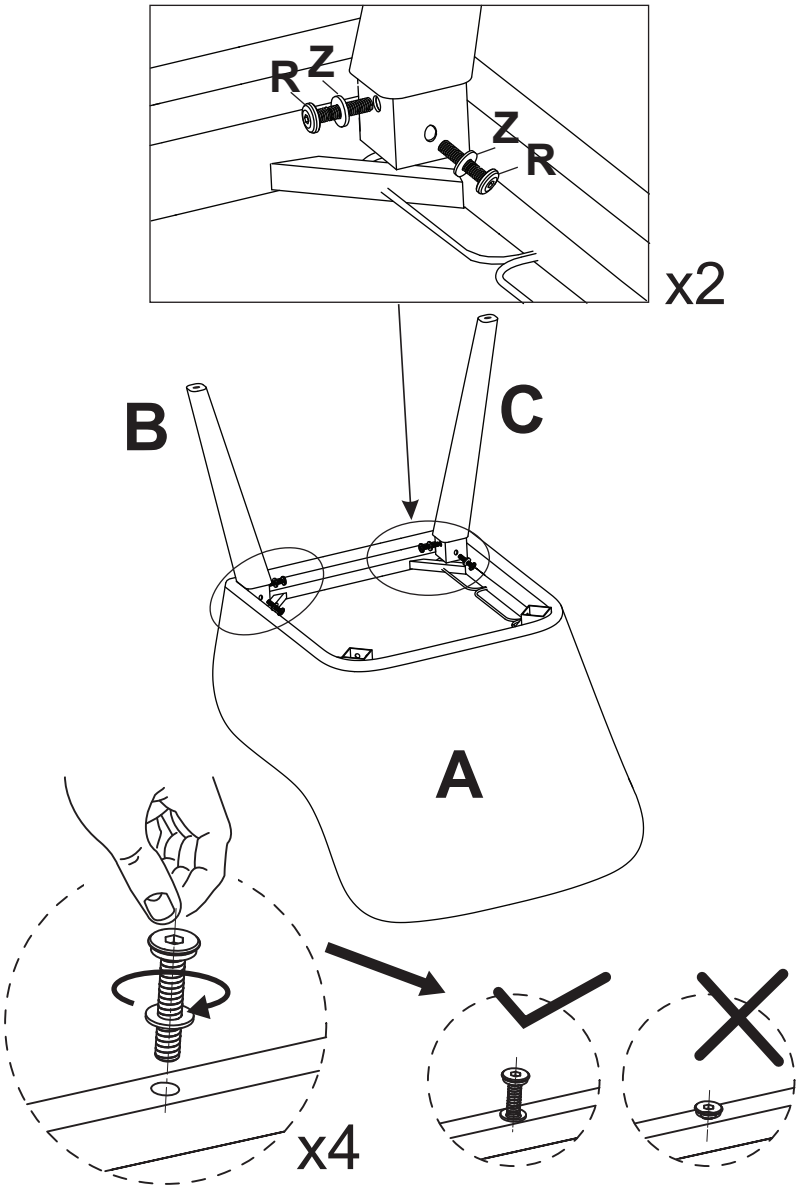

NOTE:DO NOT TIGHTEN THE SCREWS COMPLETELY.

2

Attach the Chair Legs (D) to the Chair Seat (A) by securing with M6*20 Head Cap Screws (R) and Washers (Z). Do this in 2 places.

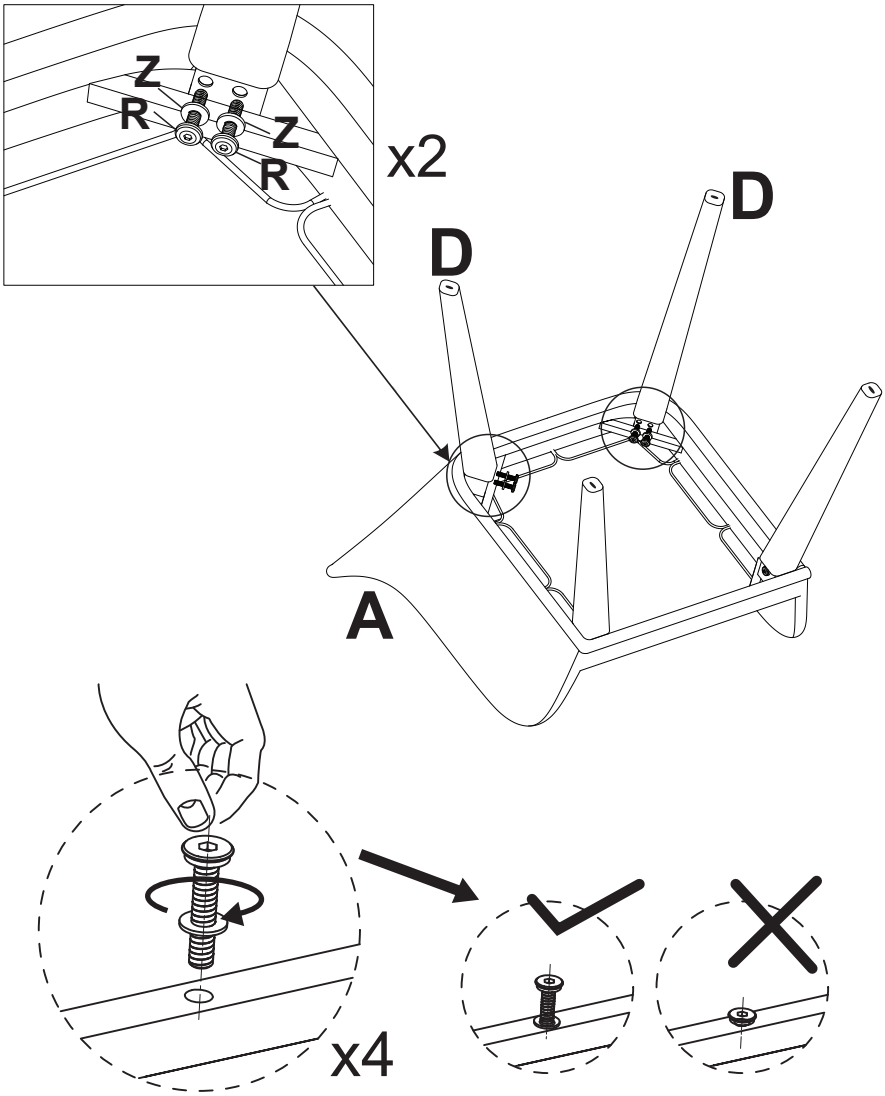

NOTE:DO NOT TIGHTEN THE SCREWS COMPLETELY.

3

Tighten all 8 Screws into place with Allen Key (T).

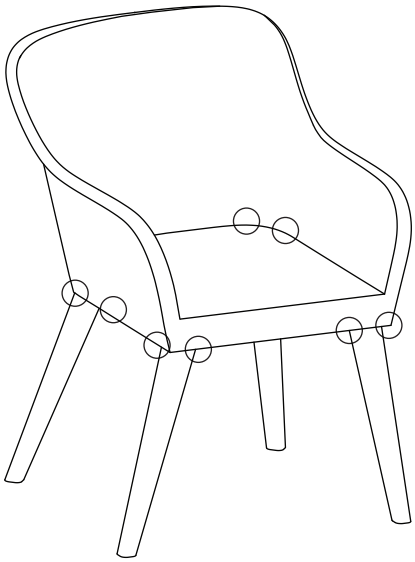

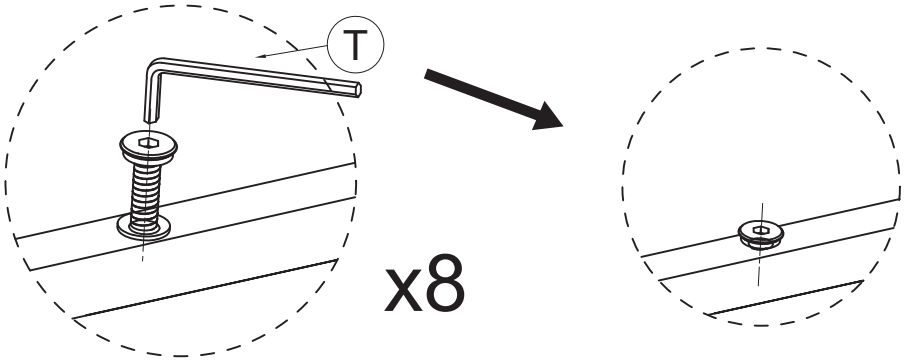

NOTE:IF ANY SCREW HOLES CANNOT BE ALIGNED, LOOSEN ALL THE SCREWS AND GO BACK STEP 1 AND RESTART ASSEMBLY.

4

Place the chair on a level surface, and put Seat Cushion (E) on the chair. Now your chair is ready for use.

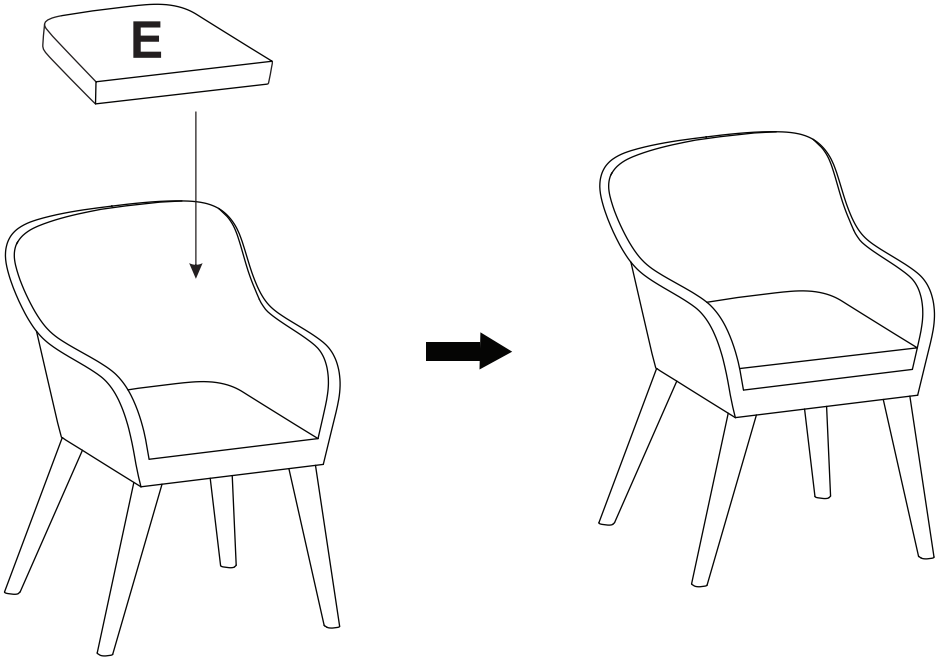

COMPONENT LIST - TABLE

Item no.	Reference Image	Description	Qty.
K	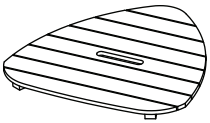	Table Top	1
L		Table Leg	3
O		Connector	1
T		Allen Key	1
M		Screw	9

NOTE:
Do NOT tighten any screws fully first until you have tightened all the screws.
This may cause the frame to warp.
If there is still wobbles or screw holes cannot be aligned, loosen the screws and tighten sequentially.
If the Table is not stable it could lead to damage to the product.

1

Insert the Table Legs (L) into the Connector (O). Do this in 3 places.

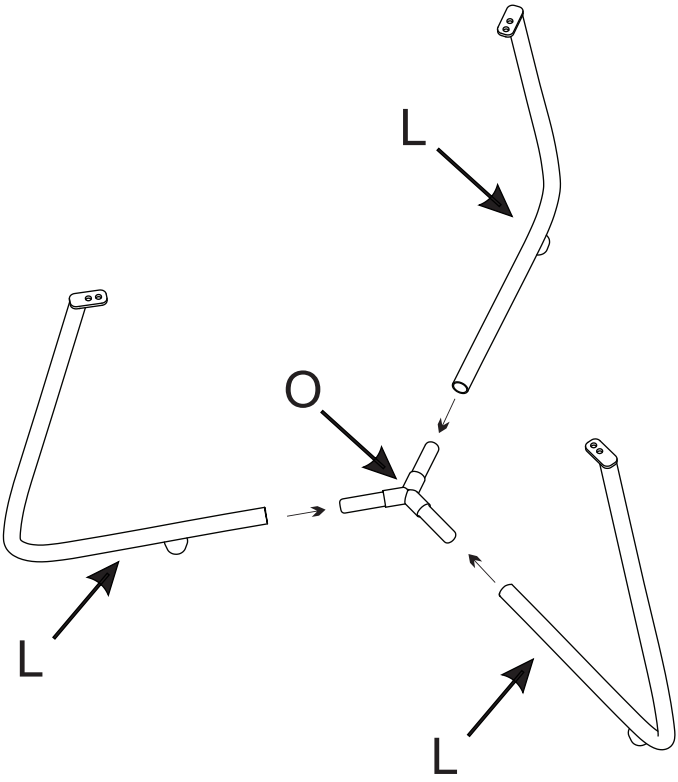

2

Attach the Table Legs (L) to the Connector (O) by securing with Screws (M) and Allen Key (T). Do this in 3 places.

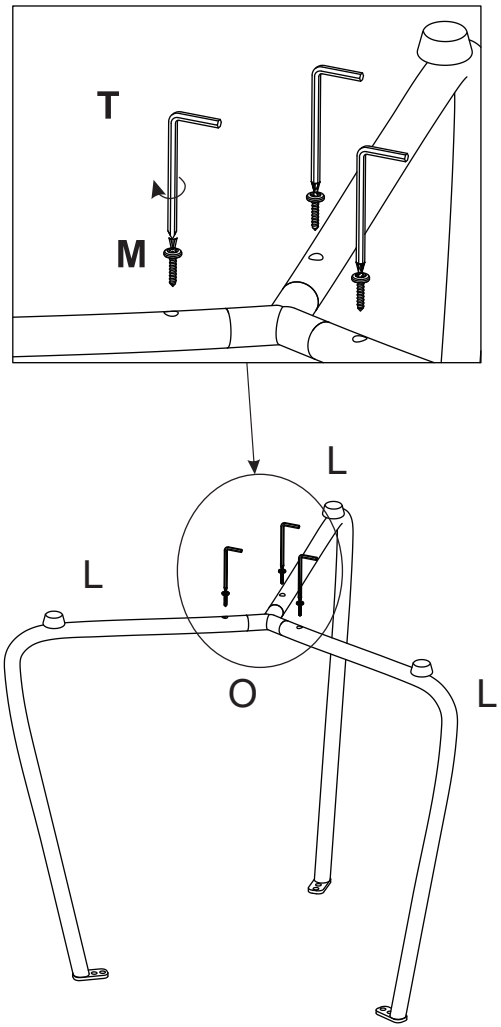

3

Attach the Table Legs (L) to the Table Top (K) by securing with Screws (M) and Allen Key (T). Do this in 3 places.

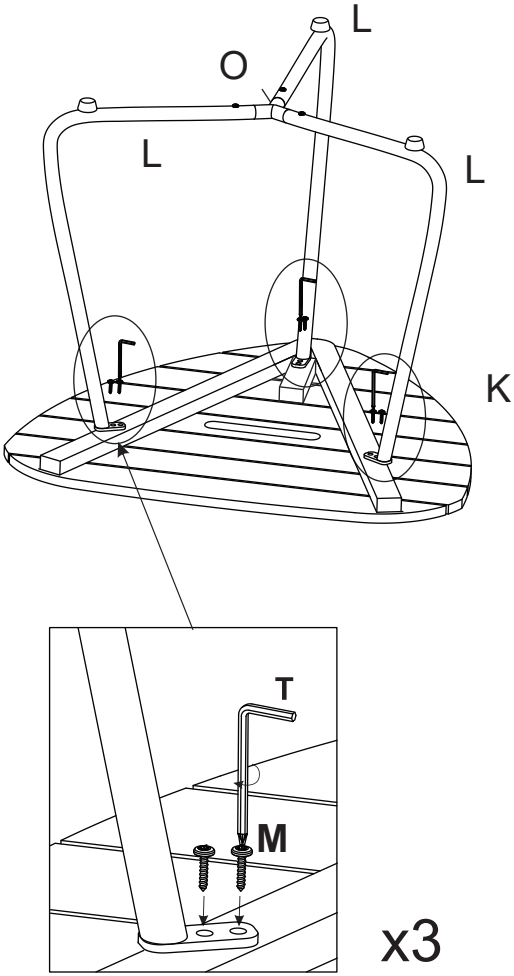

4

Turn the table over and place on a flat surface. Your Table is ready for use.

