

X 2

Owner Manual

Sofa Couch

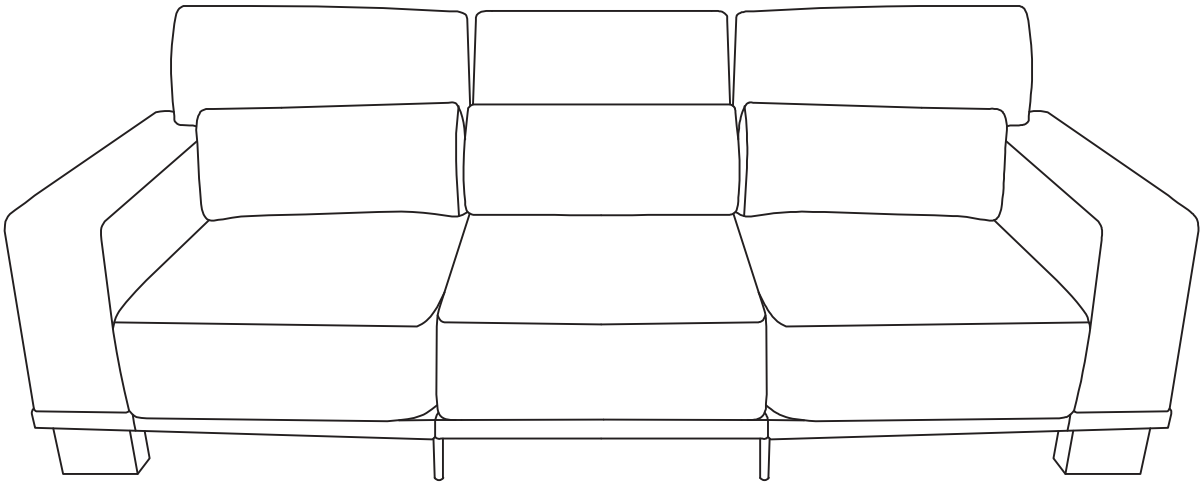

HELP CENTER

Have questions about this product? Contact us, and we'll assist you!

* Upon receiving your email, we'll respond within **48** working hours.

CENTRO DE AYUDA

¿Tienes preguntas sobre tu producto? Ponte en contacto con nosotros y te ayudaremos.

*Al recibir tu correo electrónico, te responderemos en un plazo de **48** horas laborables.

FAQ

Q1: What should I do if the product I received is damaged or incorrect?
A1: If you've received a damaged, incorrect, or incomplete product, please reach out to our Customer Support Center. Include your order number and photos

Q2: What should I do if I encounter problems during installation?
A2: If you encounter any installation issues, please attach a
detailed description of the problem, we will provide you for professional technical support.

Q3: How do I apply a return?
A3: You can initiate a return within 30 days of purchase. Email us
with your order number and the reason for return. We'll guide you through the process.

Note:
- Please contact us before returning the product to avoid any complications.
- Ensure the product is returned in its original packaging with all accessories included.

PREGUNTAS FRECUENTES

P1: ¿Qué debo hacer si el producto que he recibido está dañado o es incorrecto?
R1: Si has recibido un producto dañado, incorrecto o incompleto, ponte en contacto con nuestro Centro de Atención al Cliente . Incluye tu número de pedido y fotos
que documenten el problema para que podamos ayudarte con la devolución o el cambio.

P2: ¿Qué debo hacer si encuentro problemas durante la instalación?
R2: Si tienes algún problema durante la instalación, por favor envía un correo electrónico adjuntando una descripción detallada del problema.
Te proporcionaremos soporte técnico profesional.

P3: ¿Cómo puedo solicitar una devolución?
R3: Puede iniciar una devolución en los 30 días siguientes a la compra. Envíenos un correo electrónico con su número de pedido y el motivo de la devolución.
Te guiaremos a través del proceso.

Nota:
- Póngase en contacto con nosotros antes de devolver el producto para evitar complicaciones.
- Asegúrate de devolver el producto en su embalaje original y con todos los accesorios incluidos.

Product Guide and Maintenance Instructions

EN

Thank you for purchasing our product! To ensure a smooth installation and optimal user experience, we recommend that you carefully read the following guide and instructions before starting.

Assembly Instructions:

● Before installation, inspect all parts and accessories to confirm that none are damaged or missing. If any issues are found, please contact us promptly.

● Assemble the product in a spacious and flat area to ensure sufficient space for moving parts, avoid accidental collisions, and facilitate the assembly process.

● It is advisable to refer to the schematic diagrams during assembly to make the process easier. Align all screws with the corresponding pre-drilled holes, then tighten each screw one by one after all parts are correctly positioned.

● When tightening screws during assembly, pay attention to the force applied. If any parts are damaged, please contact us promptly.

Safety Warnings:

● **Child Safety**

Keep small parts out of reach of children during assembly. Do not allow children to climb on or play with the product to prevent serious injuries from tipping.

Usage Restrictions:

● Do not stand on or jump on the sofa.

● Avoid placing sharp objects on the sofa to prevent material damage.

Product Usage:

● This product is intended for indoor use only. We are not responsible for any damage caused by unintended use or modifications.

Product Maintenance:

● Environmental Conditions

Keep the product away from direct sunlight, rain, and damp areas to prevent fading or deformation. Also, keep it away from sharp objects and corrosive substances to protect the sofa's surface.

By following these guidelines, you can enjoy a safe and pleasant product experience. Thank you for choosing our product!

Guía del Producto e Instrucciones de Mantenimiento

ES

¡Gracias por adquirir nuestro producto! Para garantizar una instalación sencilla y la mejor experiencia de uso, le recomendamos que lea atentamente esta guía antes de comenzar.

Instrucciones de Montaje:

● Antes de instalar, revise todas las piezas y accesorios para confirmar que no hay daños ni faltantes. Si detecta algún problema, contacte con nosotros de inmediato.

● Monte el producto en una zona amplia y plana, con espacio suficiente para manipular las piezas, evitar golpes accidentales y facilitar el ensamblaje.

● Es recomendable seguir los diagramas durante el montaje. Alinee todos los tornillos con los agujeros pretaladrados correspondientes y apriételos uno a uno una vez que todas las piezas estén correctamente colocadas.

● Al apretar los tornillos, controle la fuerza aplicada. Si alguna pieza se daña, contáctenos sin demora.

Advertencias de Seguridad:

● **Seguridad infantil:**

● Mantenga las piezas pequeñas fuera del alcance de los niños durante el montaje.

● No permita que los niños se suban o jueguen con el producto para evitar lesiones graves por vuelcos.

Restricciones de Uso:

● No se ponga de pie ni salte sobre el sofá.

● Evite colocar objetos afilados en el sofá para no dañar los materiales.

Uso del Producto:

● Este producto está diseñado **solo para uso en interiores**. No nos hacemos responsables de daños causados por usos inadecuados o modificaciones.

Mantenimiento del Producto:

● **Condiciones ambientales:**

●Mantenga el producto alejado de la luz solar directa, la lluvia y la humedad para evitar decoloraciones o deformaciones.Protéjalo de objetos punzantes y sustancias corrosivas para conservar su superficie.

Siguiendo estas indicaciones, disfrutará de una experiencia segura y satisfactoria. ¡Gracias por elegirnos!

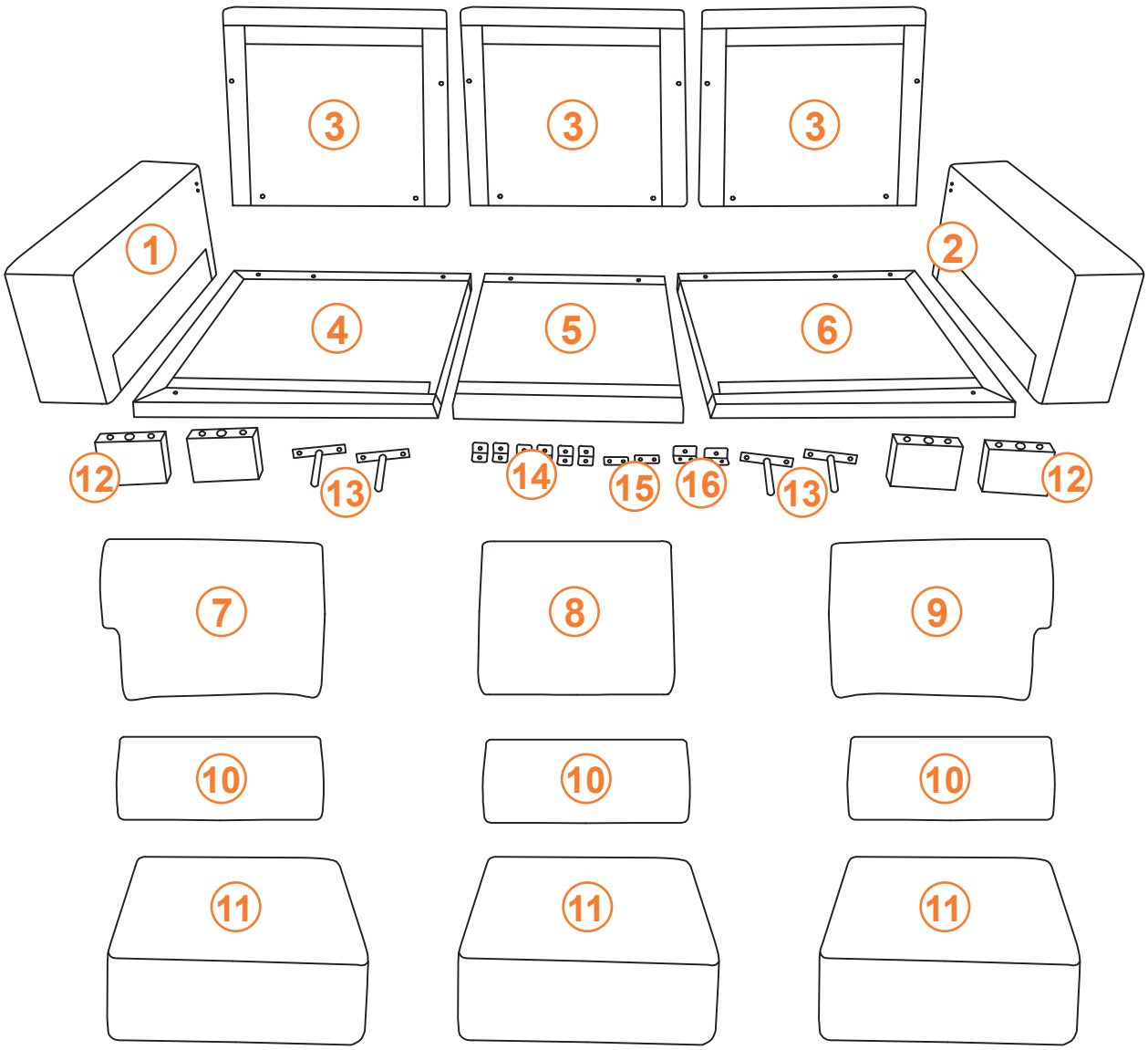
3
3
3
1
2
4
5
6
12
13
14
15
16
13
12
7
8
9
10
10
10
11
11
11

BOX 1

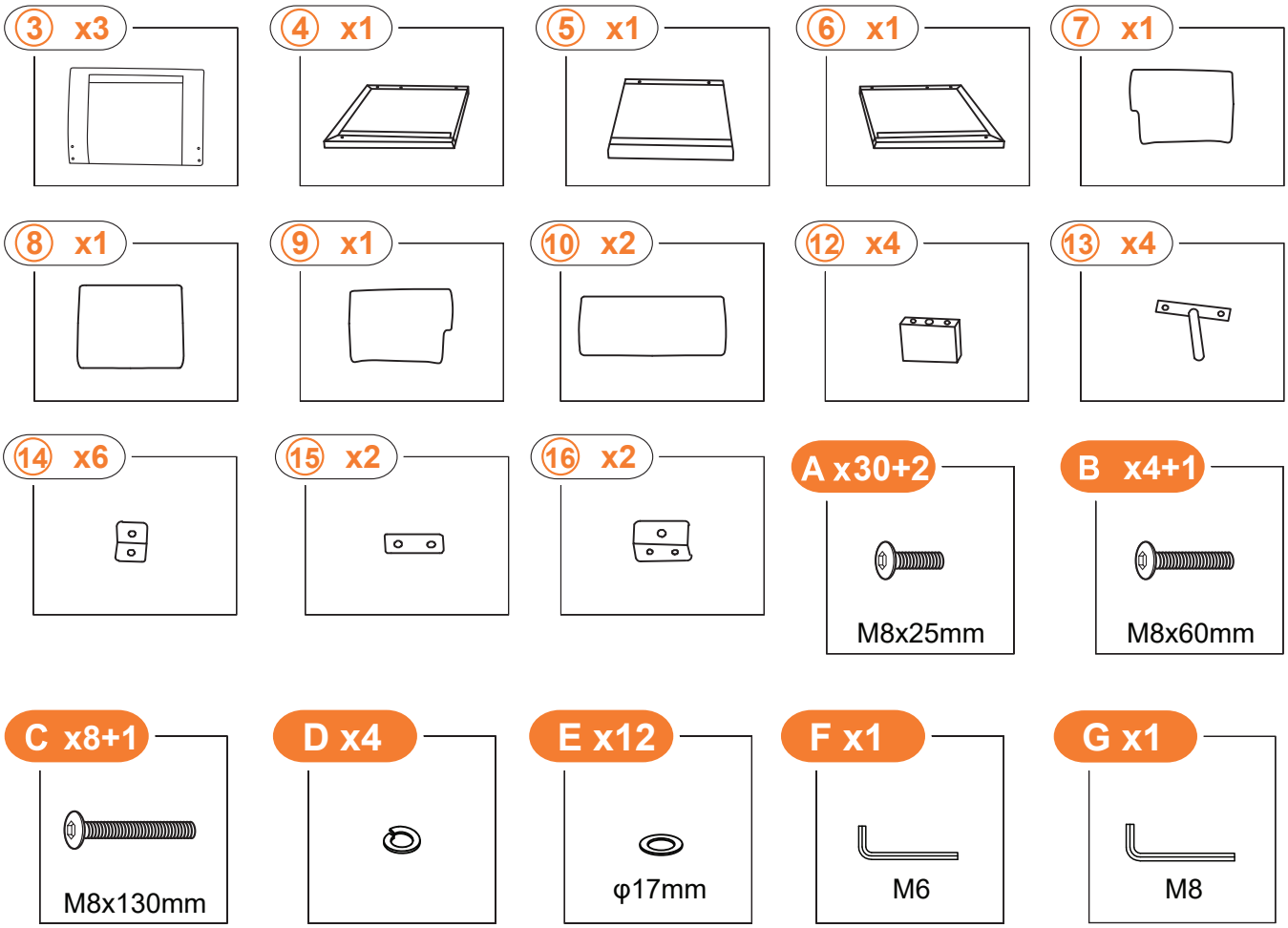

Thank you for purchasing this item, please read this instruction guide carefully before assembly and keep it for future reference.

This Package

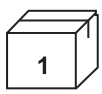

BOX 1

Another Package

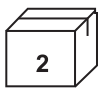

BOX 2

ATTENTION: Your sofa is shipped in TWO Boxes. Boxes may arrive separately. DO NOT OPEN until both boxes are received.

ATTENTION 2 : The cushions are vacuum sealed, so the foam of cushions will take 24 hours to be fully expanded.

BOX 2

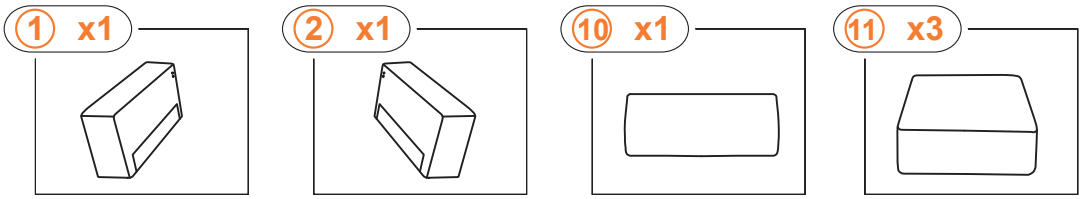

Thank you for purchasing this item, please read this instruction guide carefully before assembly and keep it for future reference.

This Package

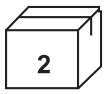

BOX 2

Another Package

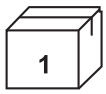

BOX 1

ATTENTION: Your sofa is shipped in TWO Boxes. Boxes may arrive separately. DO NOT OPEN until both boxes are received.

ATTENTION 2 : The cushions are vacuum sealed, so the foam of cushions will take 24 hours to be fully expanded.

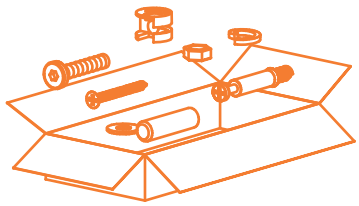

A x30+2

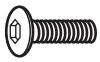

M8x25mm

B x4+1



M8x60mm

C x8+1



M8x130mm

D x4



E x12



φ17mm

F x1



M6

G x1



M8

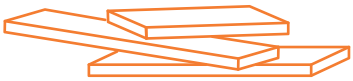

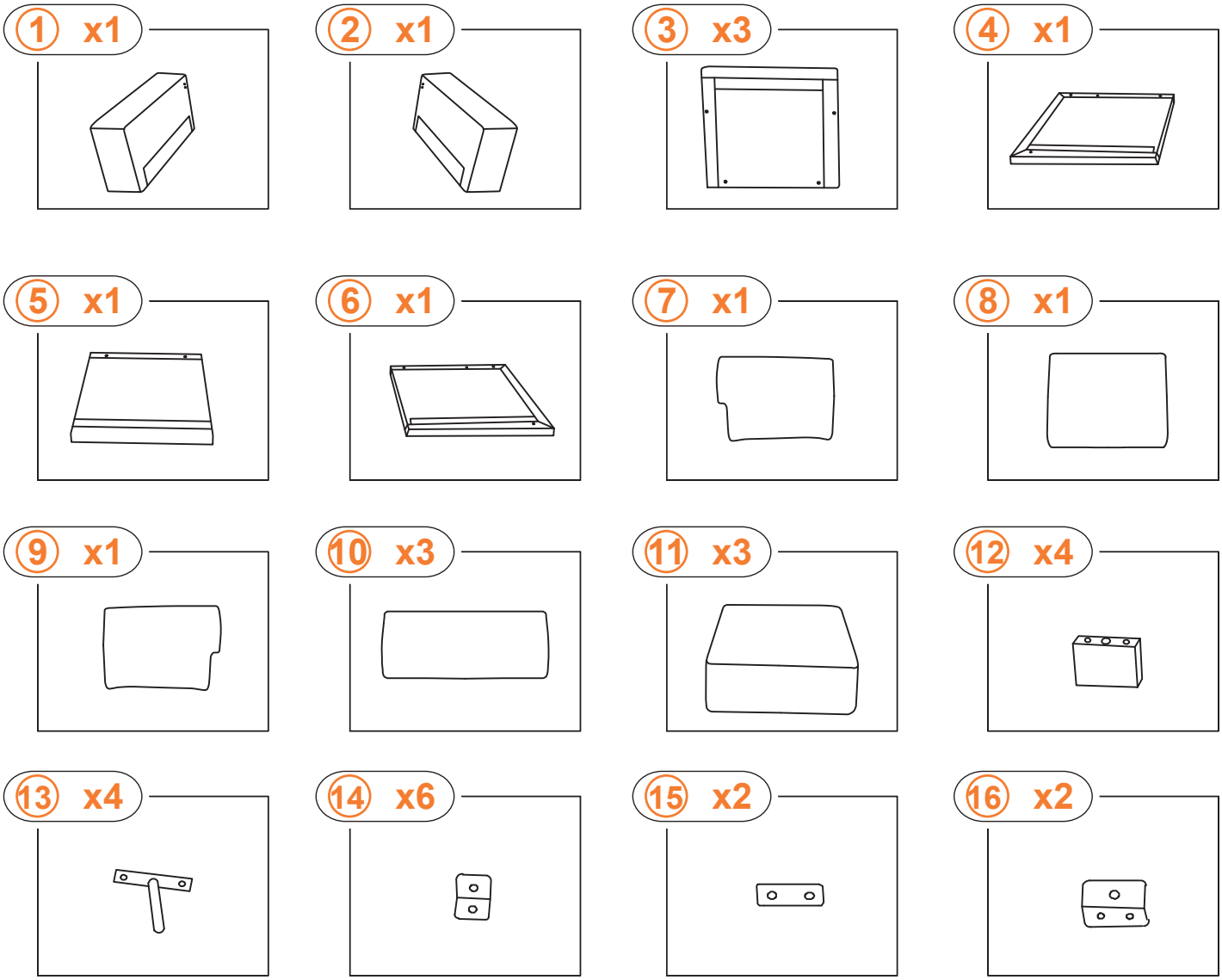
1 x1
2 x1
3 x3
4 x1
5 x1
6 x1
7 x1
8 x1
9 x1
10 x3
11 x3
12 x4
13 x4
14 x6
15 x2
16 x2

1

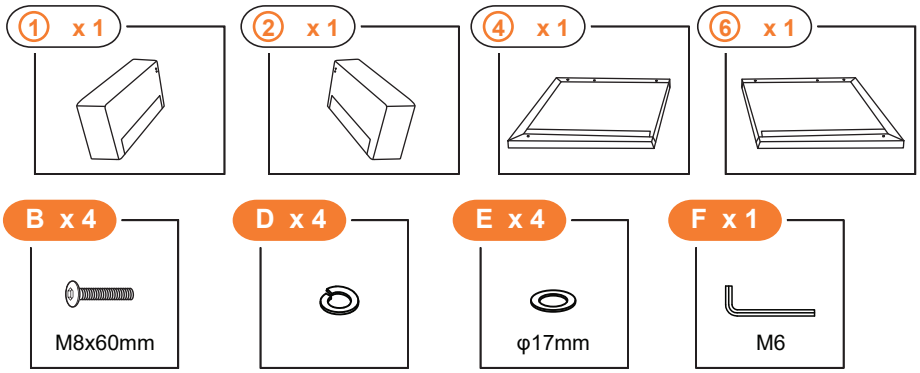

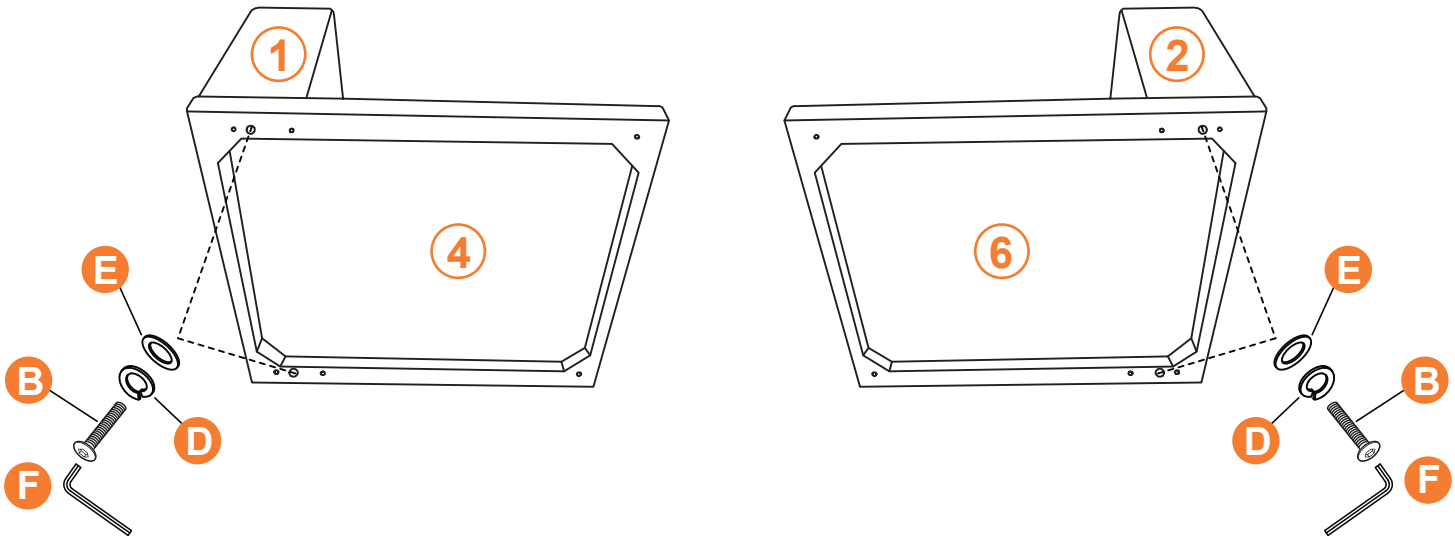

Make sure all the screws are in their holes before tightening any of them

2

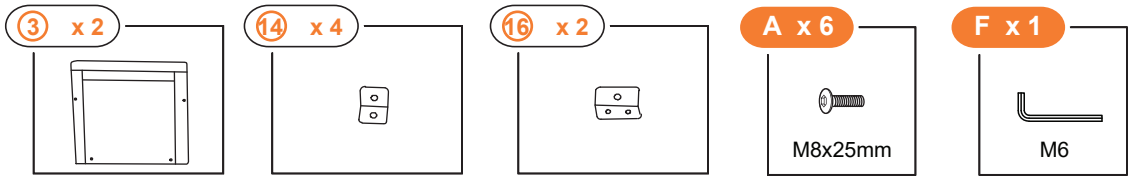

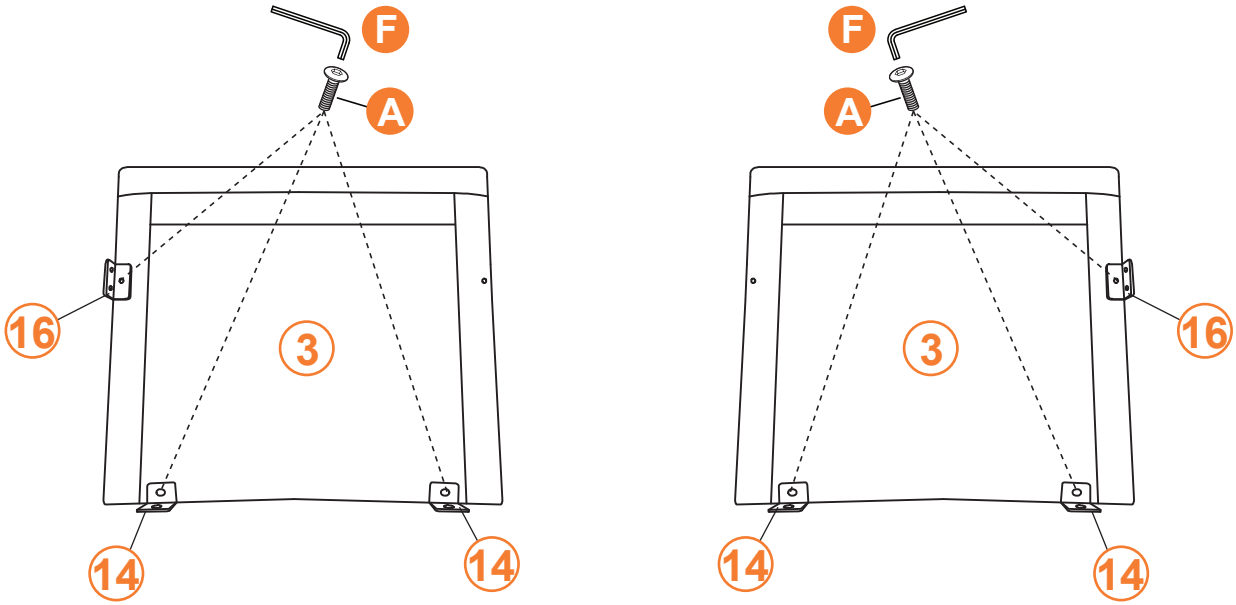

Make sure all the screws are in their holes before tightening any of them

3

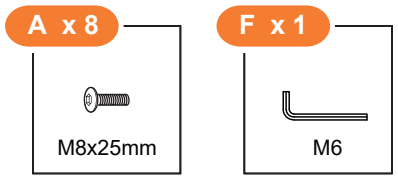

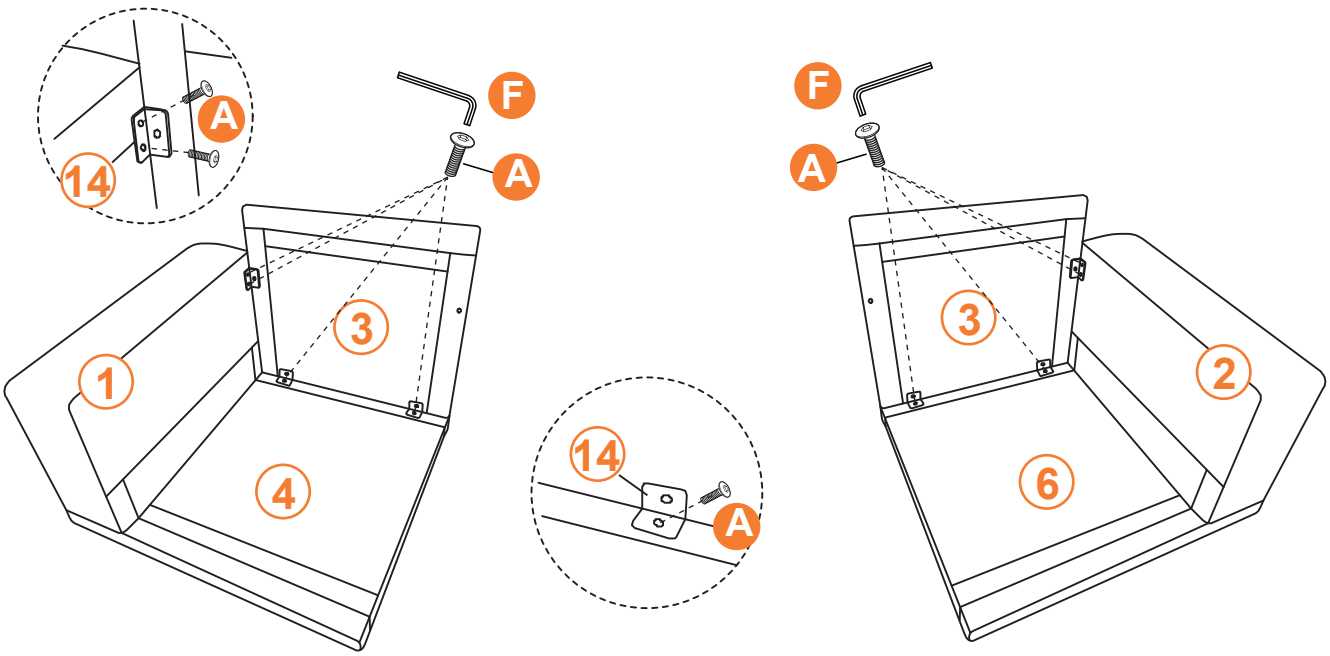

Make sure all the screws are in their holes before tightening any of them

4

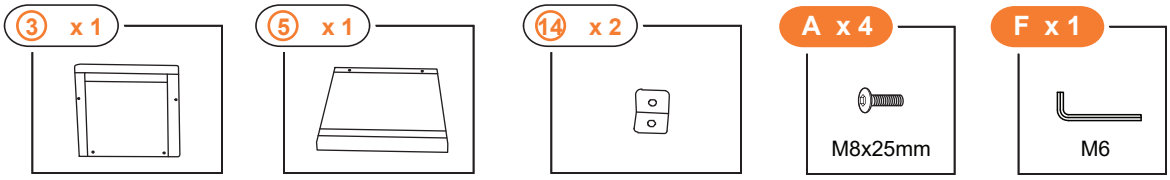

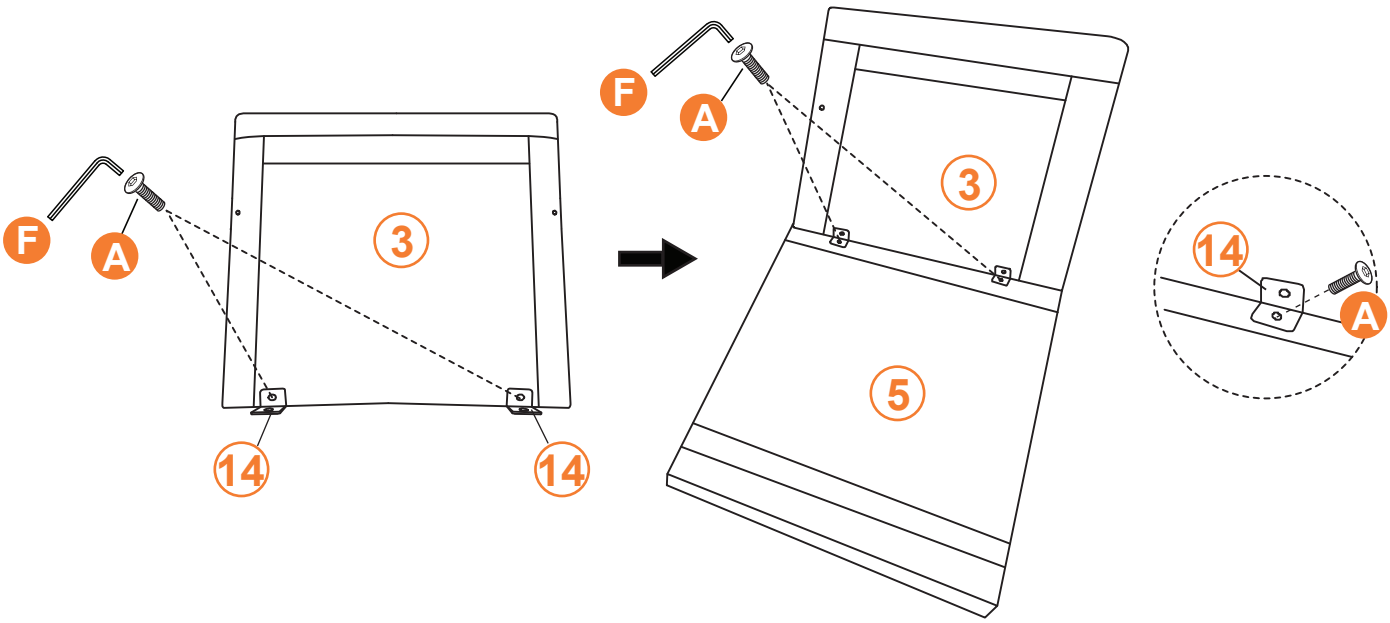

Make sure all the screws are in their holes before tightening any of them

5

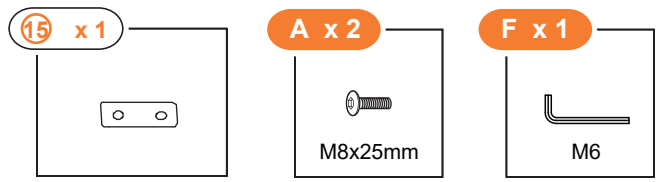

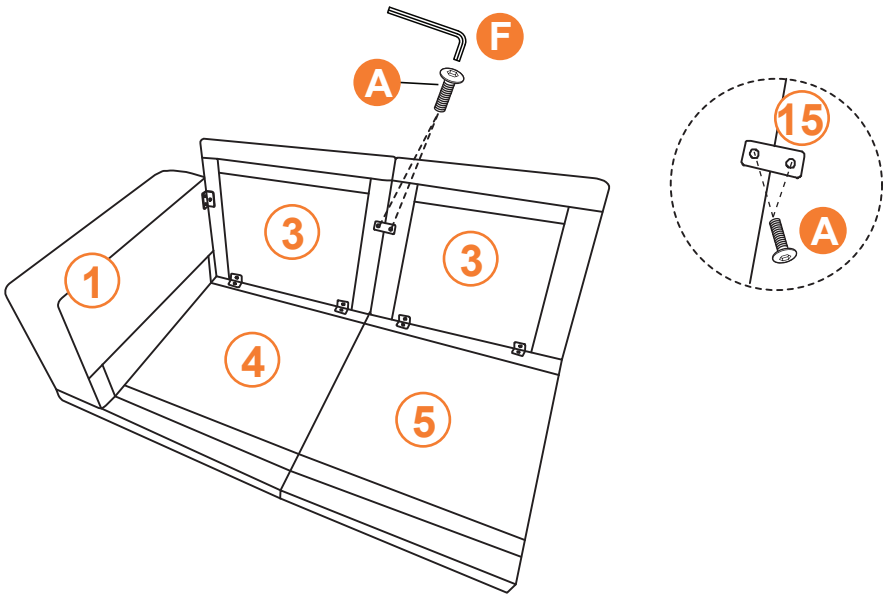

Make sure all the screws are in their holes before tightening any of them

6

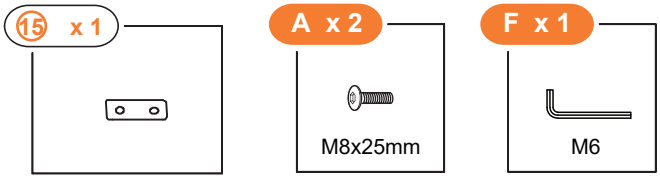

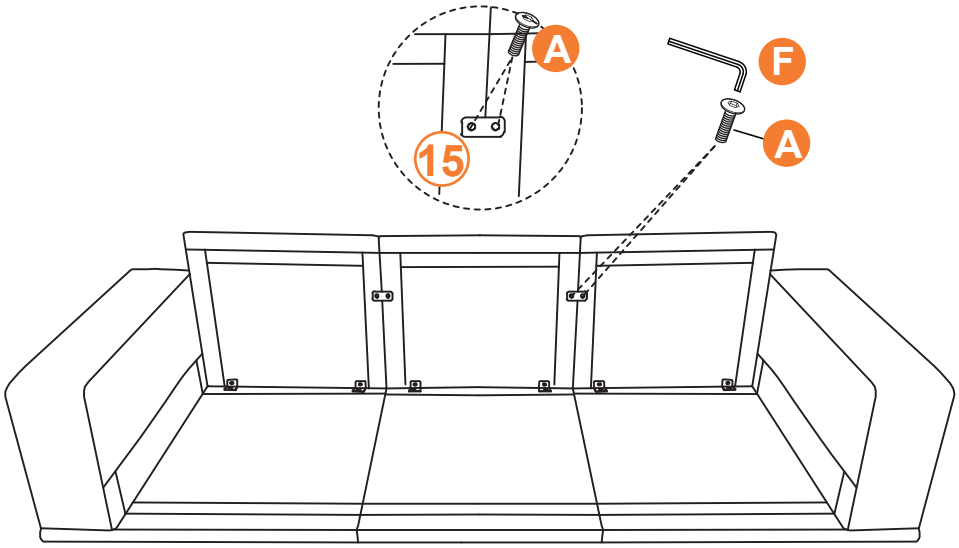

Make sure all the screws are in their holes before tightening any of them

7

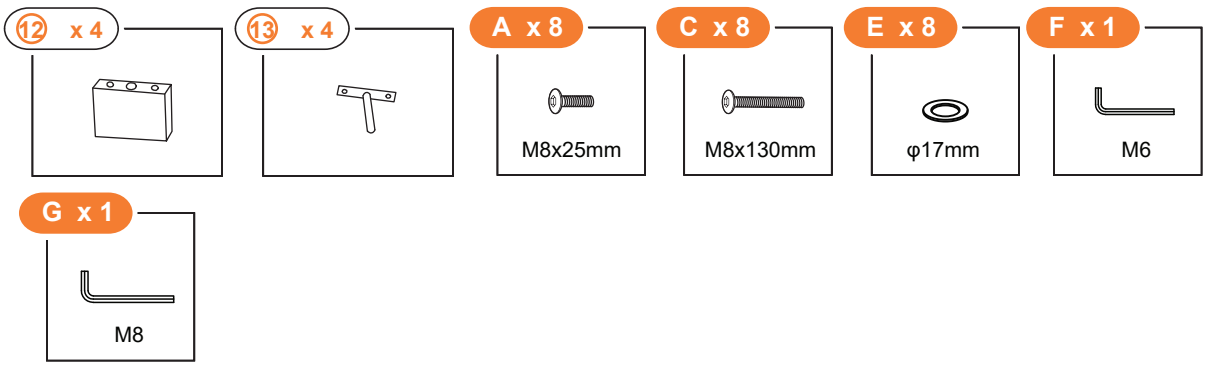

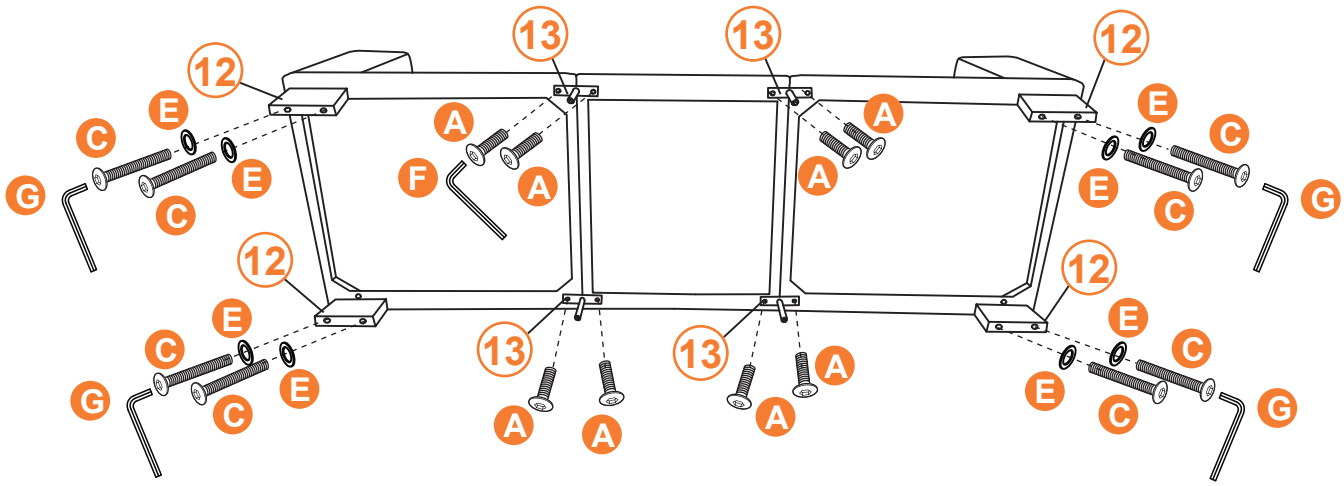

Make sure all the screws are in their holes before tightening any of them

8

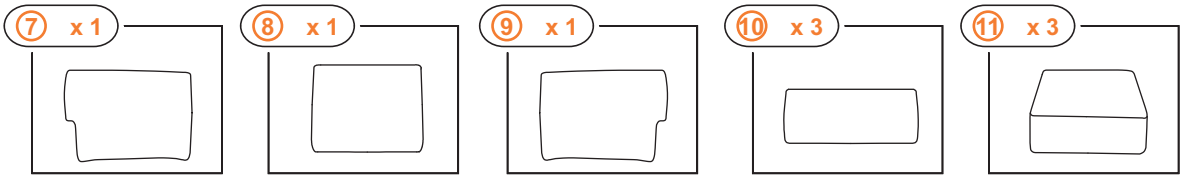

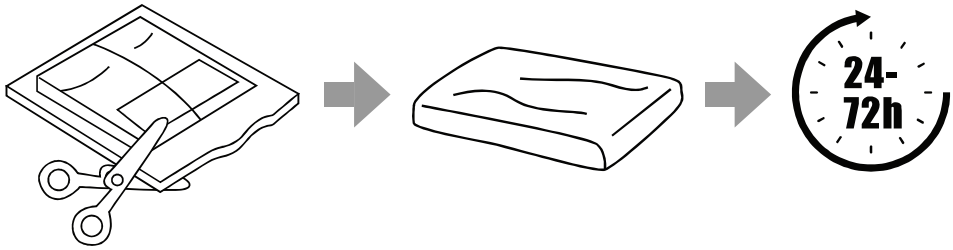

The foam of cushions will take 24-72 hours to be fully expanded.

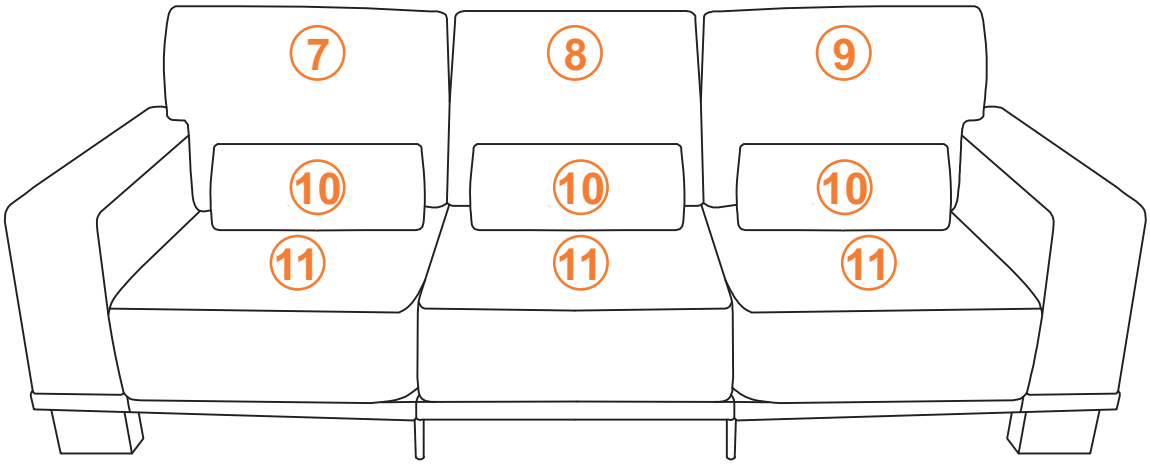

9

