3 Loosen the guide rope adjuster to the bottom of the guide rope, then insert the ground stakes on the ground, and then tighten the net by pulling up the guide rope adjuster. Make sure the net is stable.

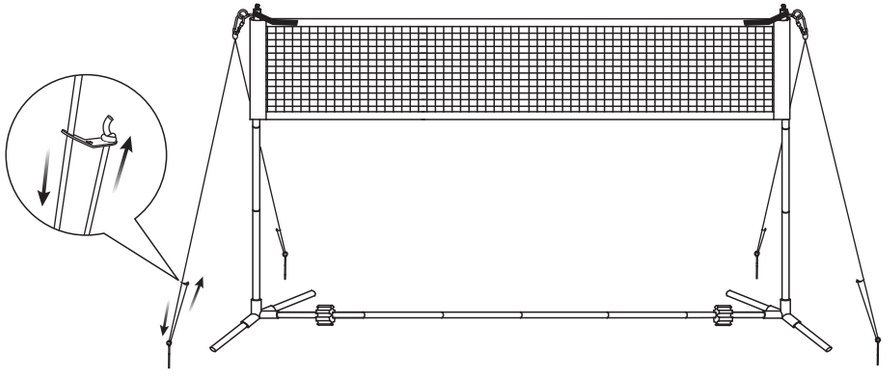

4 Adjust the net to play volleyball, badminton, and football on the lawn.



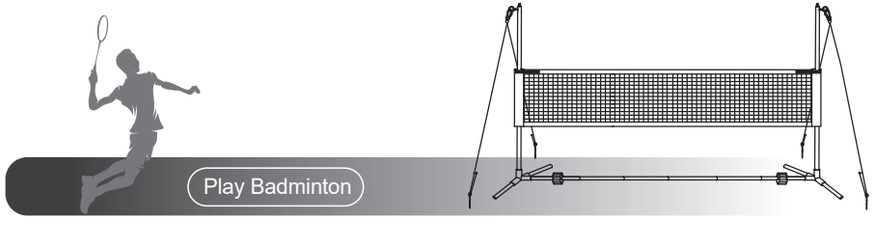



PATIASSY

Badminton Set

User manual



ASSEMBLY VIDEO

Carefully follow all directions. Scan the QR code to watch the installation guide.

WARNING!

Adult assembly required.
CHOKING HAZARD - This item contains small parts.
Not suitable for children under 3 years.

Email: customer_service@patiassy.com

ASSEMBLY INSTRUCTIONS

PART LIST

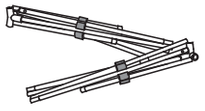 1PC	 1PC	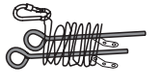 2PCS
 4PCS	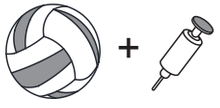 1PC	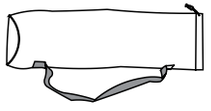 1PC
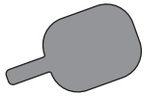 4PCS	 4PC	 2PC

INSTALLATION INSTRUCTIONS

1 Assemble the set on a smooth and flat surface. Expand the folded frame, and connect the 2 adjacent tubes. Assemble the bottom bracket, and then connect the side pipes. (Don’t need to connect the top tubes on both sides yet)

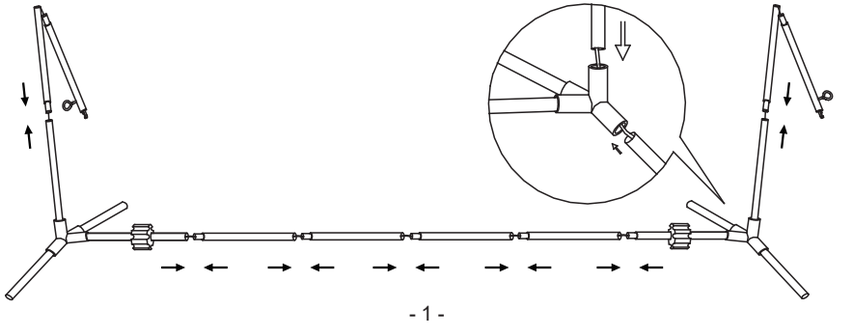

2 Insert the net to the top tubes, and adjust the tightness through the hooks & loops on both sides of the net. Hang the guide ropes with carabiner on the eyebolts, and then connect the top tubes on both sides.

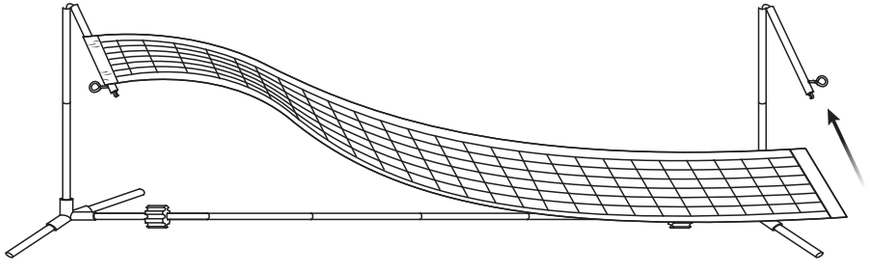

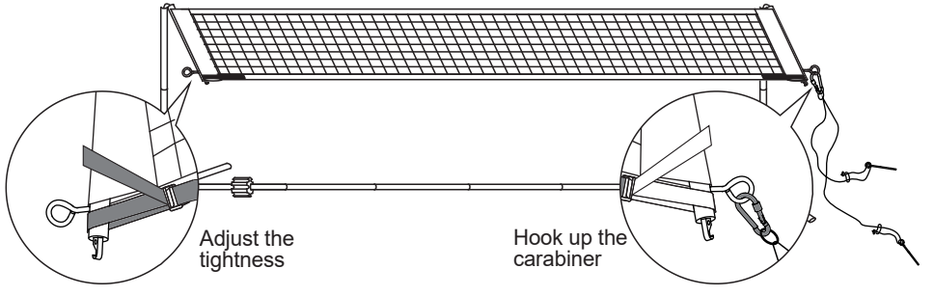

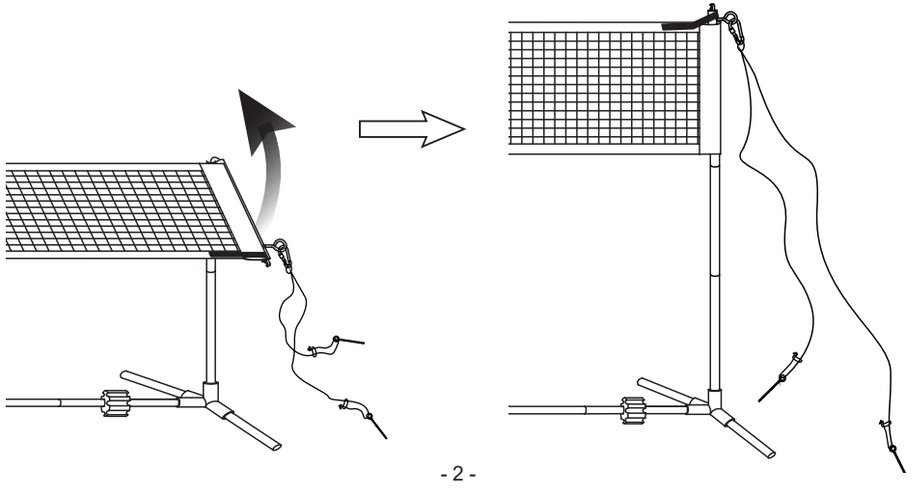

JI0402

ASSEMBLY VIDEO

Carefully follow all directions. Scan the QR code to watch the installation guide.