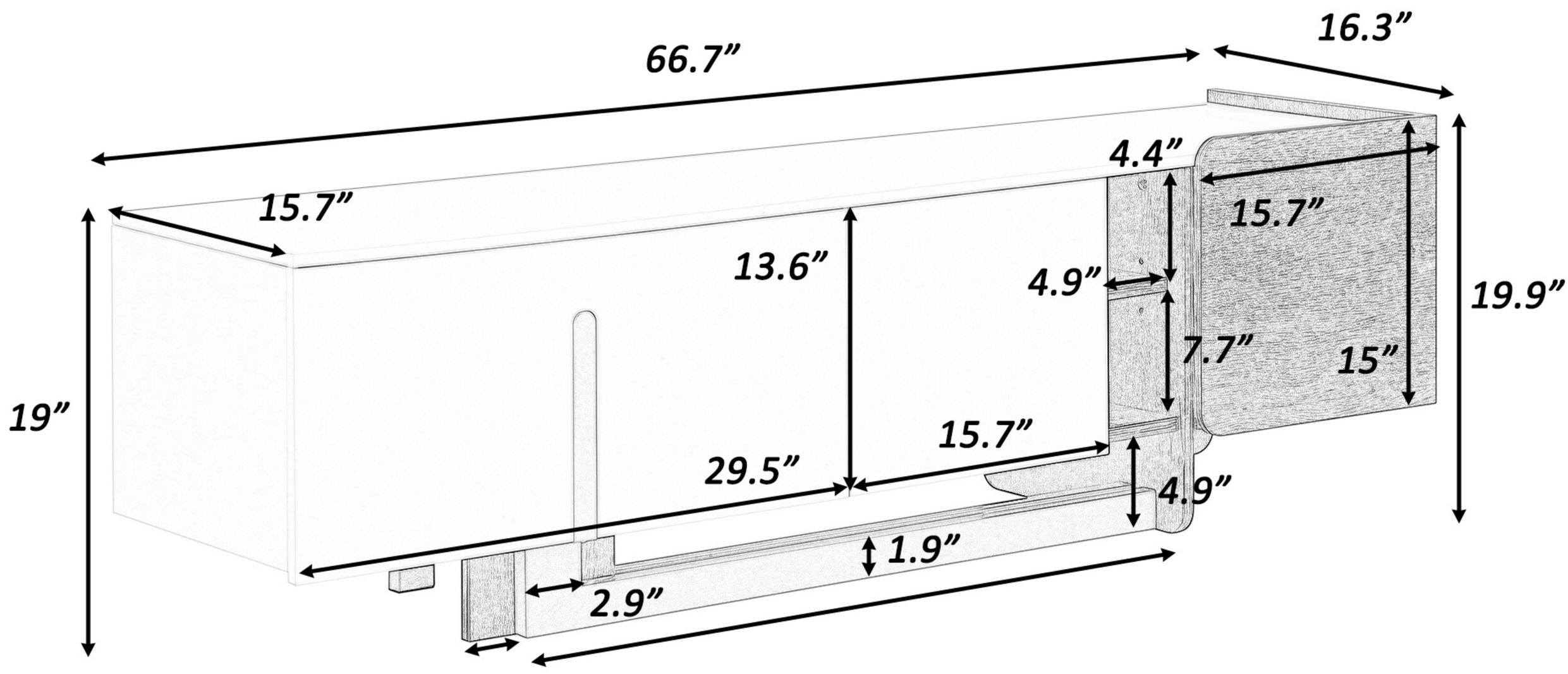Product Size: