ASSEMBLY INSTRUCTIONS
16 INCH BATH VANITY (COMBO)

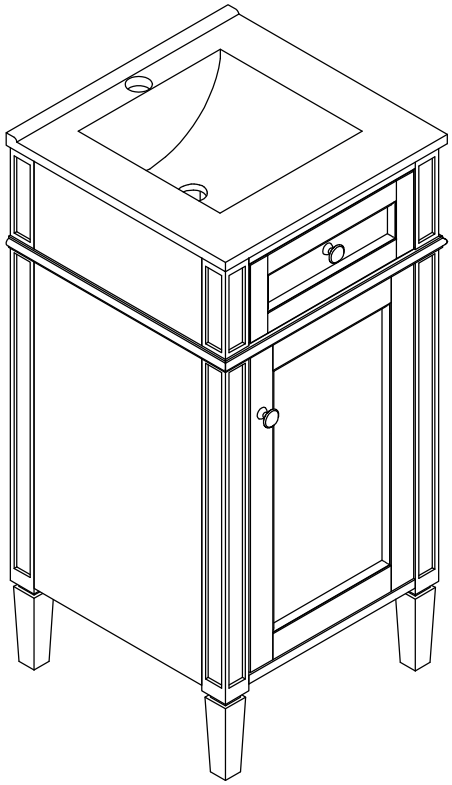

Thank you for purchasing this quality product. Be sure to check all packing material carefully for small parts which may have come loose inside the carton during shipment. Separate, identify and count all parts and hardware. Compare with the parts list to be sure all parts are present.
"DO NOT TIGHTEN SCREWS UNTIL COMPLETELY ASSEMBLED"

* Use of power tool to assemble this product will invalidate any claim and damage this product making unsafe !!!
* Please assemble on a clean soft surface to avoid damage.

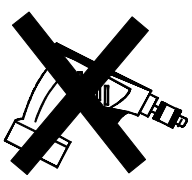

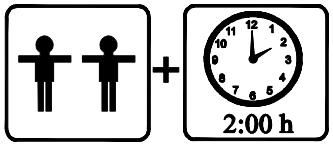

Tools Required

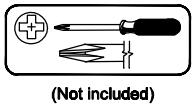
(Not included)

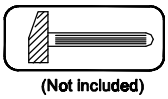
(Not included)

IMPORTANT:

PLEASE READ INSTRUCTION BEFORE STARTING THE ASSEMBLY

PLEASE DO NOT RETURN TO STORE



Please do not return this product to the retailer!!
We are able to assist you in ANY way

If you find that you have any trouble with assembly or missing or damaged parts please contact the seller.

Before Installation

Important - Please read these instructions fully before starting assembly

Thank you for purchasing this quality product. Be sure to check all packing materials carefully for small parts, which may have come loose inside the carton during shipment. Identify and count all items according to the PARTS LIST and/or HARDWARE LIST shown below. Check you have all the components and tools listed on the following pages.

. We recommend that you assemble this product with the assistance of another person; this will make the assembly easier, and will help eliminate damage to the product or injury to persons during assembly.

. Please do not over tighten screws or bolts until the assembly is completed.

. Keep children and animal away from the work area, small parts could choke if swallowed.

. Please put all parts on a non-abrasive floor before assembly,and follow the assembly steps to assemble your newly purchased product correctly and efficently.

If you find that you have any trouble with assembly or missing or damaged parts please contact the seller.

Cam Lock Assembly Instructions

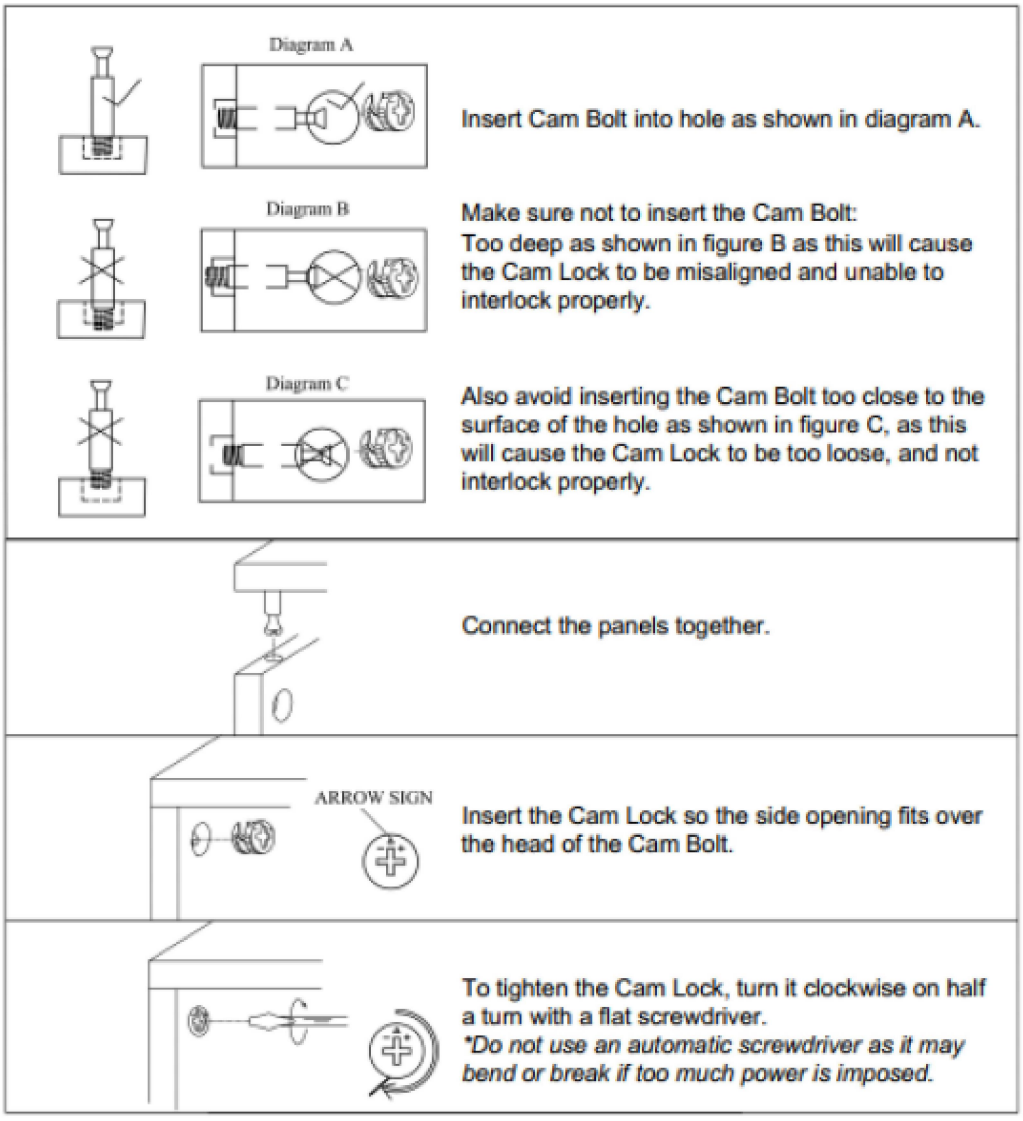

Detail View - CABINET

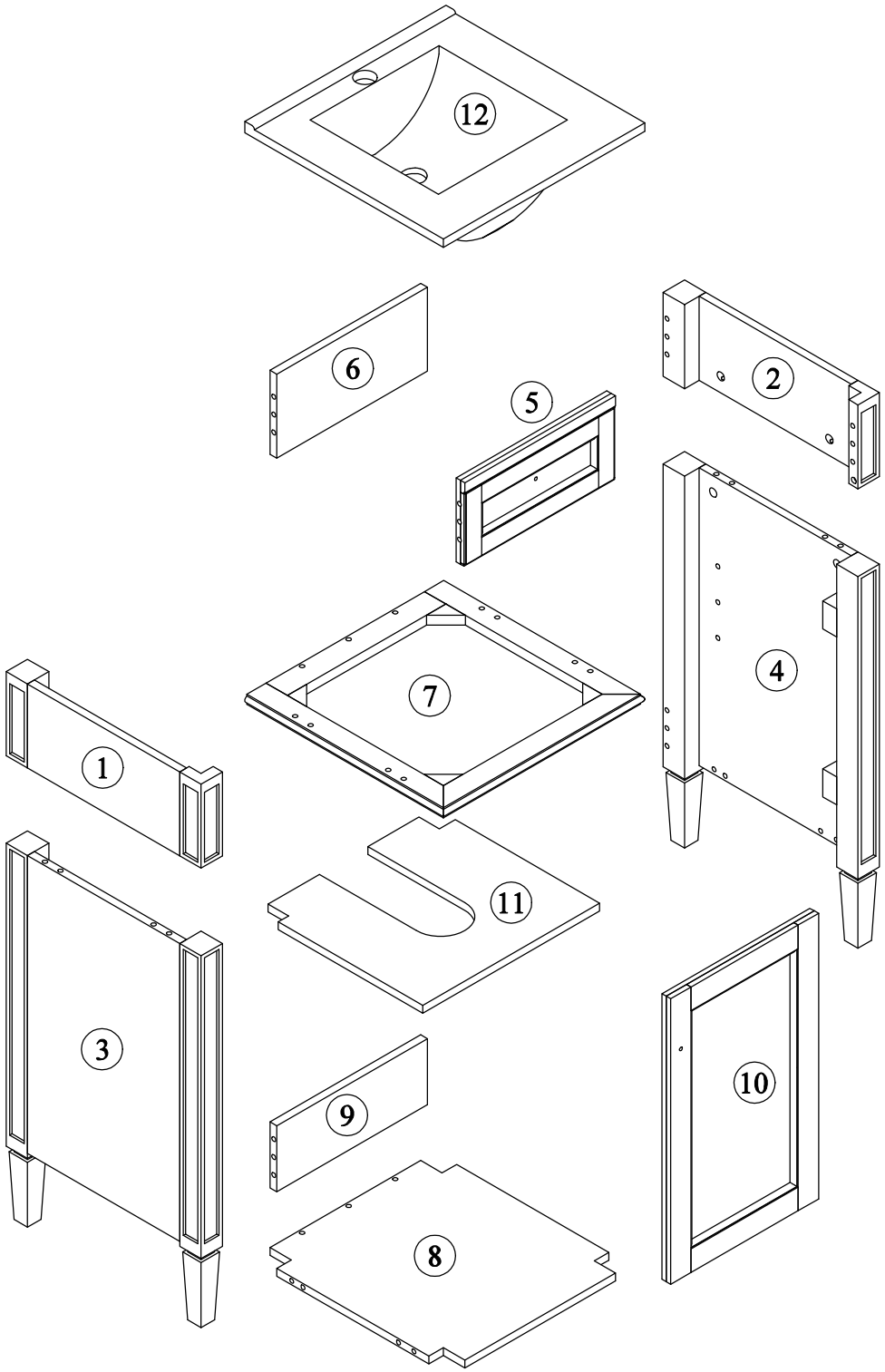

Identifying the Hardware-Identify the hardware using the illustrations below.

Part List

1 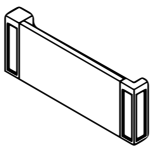 Side Panel Top (L) - 1pc	2 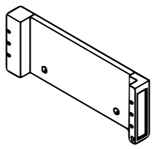 Side Panel Top (R) - 1pc
3 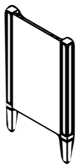 Side Panel Bottom (L) - 1pc	4 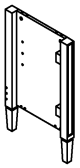 Side Panel Bottom (R) - 1pc
5 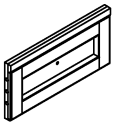 Front Panel Top - 1pc	6 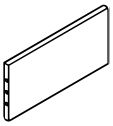 Rear Panel Top - 1pc
7 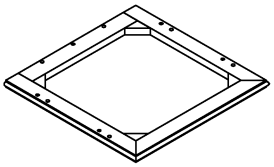 Mid Frame - 1pc	8 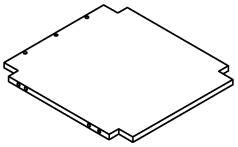 Bottom Panel - 1pc
9 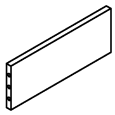 Rear Panel Bottom - 1pc	10 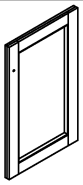 Door Cabinet - 1pc
11 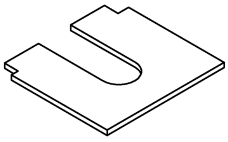 Adjustable Shelf - 1pc	12 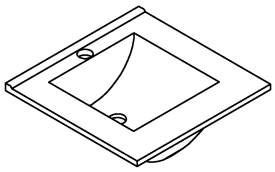 Sink - 1pc

Hardware List

A 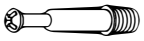 ø6x35mm	B  ø14.5x9mm	C 
Three in one bolts (26pcs)	Three in one lock (26pcs)	Handle (2pcs)
D  ø5/32"x15mm	E  ø5/32"x20mm	F 
Handle screw (1pc)	Handle screw (1pc)	Damping hinge (2pcs)
G  ø7xø3.5x15mm	H 	I  ø8x30mm
Flat head screw (12pcs)	Laminate pad(4pcs)	Wood dowel (22pcs)
J 		
Anti fall hardware (2sets)		

STEP: 1

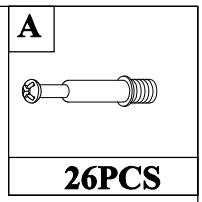

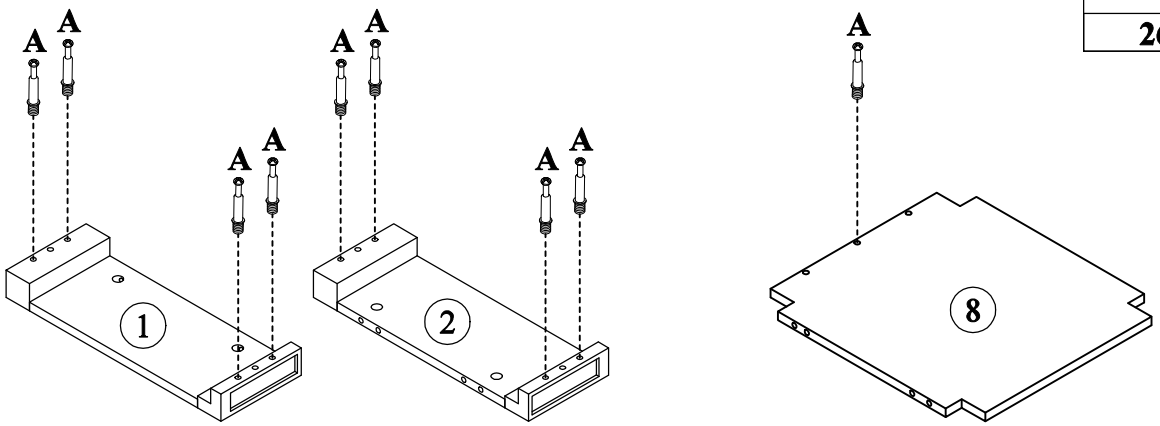

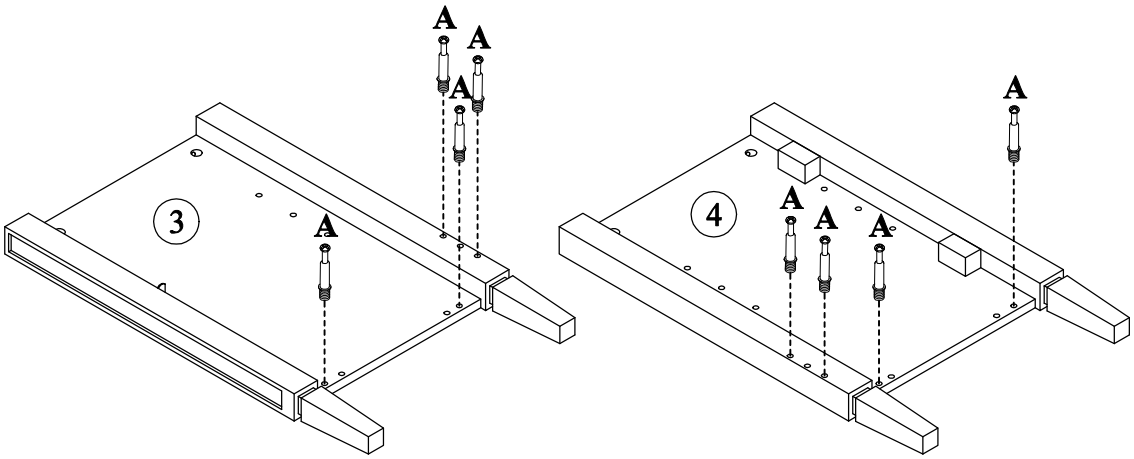

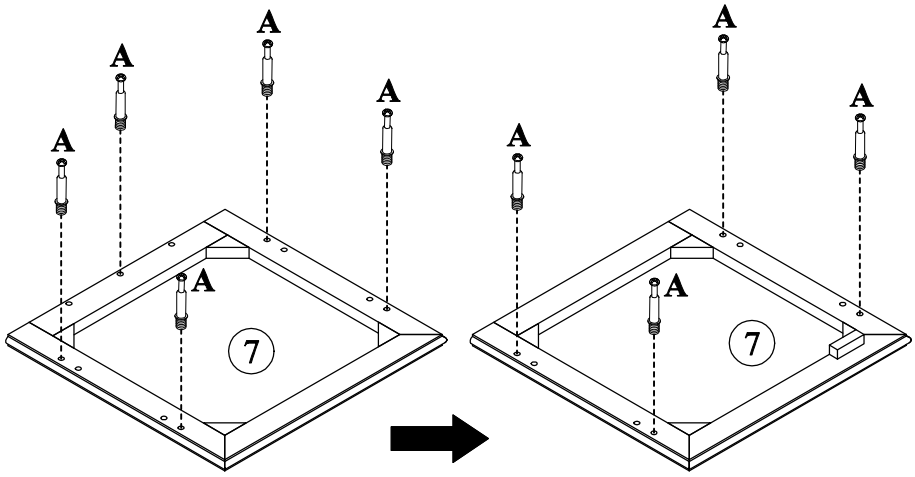

Turn over and install screws (A)

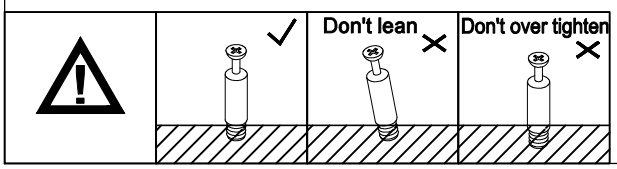

STEP: 2

B	I
	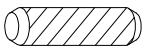
1PC	2PCS

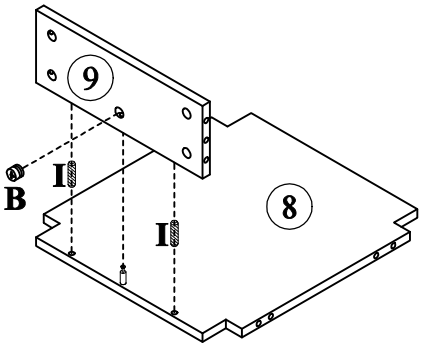

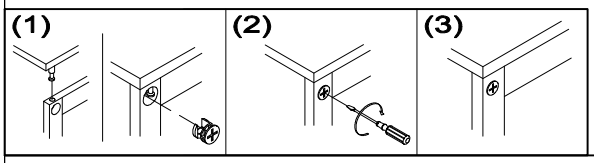

STEP: 3

B	I
	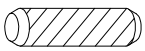
8PCS	6PCS

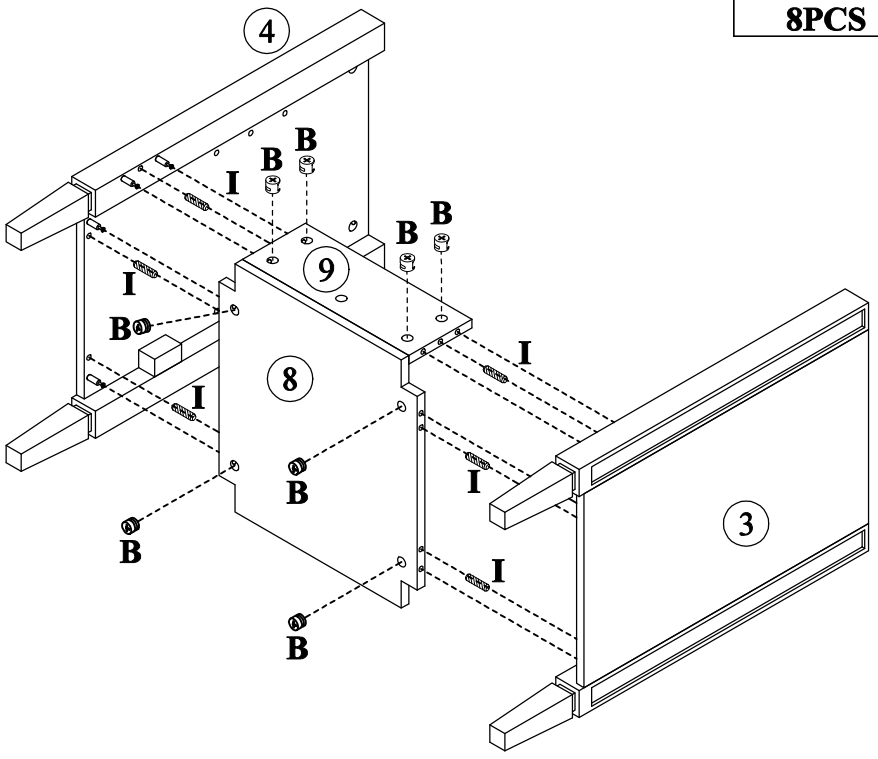

STEP: 4

B	I
4PCS	4PCS

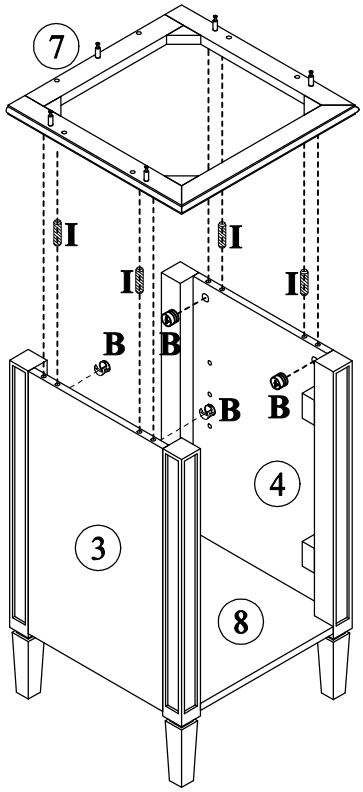

STEP: 5

B	P
8PC	4PCS

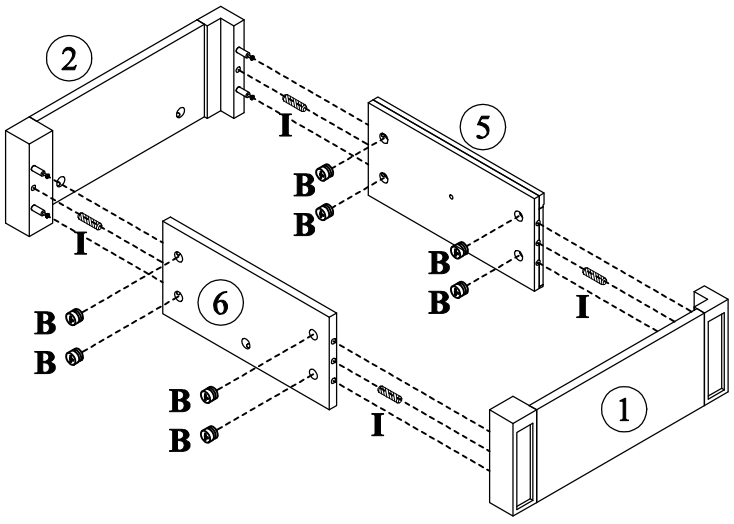

STEP: 6

B	I
	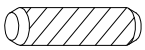
5PCS	6PCS

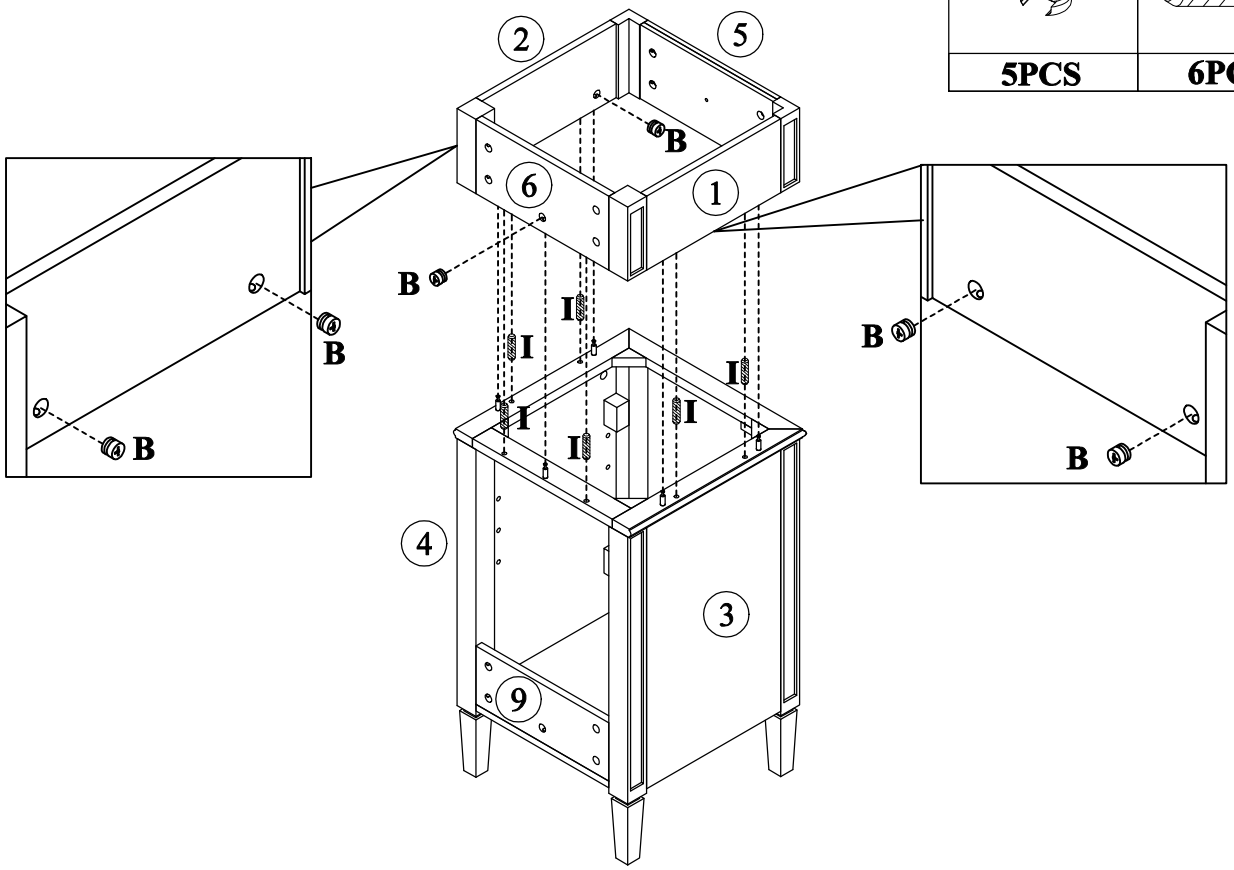

STEP: 7

C	D
	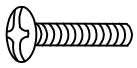
1PC	1PC

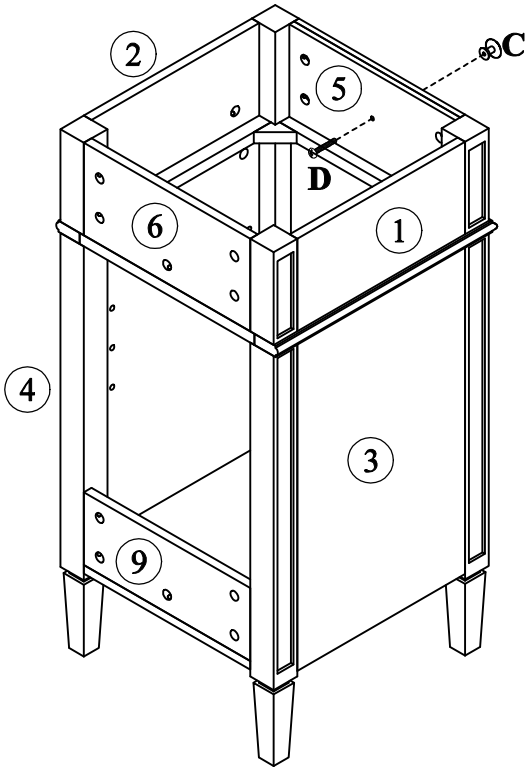

STEP: 8

F	G
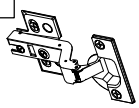	
2PCS	4PCS

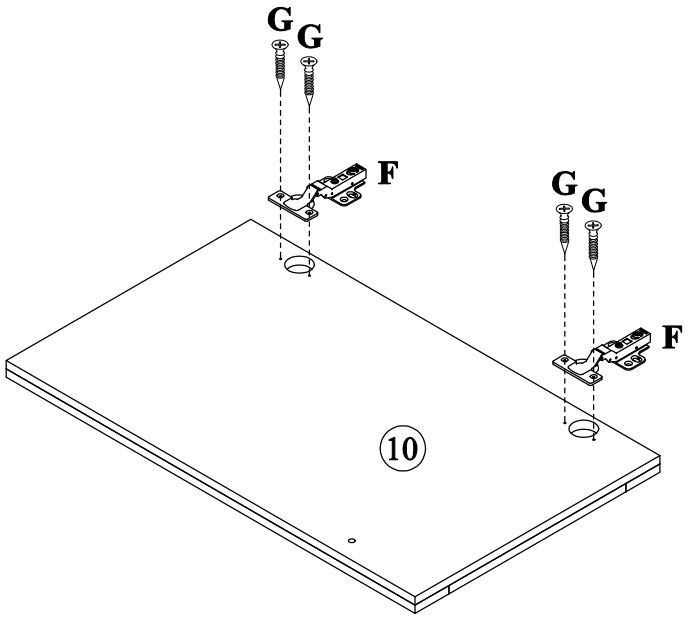

STEP: 9

C	E	G
	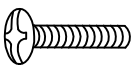	
1PC	1PC	8PCS

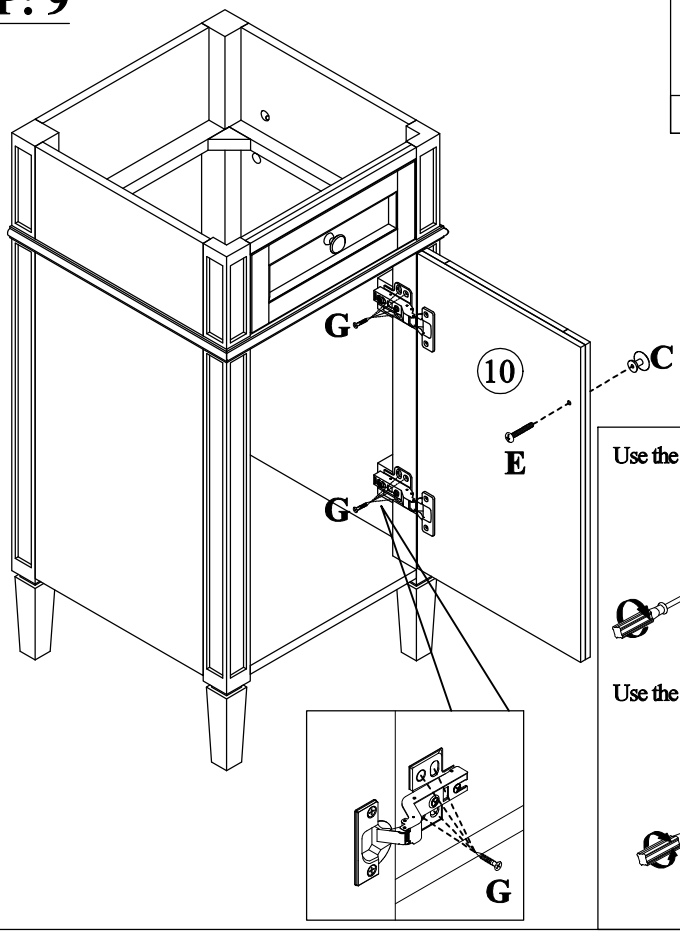

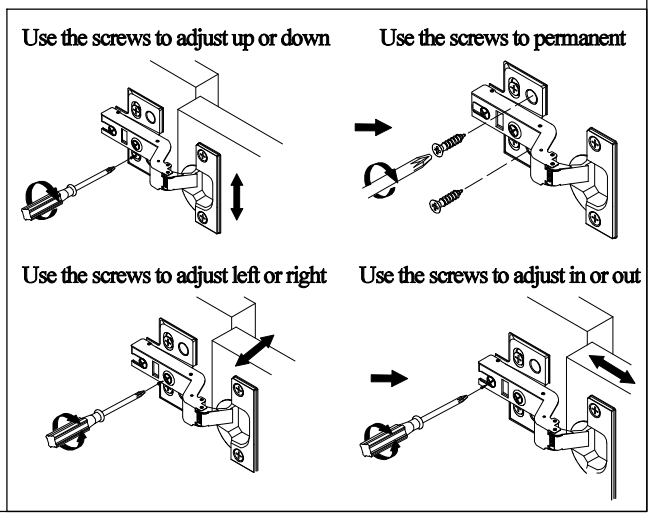

STEP: 10

H

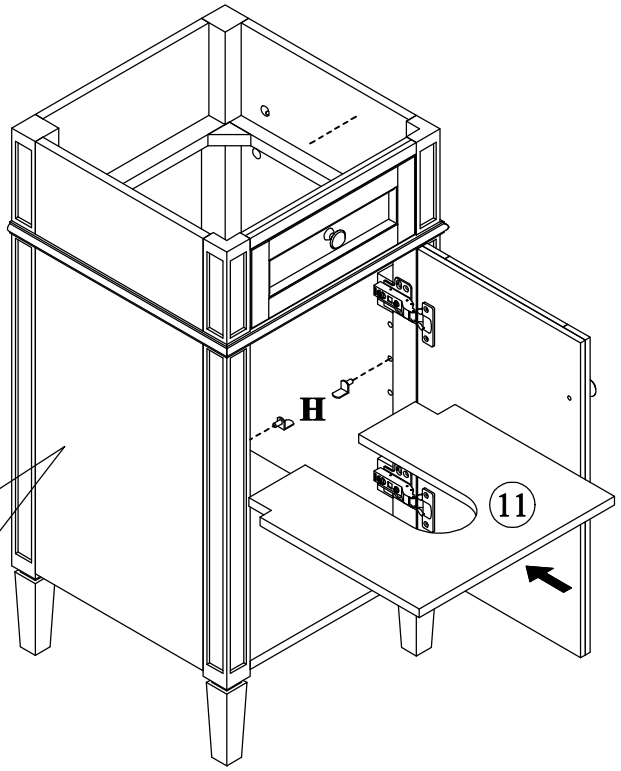

4PCS

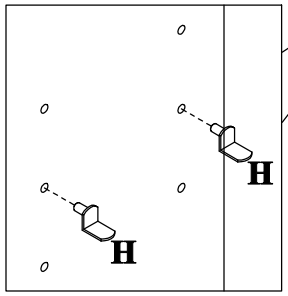

STEP: 11

J

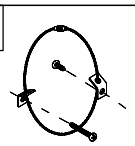

2SETS

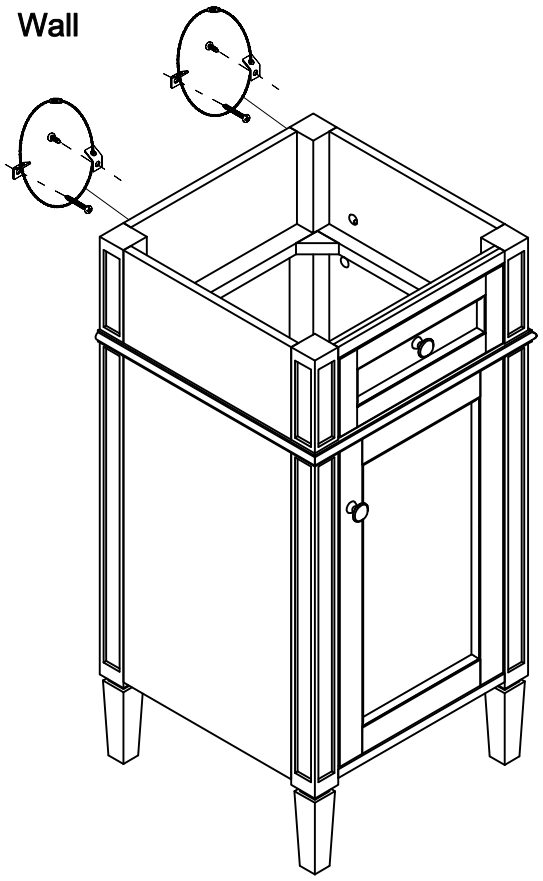

STEP: 12

Install the sink on the cabinet with glue.
Let stand for 24 hours

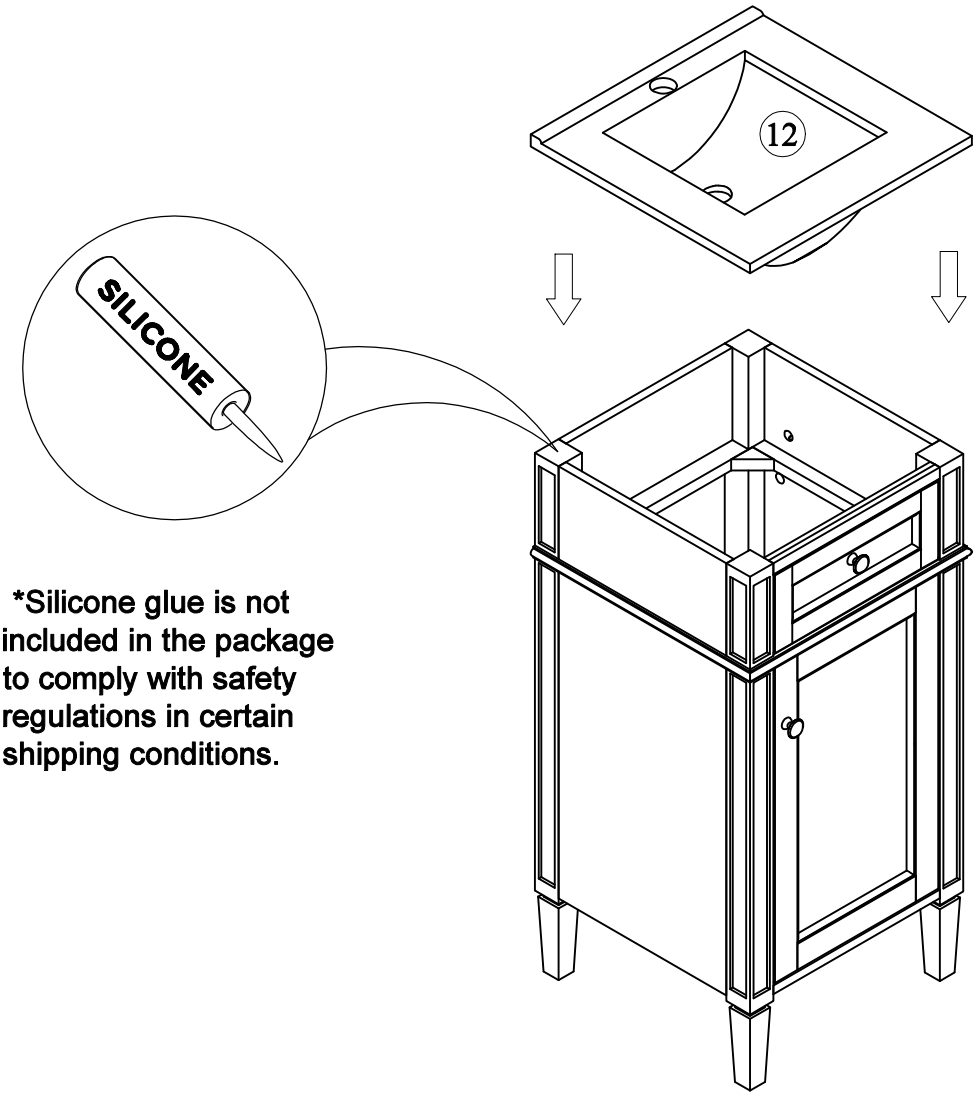

*Silicone glue is not included in the package to comply with safety regulations in certain shipping conditions.

STEP: 13

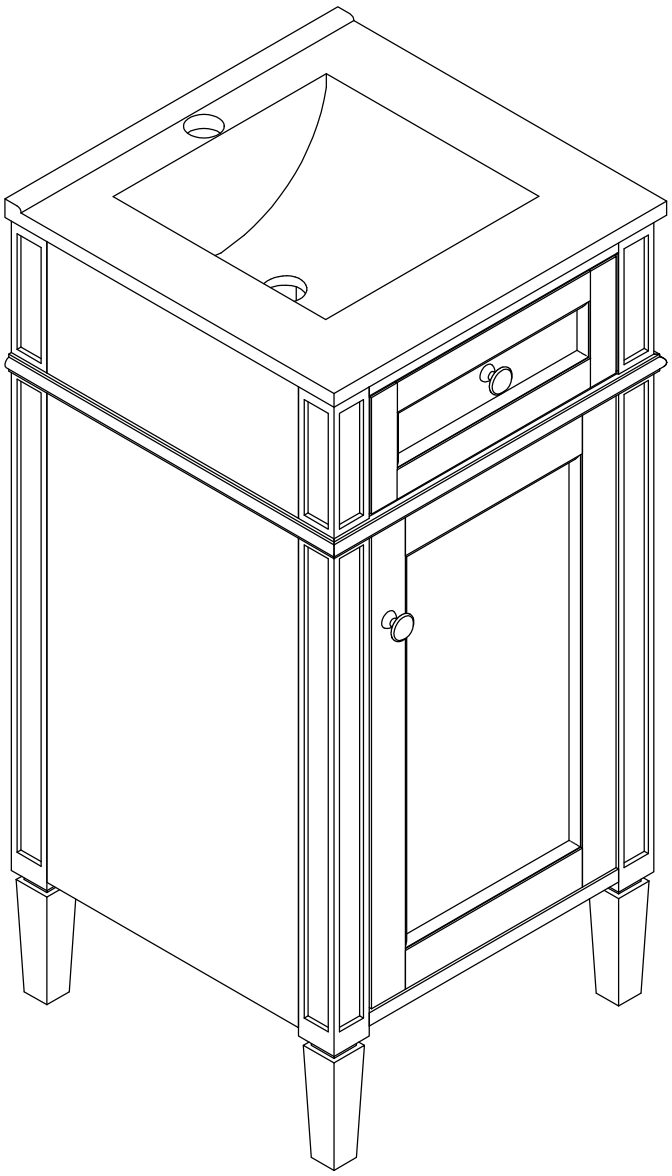



HINGE ADJUSTMENTS

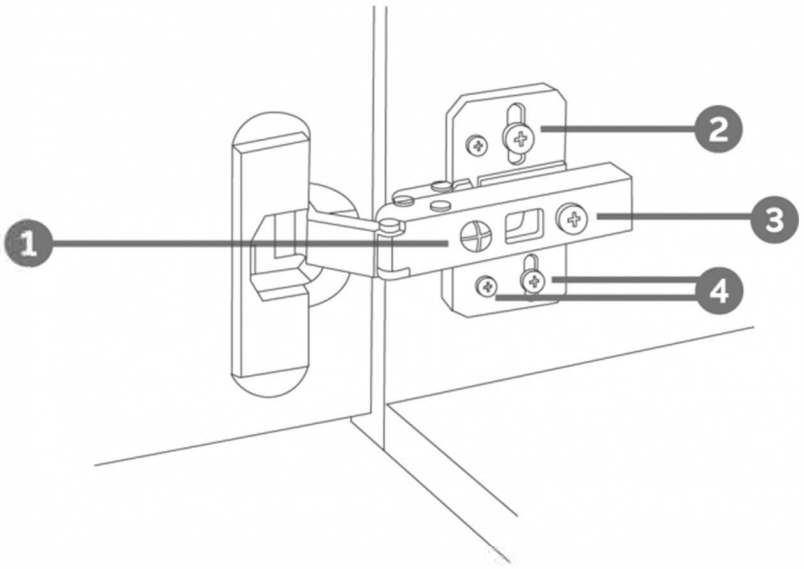

1 Sideways / Tilt adjustment

Turn the screw
clockwise to move the door further away from the side of the cabinet
anticlockwise to move the door closer to the side of the cabinet

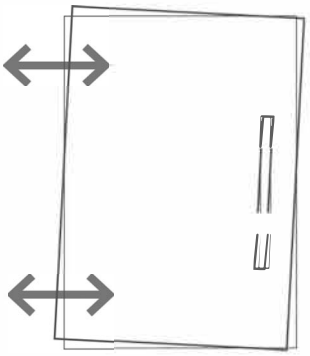

2 4 Height adjustment

While supporting the weight of the door, turn the screws
clockwise to move the door up
anticlockwise to move the door down

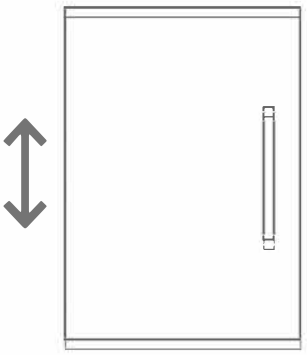

3 Forward and back adjustment

If the gap between the back of the door and the cabinet is too small, and the door may not close fully. Turn the screw
clockwise to decrease the gap between the door and the cabinet
anticlockwise to increase the gap between the door and the cabinet

