Assembly Instructions

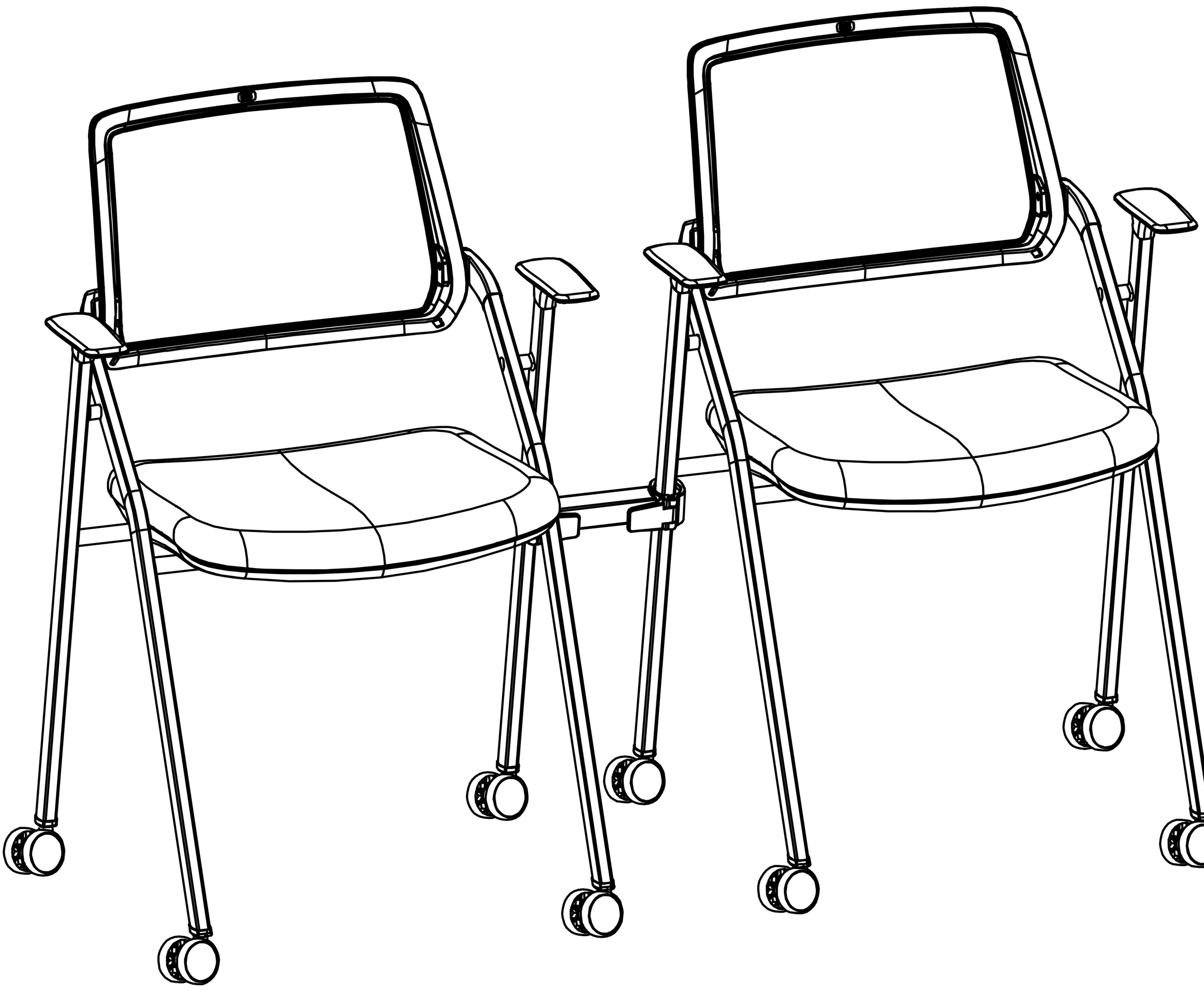

Assembly Instructions

INSTALLATION GUIDE

ONE PERSON ASSEMBLY: 5 MINUTES (APPROXIMATE)

BEFORE ASSEMBLY

1. Remove all packaging materials, staples and packing straps from the carton.
2. Confirm with Parts Checklist in Page 3.

ATTENTION

1. Leave sufficient room for assembly.
2. Do not assemble on the ground that may hurt the product.
3. Do not over-tighten any fittings as it may cause damage.
4. DO NOT USE POWER TOOLS TO ASSEMBLE THIS PRODUCT.
5. Do not sit or stand on it before the assembly is complete.

DAILY MAINTENANCE

1. Recommended for indoor use only.
2. Wipe with a soft, dry cloth. Keep away from abrasives and household cleaners.
3. Check all the fittings periodically and re-tighten if necessary. Do not use the product if any part is damaged or broken.

Office Desk Chair Warranty Policy

Here is the sanitized version with all brand names removed and replaced with neutral, manufacturer-agnostic terminology:

Office desk chairs are warranted from the date of purchase due to material and workmanship factors. Details as follows:

1 YEAR on all unmovable metal parts;

1 YEAR on upholstered PU leather and foam;

1 YEAR on component parts including control mechanism, gas cylinder, wood, plastic parts, base and casters.
To make a warranty claim, please contact customer support with the model number, proof of purchase, problem description, and photos that clearly show the issue.

Once the problem is verified, the manufacturer will:
a) Send replacement parts.
b) Send a new product if necessary; the customer will need to return the original item to our warehouse. Return shipping costs will be covered by the manufacturer.

RETURN POLICY

A 30-day free return policy is available after receiving the product. Prepaid return labels will be provided, and return shipping costs will be covered.

PARTS CHECK LIST

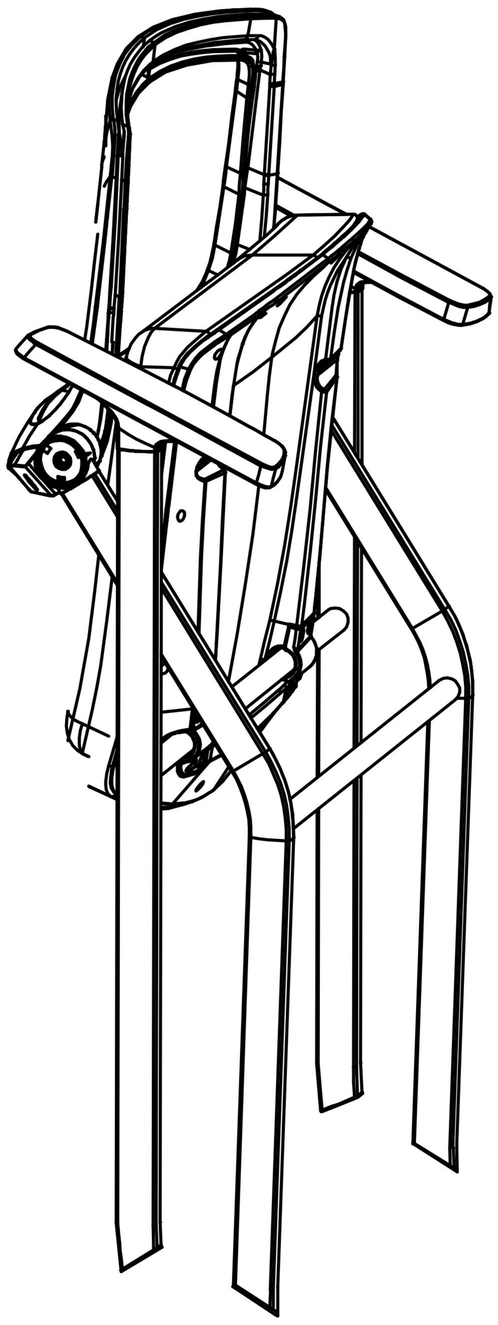

Ax2

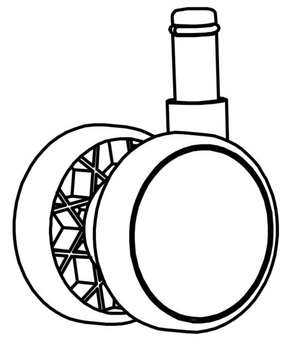

Bx8

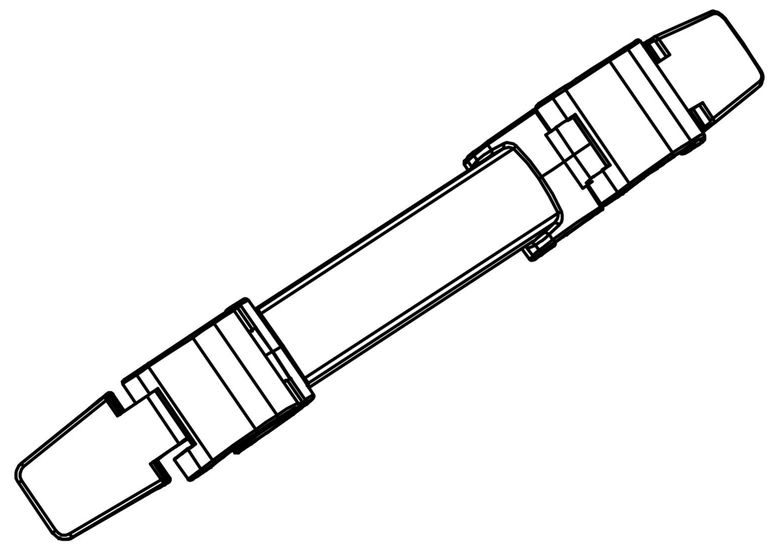

Cx1

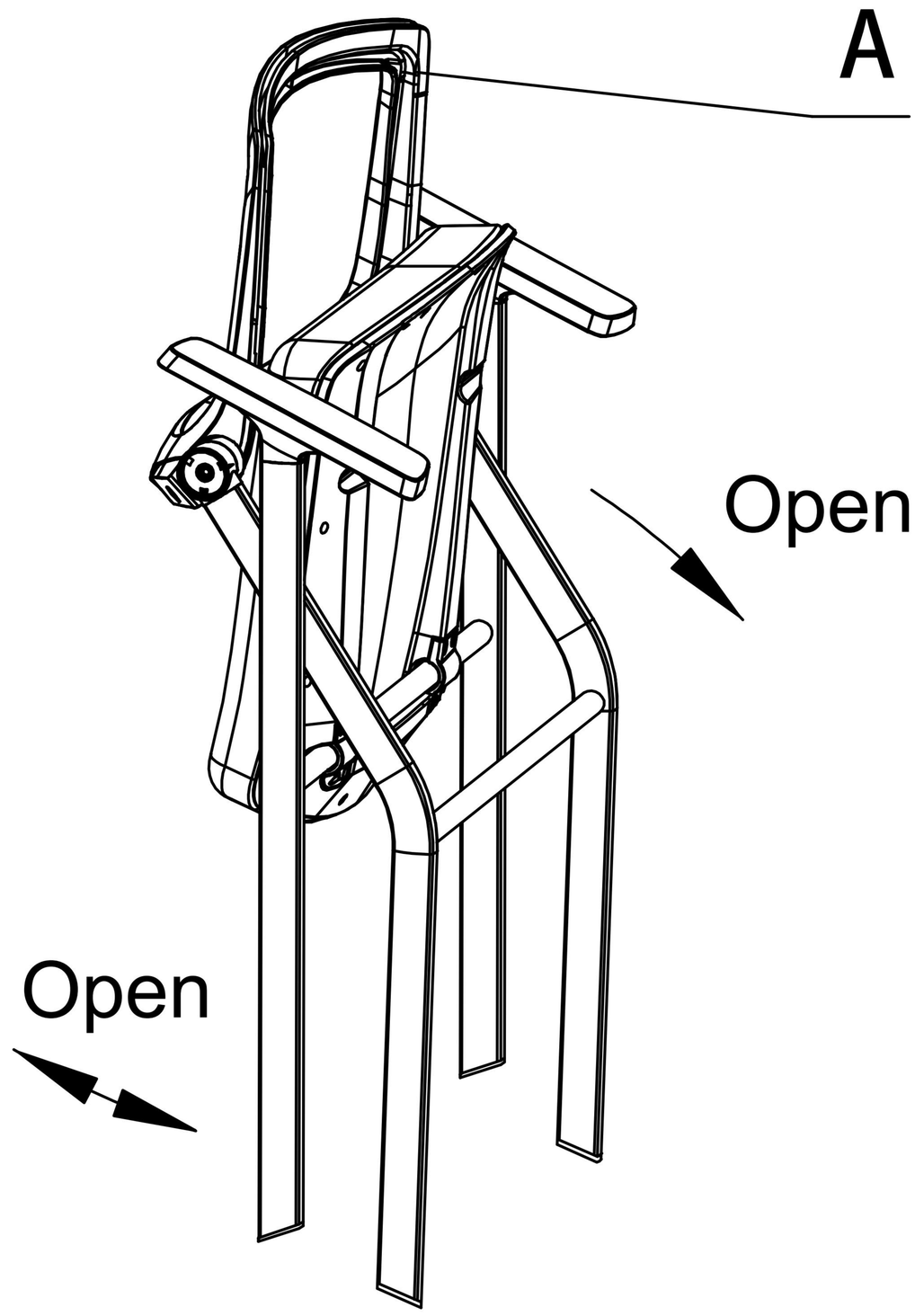

Step 1: Open the Chair **A** as the picture.

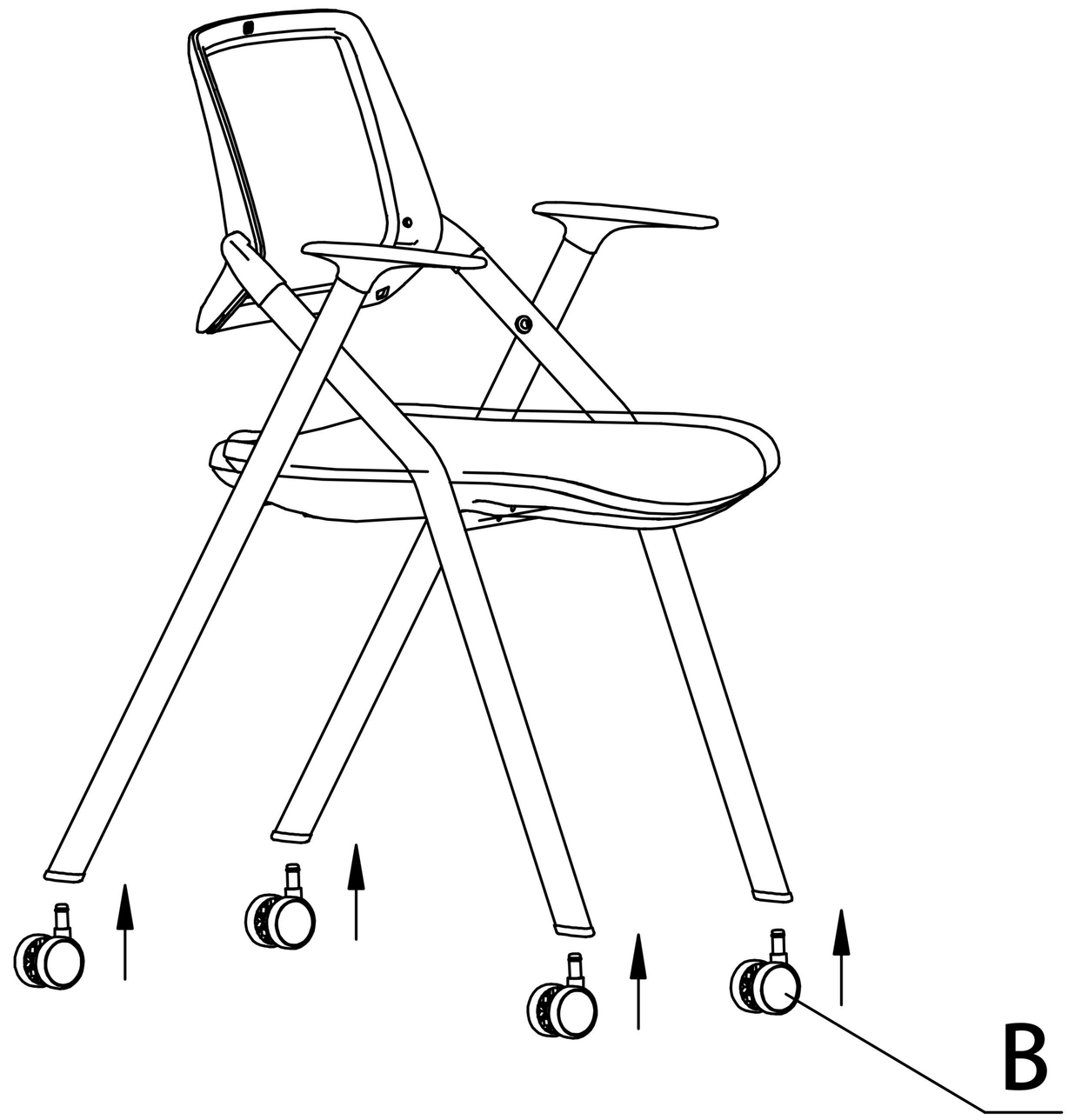

Step 2: Insert Casters **Bx8** into the chair with force.

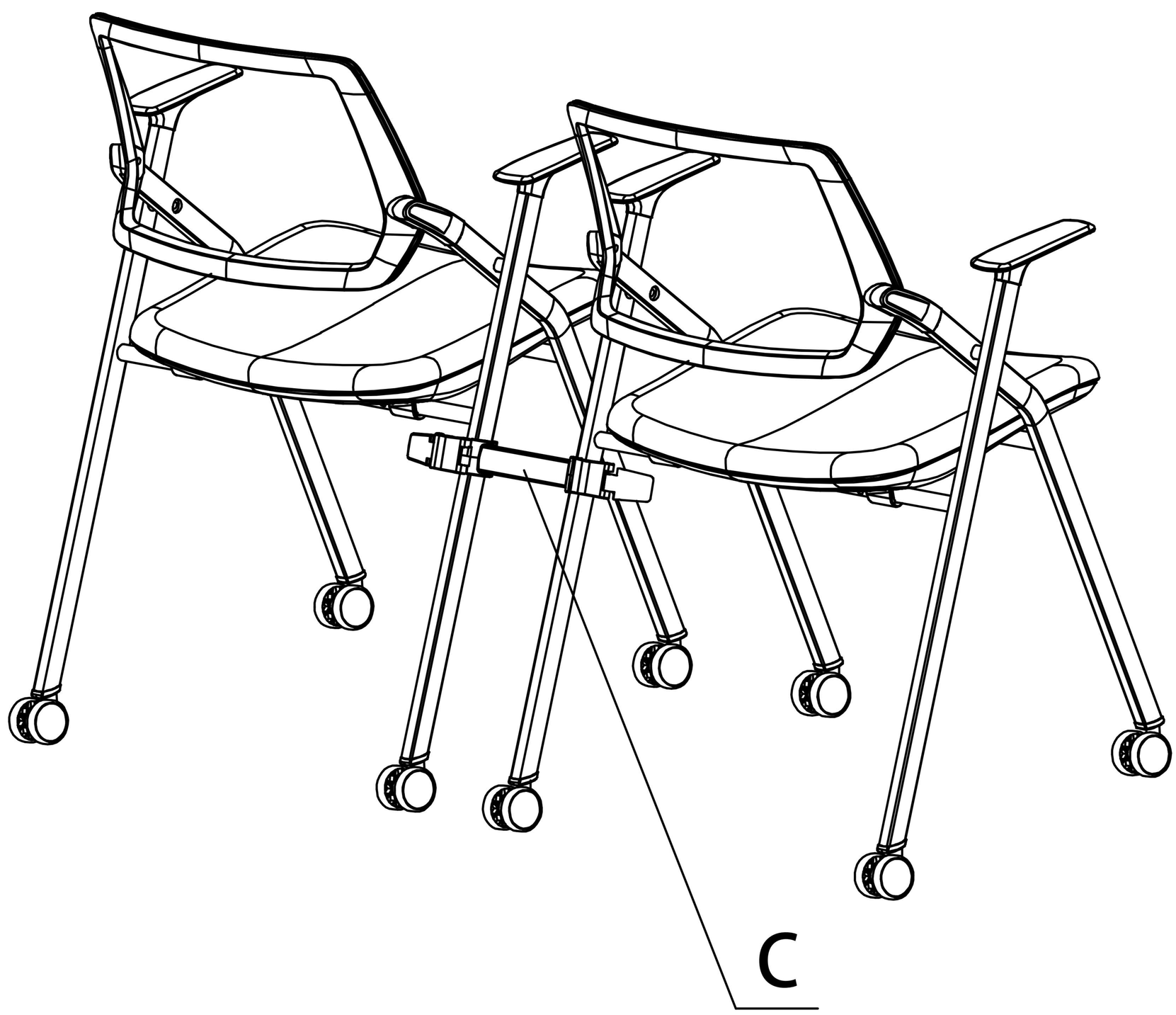

Step 3(If Needed): Fasten the Connector **C** as the picture.

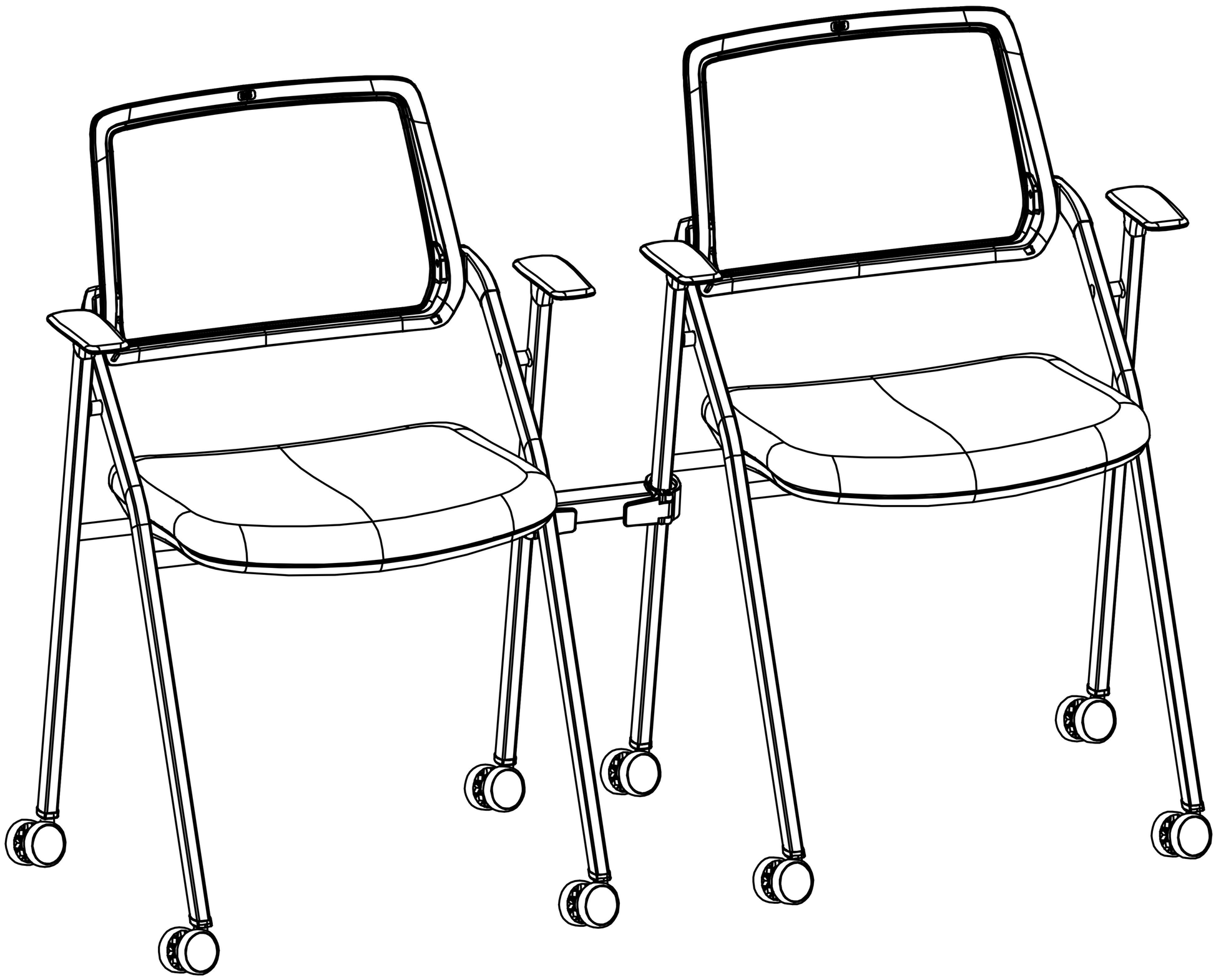

Step 4: Enjoy your new chairs!

THANK YOU
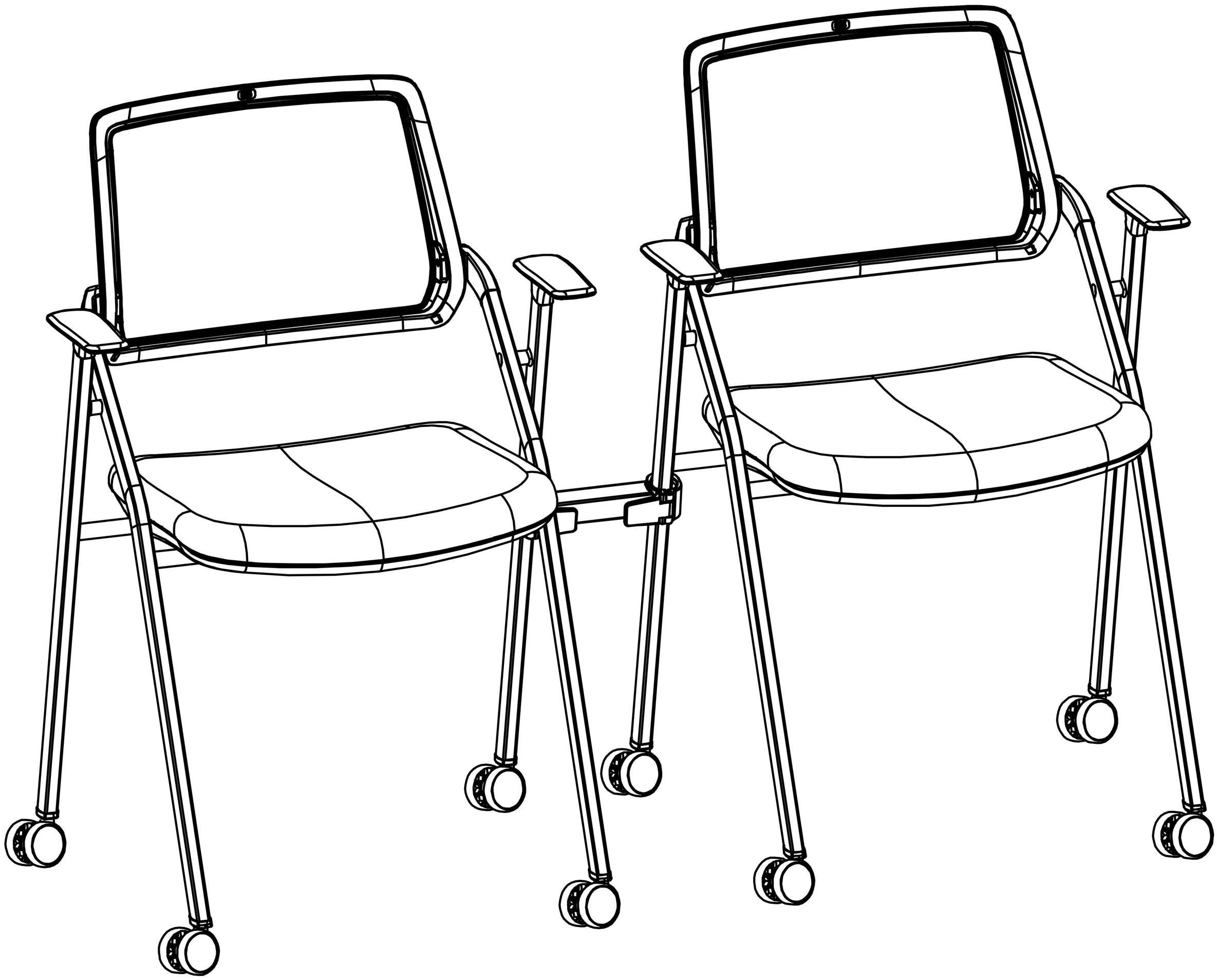
Thank you for choosing our product. We sincerely hope that the assembly process has been smooth and enjoyable for you.
If you have any questions or suggestions during the use of the product, please feel free to contact us.