INSTALLATION

CAUTION

Parts are placed at the bottom of the product.

Assembly Instructions

CAUTION

DO NOT use any sharp objects to open plastic wrapped components as this may result damage to product or components .

This product comes in multi-box packaging. Please carefully remove all components from the packaging and set them aside for assembly.
(Please select the installation method that best suits your purchase needs.)

Package Contents

BOX 1	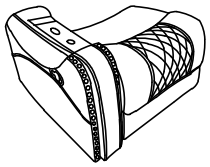			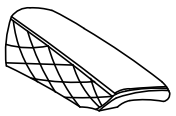
	A*1	B*1	C*1	D*1
BOX 2	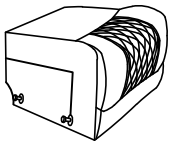	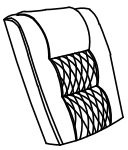		
	E*1	F*1		
BOX 3	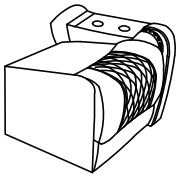	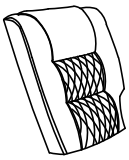		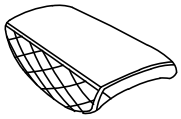
	G*1	H*1	I*1	J*1
BOX 4	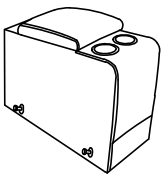	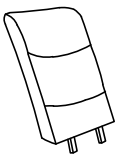		
	K*1	L*1		

Package Contents

BOX 5	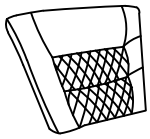			
	M*1	N*1		
BOX 6	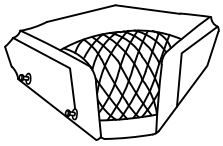			
	O*1			

STEP 1

First, remove the backrest (L) from underneath the coffee table base (K), then align the backrest with the rear attachment point of the base and press down to secure the backrest to the base.

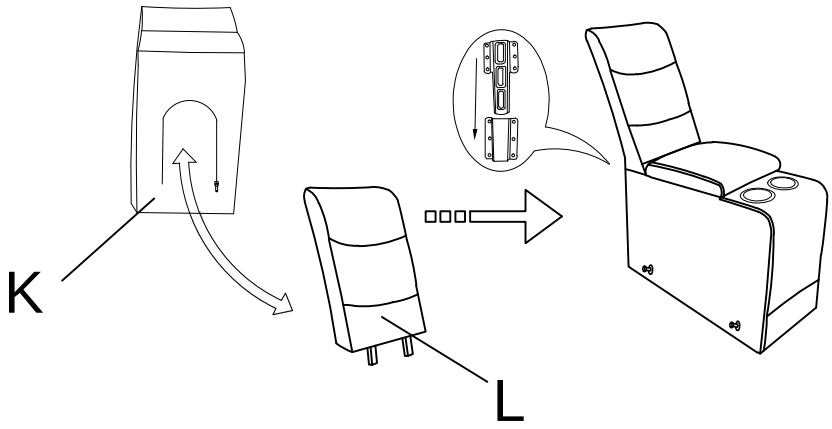

STEP 2

Align the left and right armrest covers (D&J) with the corresponding holes on the left and right base armrests, then press down to secure the armrest covers onto the armrests, ensuring a firm assembly.

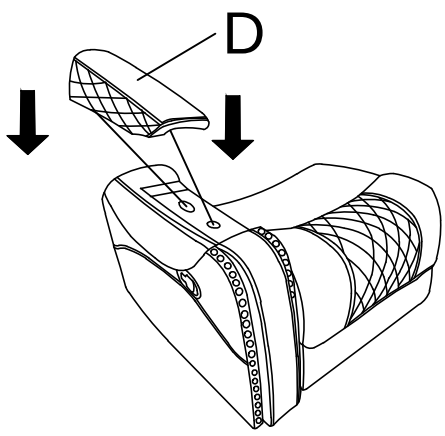

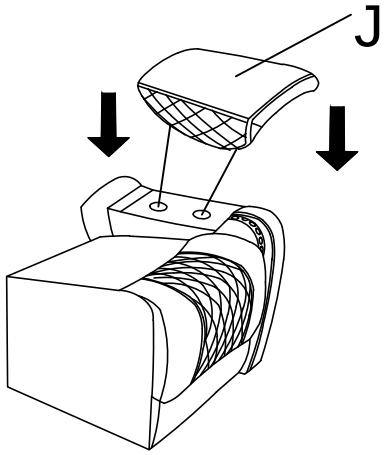

1 RECLINER ASSEMBLY - BODY SETUP

STEP 3

Align the backrests (B, F, H) in sequence with the base (A, E, G), then p*es of the base. Next, align the corner backrests (M, N) with the corner base (O), and press downward until fully seated to ensure proper assembly.

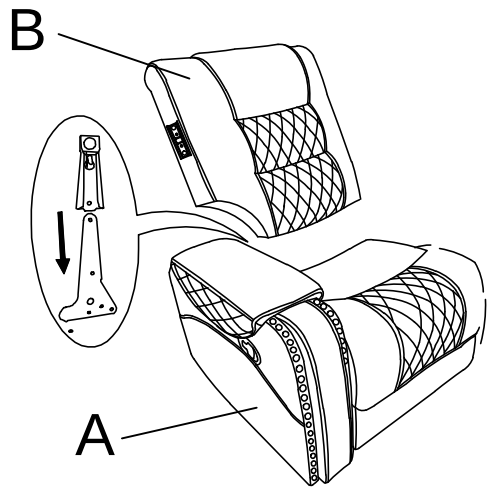

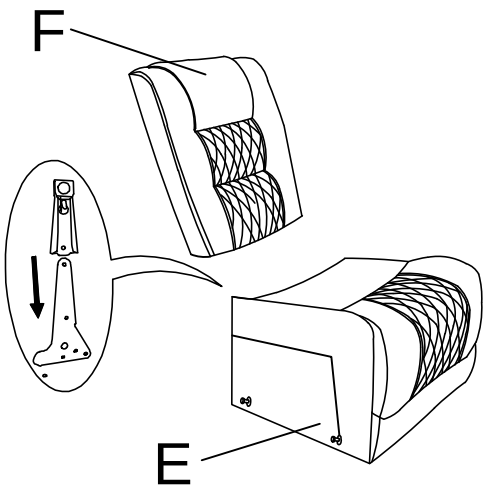

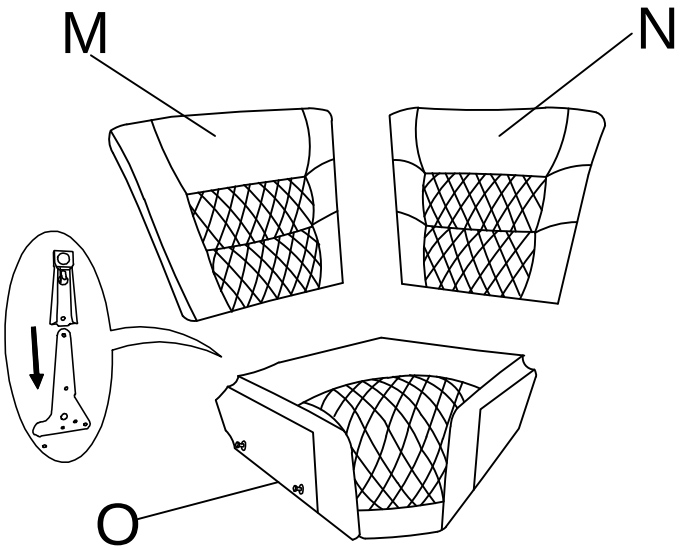

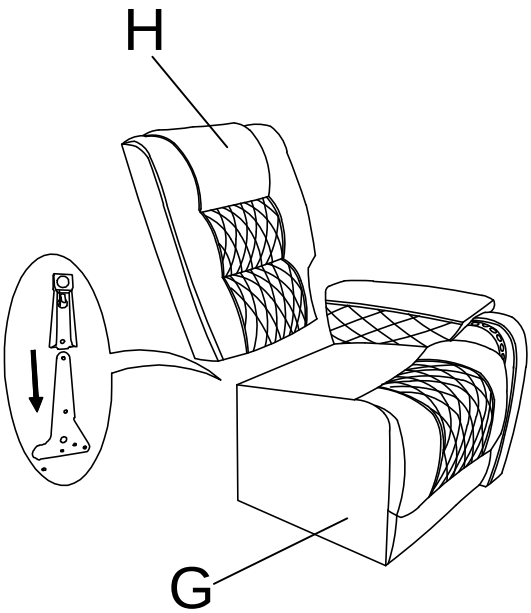

2 RECLINER ASSEMBLY - BODY SETUP

STEP 4

Align the left and right back ears (C&I) with the left and right sides of the sofa’ s backrest (B&H), then press the back ears downward to engage the metal grooves, ensuring a secure assembly.

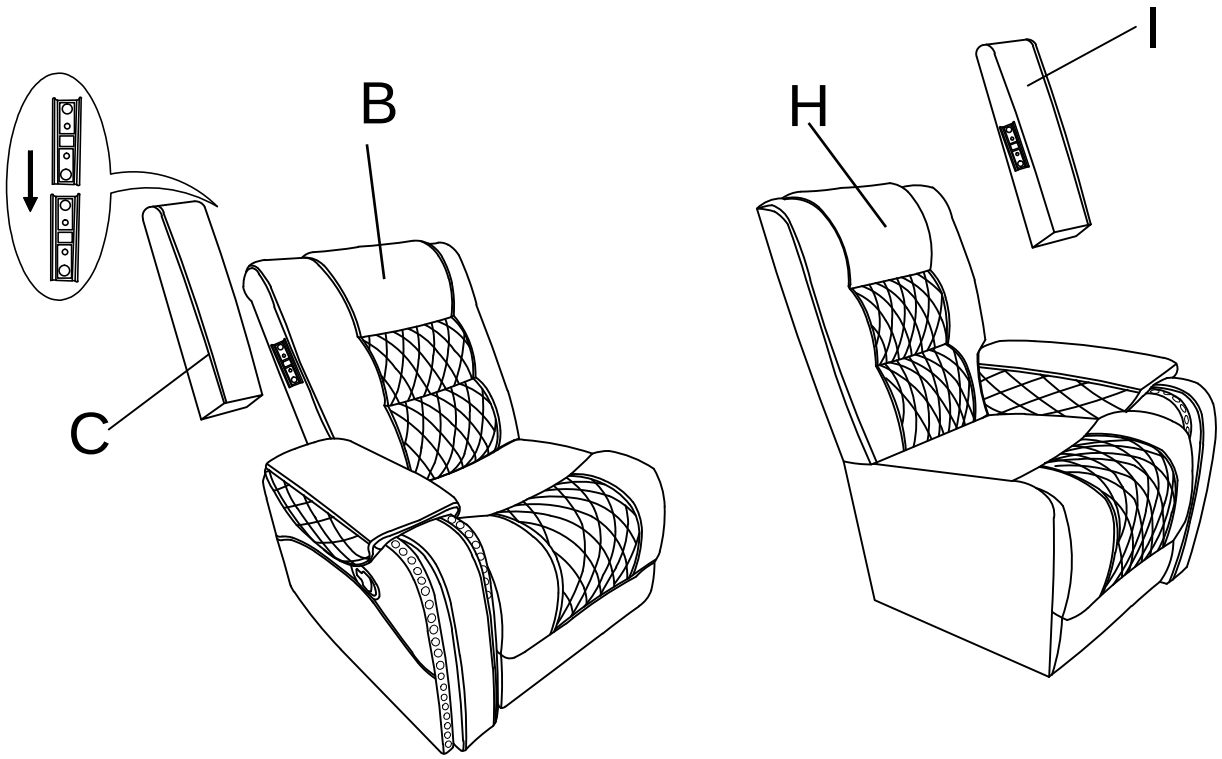

3 RECLINER ASSEMBLY - BODY SETUP

STEP 5

Align the sofa base and secure the sofa sections together using the metal sliders on the sides. You can freely assemble them in any configuration you prefer. Once installed, ensure the assembly is secure.

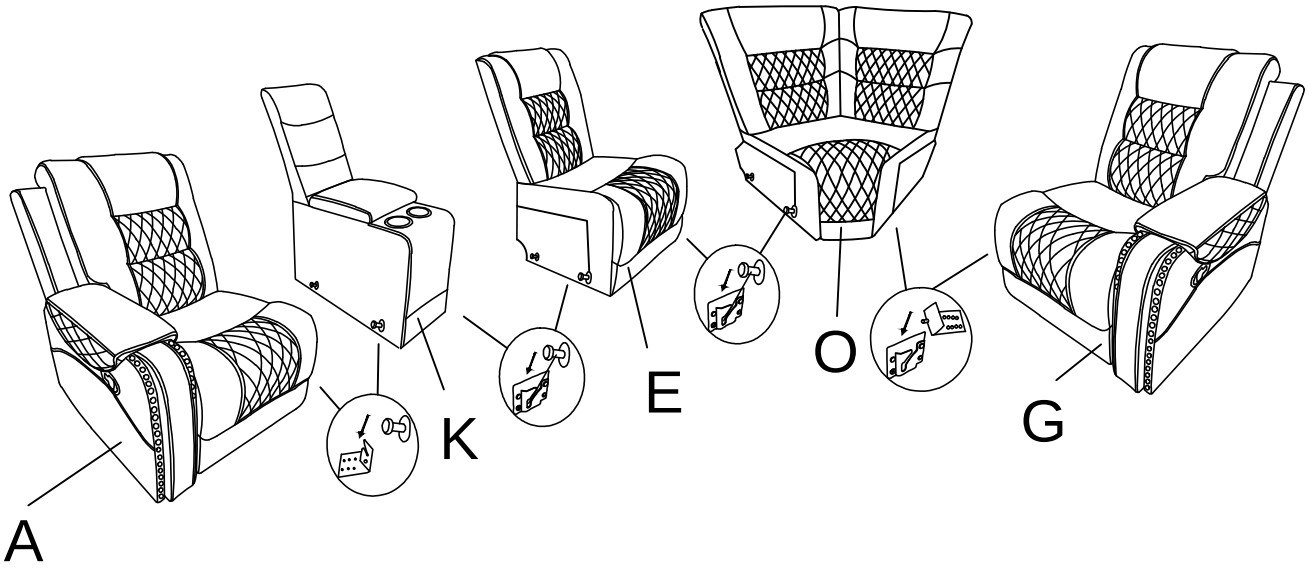

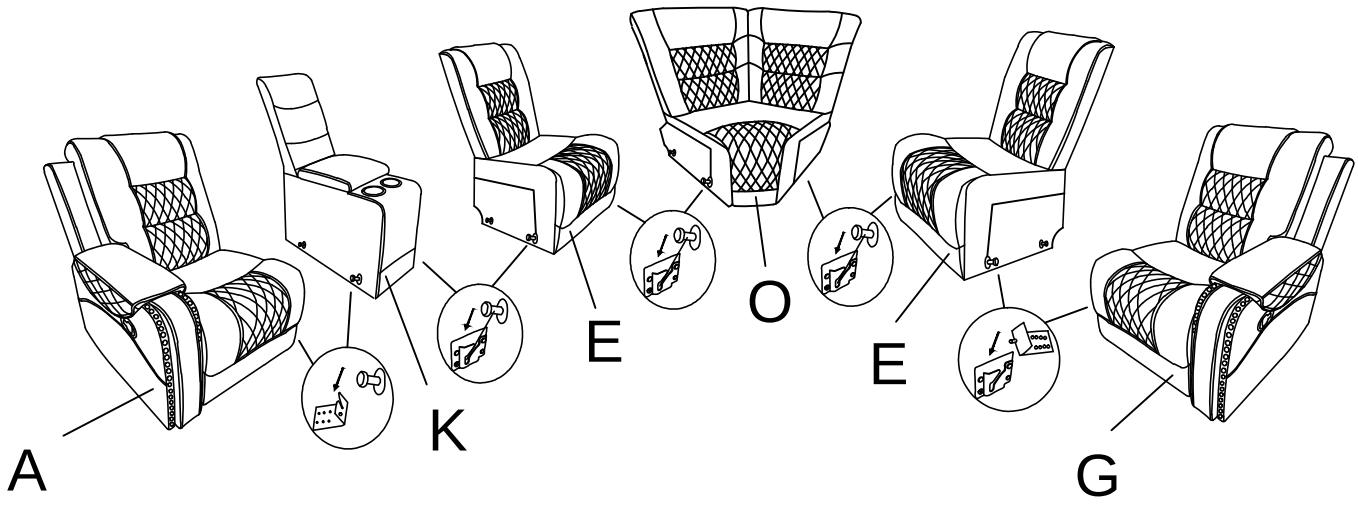

4 RECLINER ASSEMBLY - BODY SETUP

ASSEMBLY COMPLETED

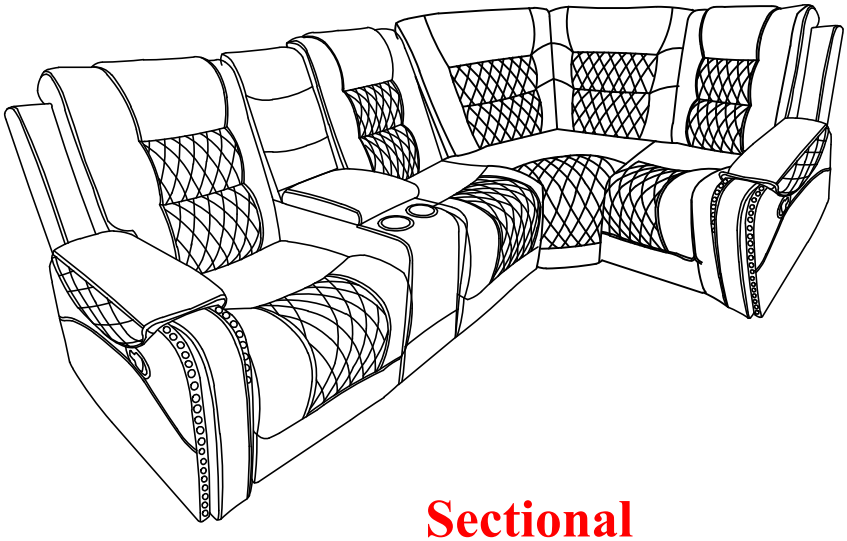

Sectional

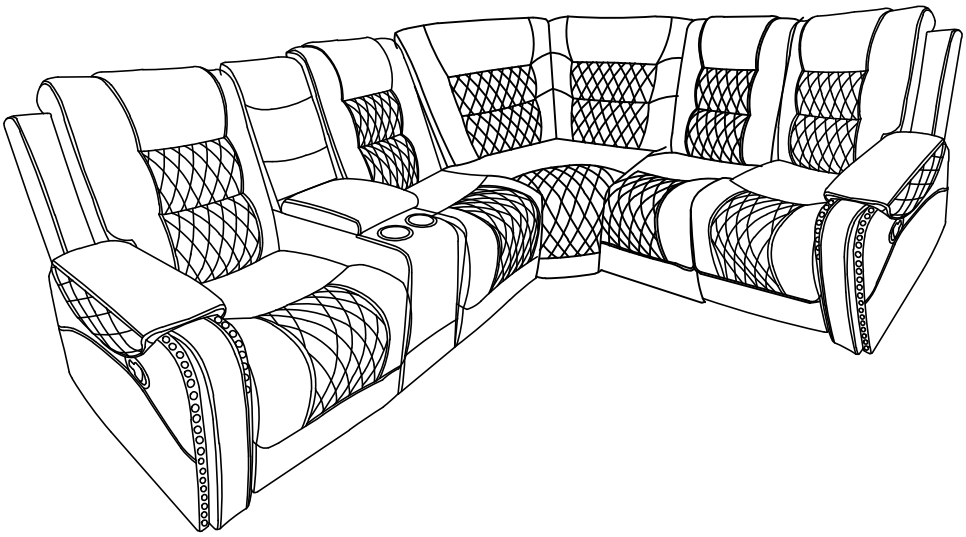

Sectional

⚠WARNINGS

1. Please check if the components of the sofa are all included and can be used normally.
2. Assemble all components according to the instruction correctly before you sit.
3. Please DO NOT sit on the armrests or footrest to eliminate the risk of tipping over.
4. If the sofa is damaged or doesn't match the website description, please send clear pictures of the product and label of the carton to our service team for further help.
5. If the recliner doesn't work, you may try the following measure for self-checking firstly: check if all the components are connected
   If the sofa still doesn't work, please feed the information back to our customer service in time and we will help you solve the matter as soon as possible.
6. If you have any questions about our products, please contact us

