# Sectional Right

| | | | |
|---|---|---|---|
|  | 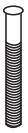 |  |  |
| 8PCS | A:16PCS | B:1PCS | 1PCS |

## STEP 1

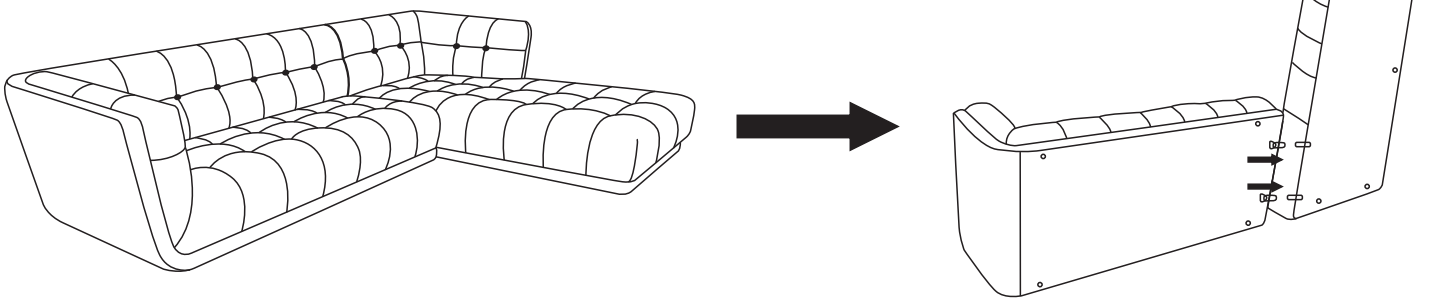

## STEP 2

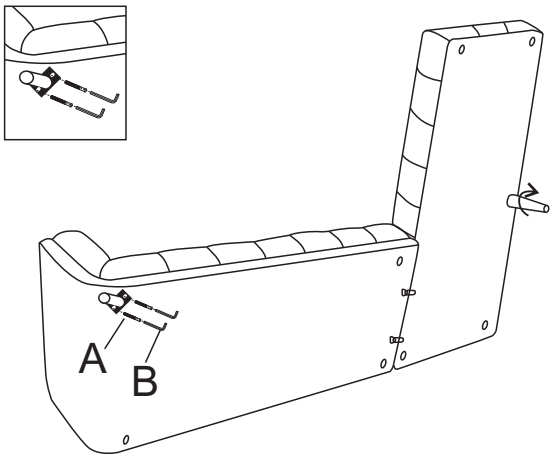


## STEP 3

