TV Stand

Assembly Instruction – Please keep properly for future reference.

If you find any missing boxes, damaged parts, or accessory shortages, please contact the customer service team of your purchasing channel immediately. We will resolve the issue as quickly as possible.

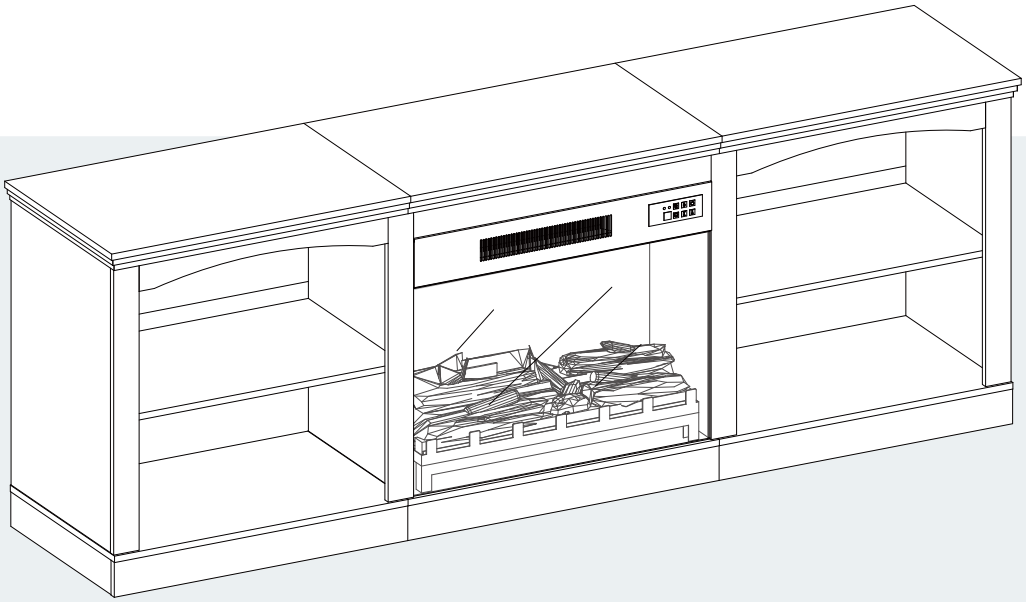

CONTACT US

- **Email: service@grandtunnel.com**
  In order to receive assistance more quickly, please provide

THE FOLLOWING INFORMATION:

- Order number
- Purchase platform
- Purchase date
- Detailed description of the issue along with photos (if applicable)

Important – Please read these instructions carefully before starting the installation.

EN

EN

Before Assembly

Thank you for choosing our product!
To ensure a smooth installation process, please read this guide carefully to familiarize yourself with the required tools, materials, and installation steps.
Follow the relevant sections to avoid any damage caused by improper installation, and make sure to review all operation and safety guidelines for correct installation procedures.

Packaging Notice:

If you find any missing boxes, damaged parts, or accessory shortages, please contact the customer service team of your purchasing channel immediately. We will resolve the issue as quickly as possible.

Safety and Care Advice

Important :
Please read these instructions fully before starting assembly.

- Check you have all the components and tools listed on the following pages.
- Remove all fittings from the plastic bags and separate them into their groups.
- Keep children and animals away from the work area, small parts could choke if swallowed.
- Make sure you have enough space to layout the parts before starting.
- During assembly do not stand or put weight on the product, this could cause damage.
- Assemble the item as close to its final position (in the same room) as possible.
- Assemble on a soft level surface to avoid damaging the unit or your floor.
- Parts of the assembly will be easier with 2 people.



- To reduce the likelihood of damaging your product please ensure that your power drill is set on a low torque setting.

Email : **service@grandtunnel.com**

Care and Maintenance

- Only clean using a damp cloth and mild detergent, do not use bleach or abrasive cleaners.
- From time to time check that there are no loose screws on this unit.
- This product should not be discarded with household waste. Take to your local authority waste disposal center.

Handy Hints

- Assemble all parts and bolts loosely during assembly, only once the product is complete should you fully tighten the bolts.
- Regularly check and ensure that all bolts and fittings are tightened properly.

Warning

In order to help prevent overturning, please follow these instructions.

- Use the anti tip strap or wall fixing method provided (if applicable).
- Do not allow children to climb or hang on the furniture.
- Do not open more than one drawer at a time.
- Do not place heavy items in the top drawers.
- Do not place heavy items on top of the furniture, unless the furniture has been designed for this purpose.
- Please note that only the anti tip strap is provided. You will need to provide wall plugs and screws applicable for your wall type.

Customer Service Guide

Thank you for choosing our product! We are committed to providing you with excellent service. If you find any missing parts, damaged packaging, or product damage after receiving all packages, please follow the steps below to quickly contact our customer service team. We will do our best to resolve your issue.

1. Missing Parts

Verify Parts:

1. Refer to the “Parts List” in the manual to verify the name, specifications, and quantity of the missing parts.
2. Take a clear photo of the parts list and mark the missing parts with detailed information, e.g., “Missing 5 pieces of M6×30mm screws.”

Contact Us:

By Email:

Send an email to **service@grandtunnel.com**, with the subject line “Missing Parts Issue.” Include the following in the email:

- A description of the missing parts and a photo of the parts list.
- Order details (order number, purchase platform, purchase date).

2. Product or Packaging Damage

If it affects normal use:

Steps:

1. Take clear photos or videos showing the damaged parts and the extent of the damage (multi-angle shots are recommended).
2. Email the photos/videos along with order details to **service@grandtunnel.com**, with the subject line “Product Damage Issue.”

Resolution:

After verification, we will arrange for a replacement part, product exchange, or refund as quickly as possible.

Email : **service@grandtunnel.com**

If it does not affect normal use:

Steps:

1. Contact our customer service team (by email: **service@grandtunnel.com**).
2. Provide a description of the damage and include relevant photos or videos.

Resolution:

We will provide repair guidance or an appropriate compensation plan based on the specific situation.

Contact Us:

Customer Service Email: **service@grandtunnel.com**

Helpful Tips

To process your issue efficiently, please prepare the following information:

- Order details (order number, purchase platform, purchase date).
- Clear photos or videos.
- We are committed to providing quick and professional solutions, no matter the size of the issue, to ensure your satisfaction.

Thank you for your trust and support!
We hope you enjoy using our product!

EN

Parts List - Panels

Please check you have all the panels listed below.

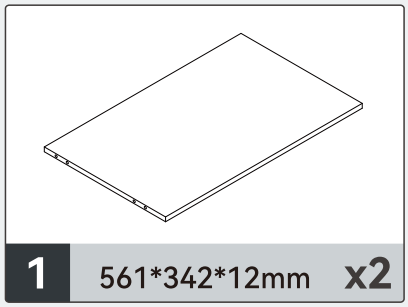

1	561*342*12mm	x2

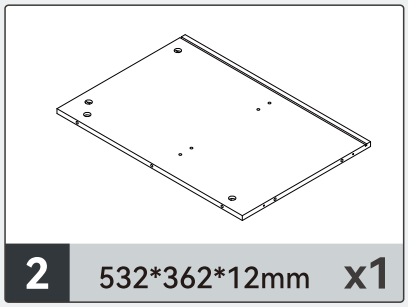

2	532*362*12mm	x1

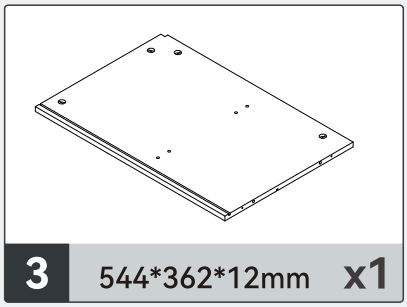

3	544*362*12mm	x1

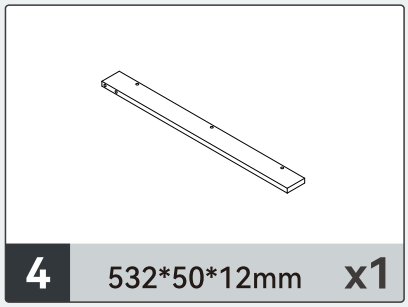

4	532*50*12mm	x1

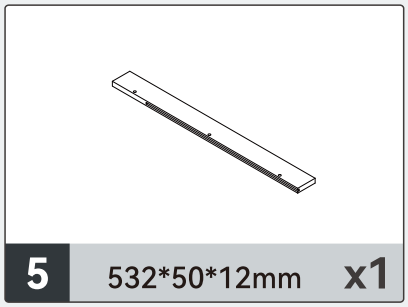

5	532*50*12mm	x1

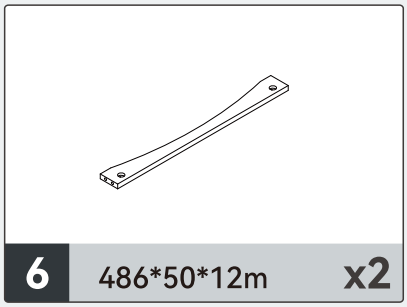

6	486*50*12m	x2

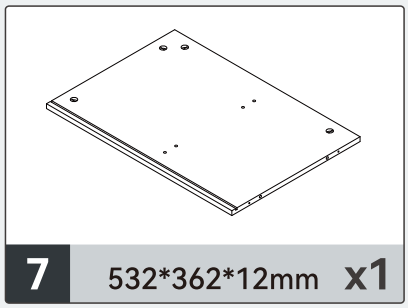

7	532*362*12mm	x1

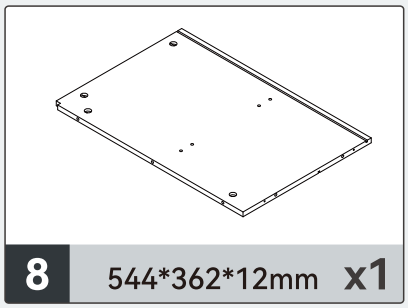

8	544*362*12mm	x1

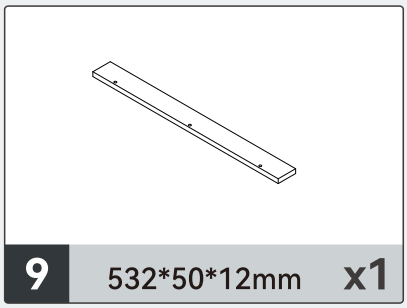

9	532*50*12mm	x1

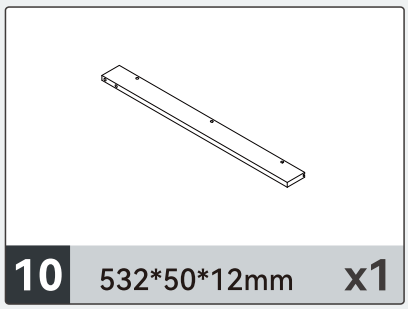

10	532*50*12mm	x1

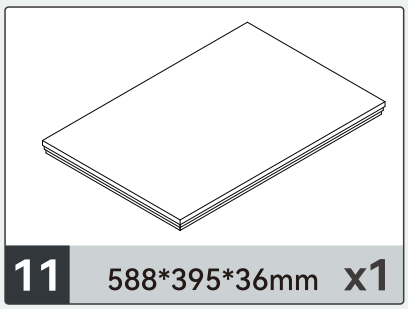

11	588*395*36mm	x1

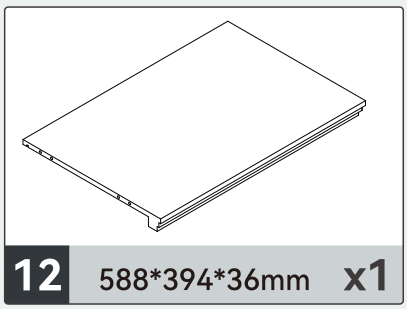

12	588*394*36mm	x1

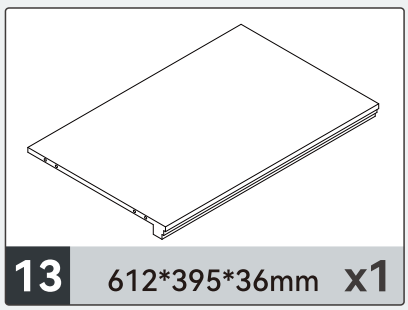

13	612*395*36mm	x1

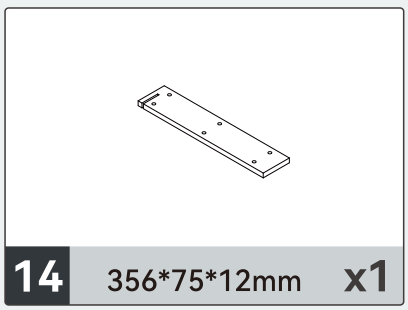

14	356*75*12mm	x1

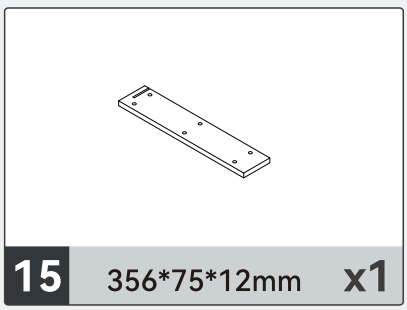

15	356*75*12mm	x1

Email : **service@grandtunnel.com**

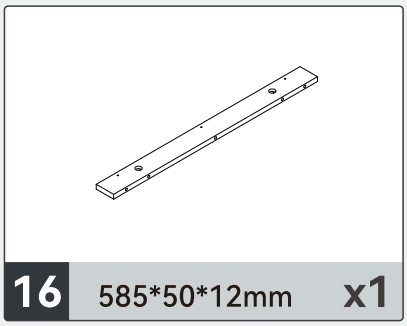

16 585*50*12mm x1

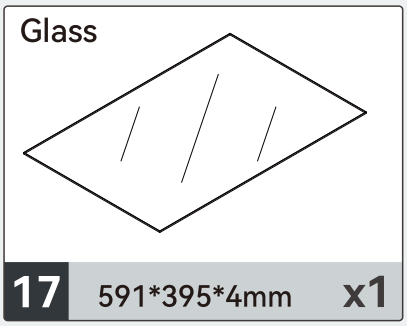

17 591*395*4mm x1

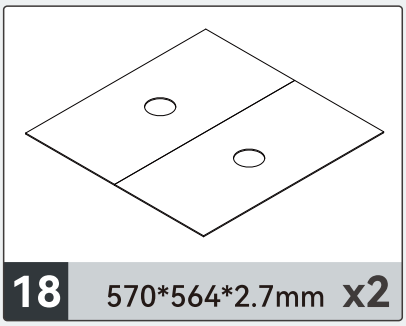

18 570*564*2.7mm x2

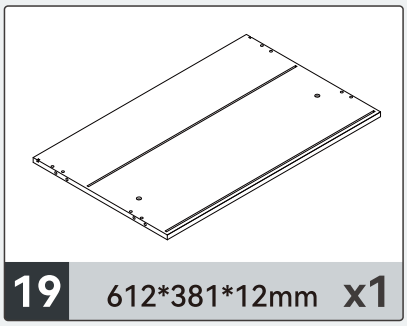

19 612*381*12mm x1

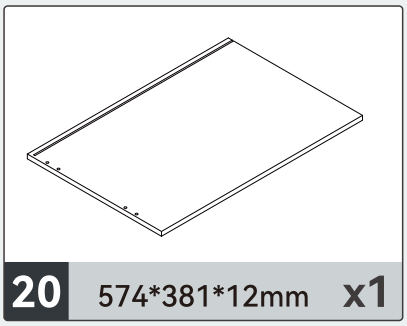

20 574*381*12mm x1

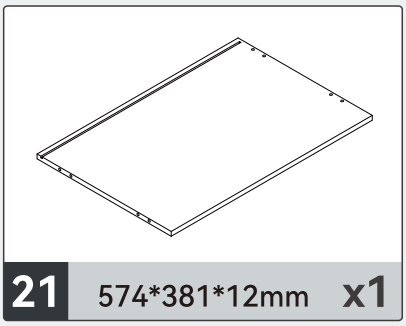

21 574*381*12mm x1

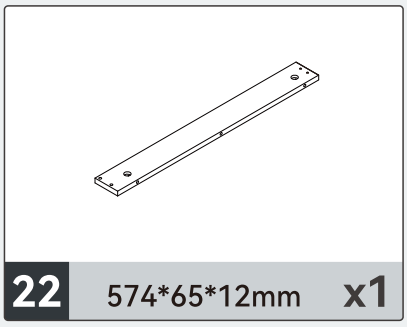

22 574*65*12mm x1

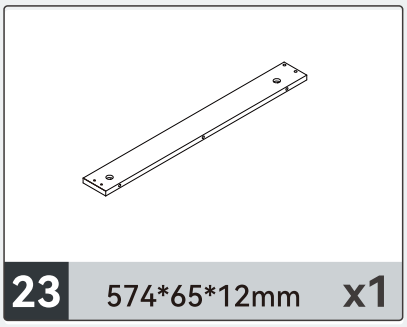

23 574*65*12mm x1

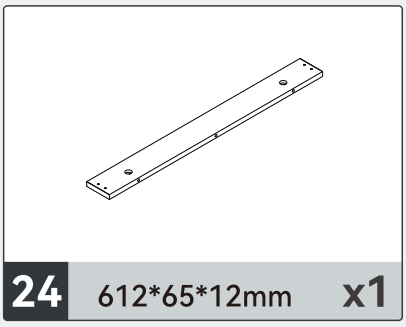

24 612*65*12mm x1

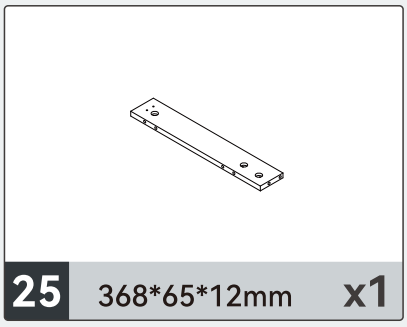

25 368*65*12mm x1

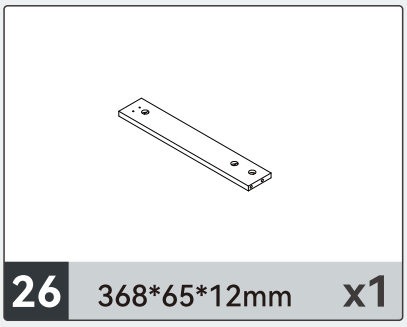

26 368*65*12mm x1

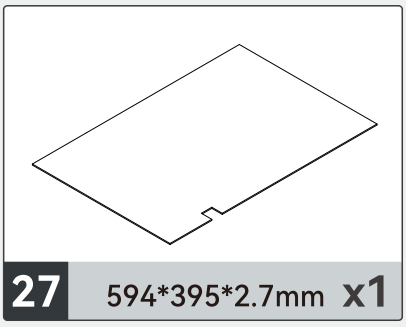

27 594*395*2.7mm x1

EN

Parts List - Fittings

Please check you have all the fittings listed below.

Note: The quantities below are the correct amount to complete the assembly. In some cases more fittings may be supplied are required.

 **A** Ø7x37mm **x50**	 **B** Ø15x9.6mm **x50**	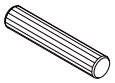 **C** Ø6x30mm **x44**
 **D** Ø3.5x12mm **x16**	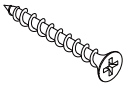 **E** Ø5x40mm **x8**	 **F** Ø4x10mm **x10**
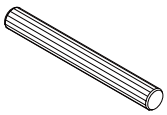 **G** Ø6x50mm **x8**	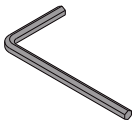 **H** Allen Key **x1**	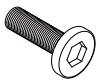 **I** Ø6x20mm **x12**
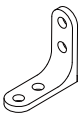 **J** L shape bracket **x2**	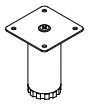 **K** Adjustable Foot (Hx65mm) **x2**	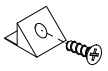 **L** Ø3x16mm **x12**
 **M** Ø4x8mm **x2**	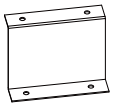 **N** Z Shaped Corner Bracket **x1**	 **O** Wall Fixing Pack **x2**
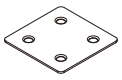 **P** Metal Connector Plate **x2**		

Email : **service@grandtunnel.com**

Tools required

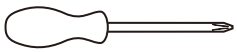

Phillips screwdriver
(medium & large)

Ruler

Use this ruler to help correctly identify the screws

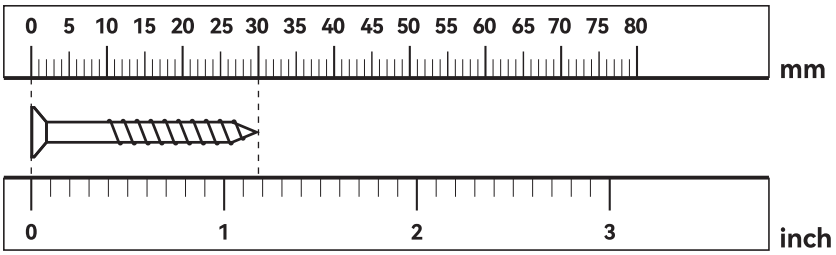

The screws length is measured from the head to the point (30mm screw shown).

EN

Parts List - Fireplace

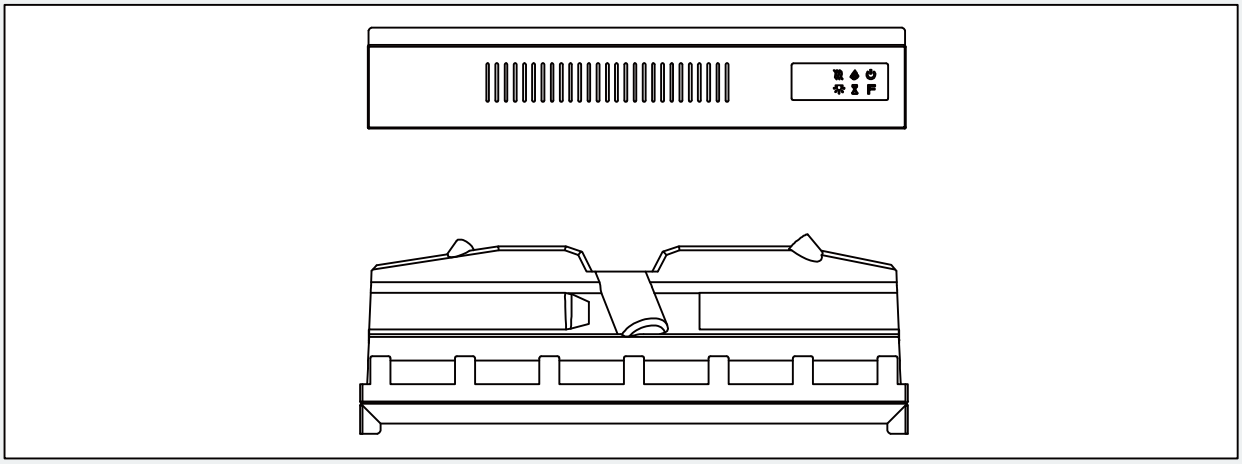

BOX1

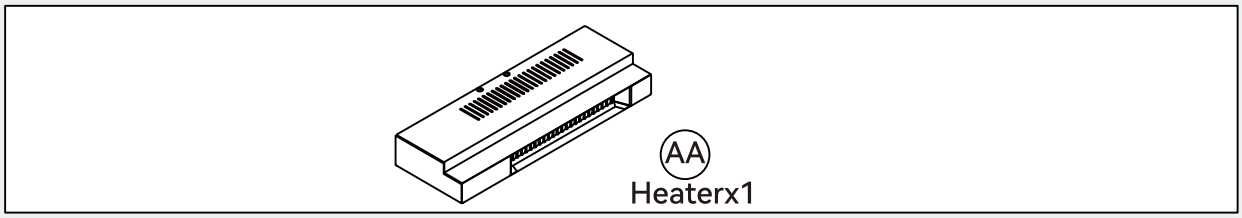

BOX2

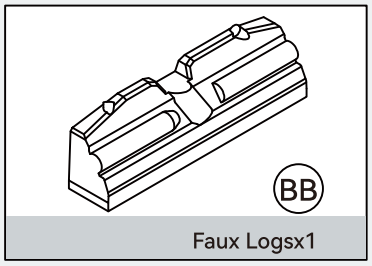

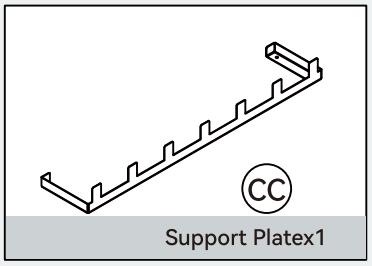

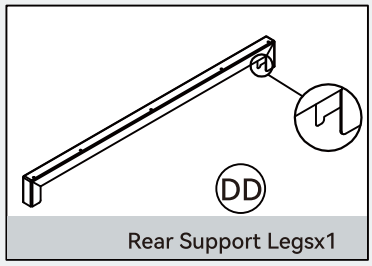

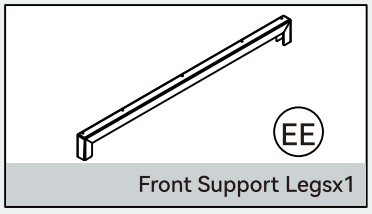

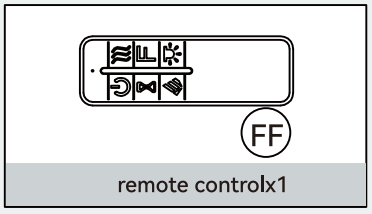

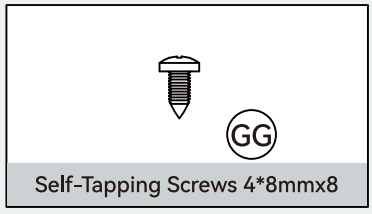

BOX3

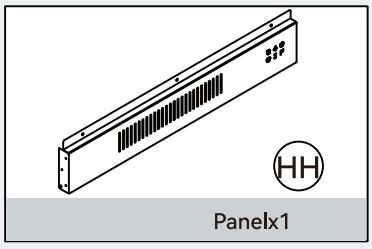

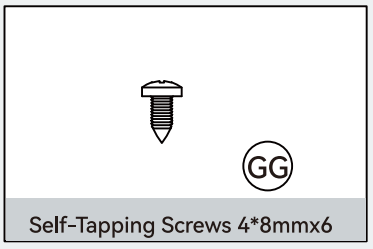

CAUTION Do not attempt to install from the front of the cabinet, as this will prevent proper installation.

Email : **service@grandtunnel.com**

Using Camlocks

EN

Step 1

Connect the male camlock as diected in the assembly instructions using a scewdriver.

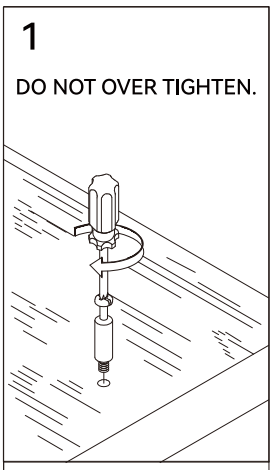

Step 2

Push the male camlock into the entry hole.

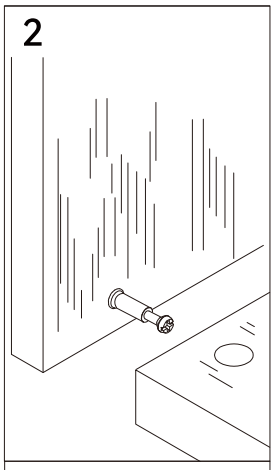

Step 3

Insert the female camlock as shown in the instruction.

Note: ensure that the arrow on the top of the camlock points towards the entry hole for the male camlock.

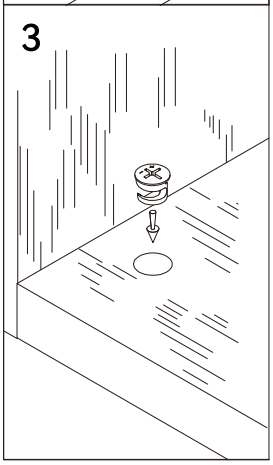

Step 4

Turn the female camlock clockwise with a screwdriver.

You should feel a click when the camlock is locked in place.
The joint is now secure.

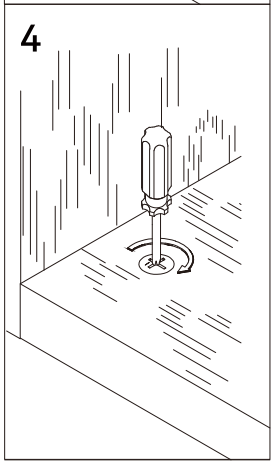

EN

Assembly Instructions

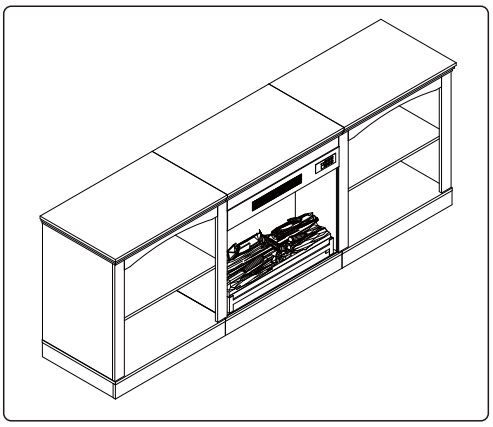

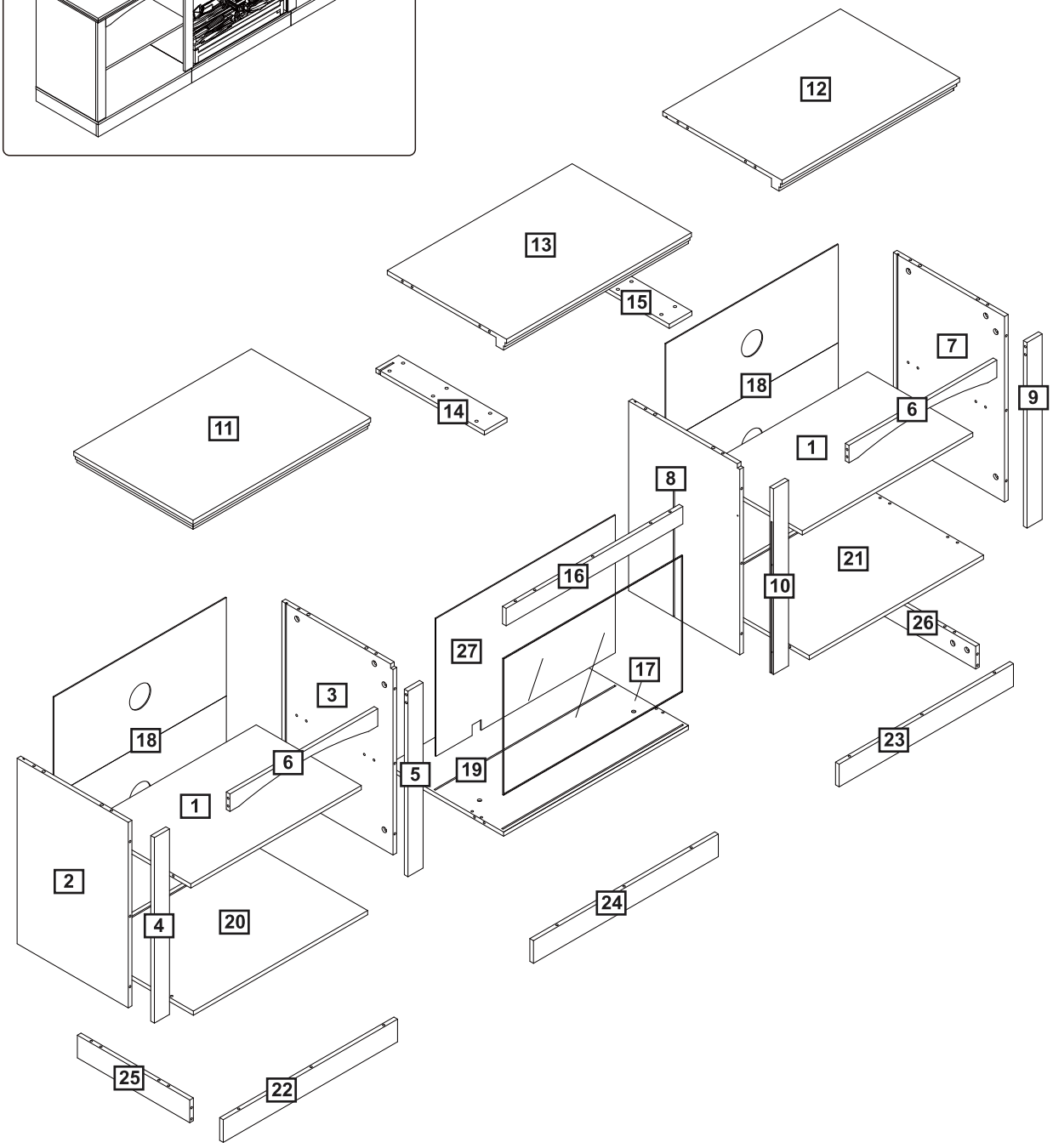

Email : **service@grandtunnel.com**

Step 1

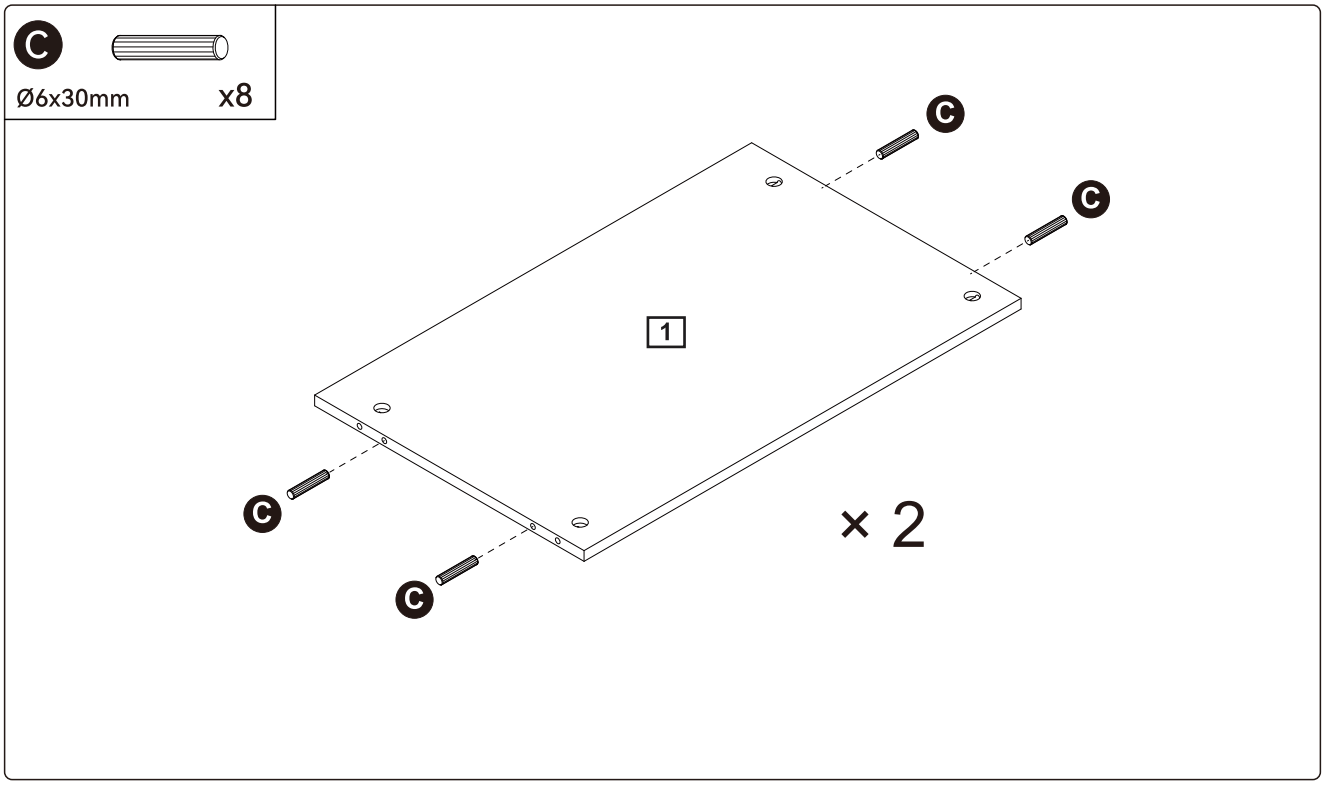

Insert C into panel (1).

Step 2

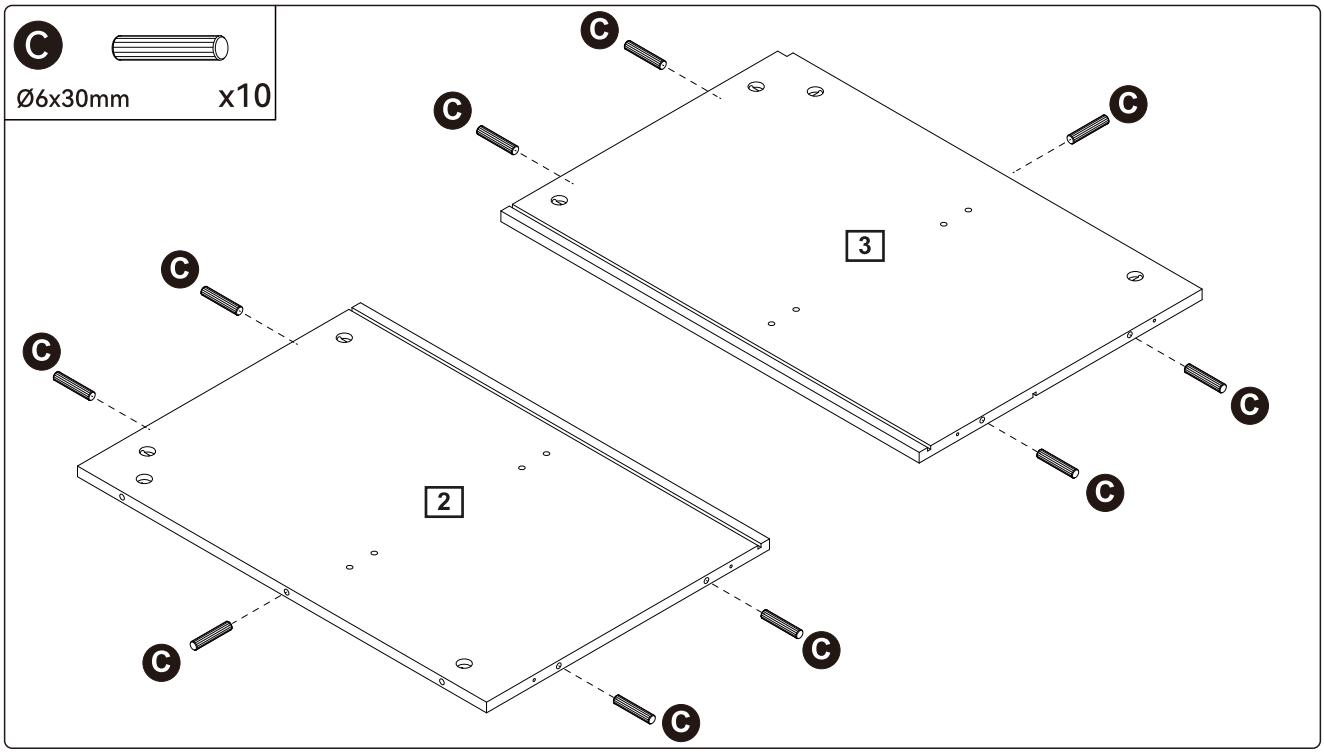

Insert C into panels (2, 3).

Step 3

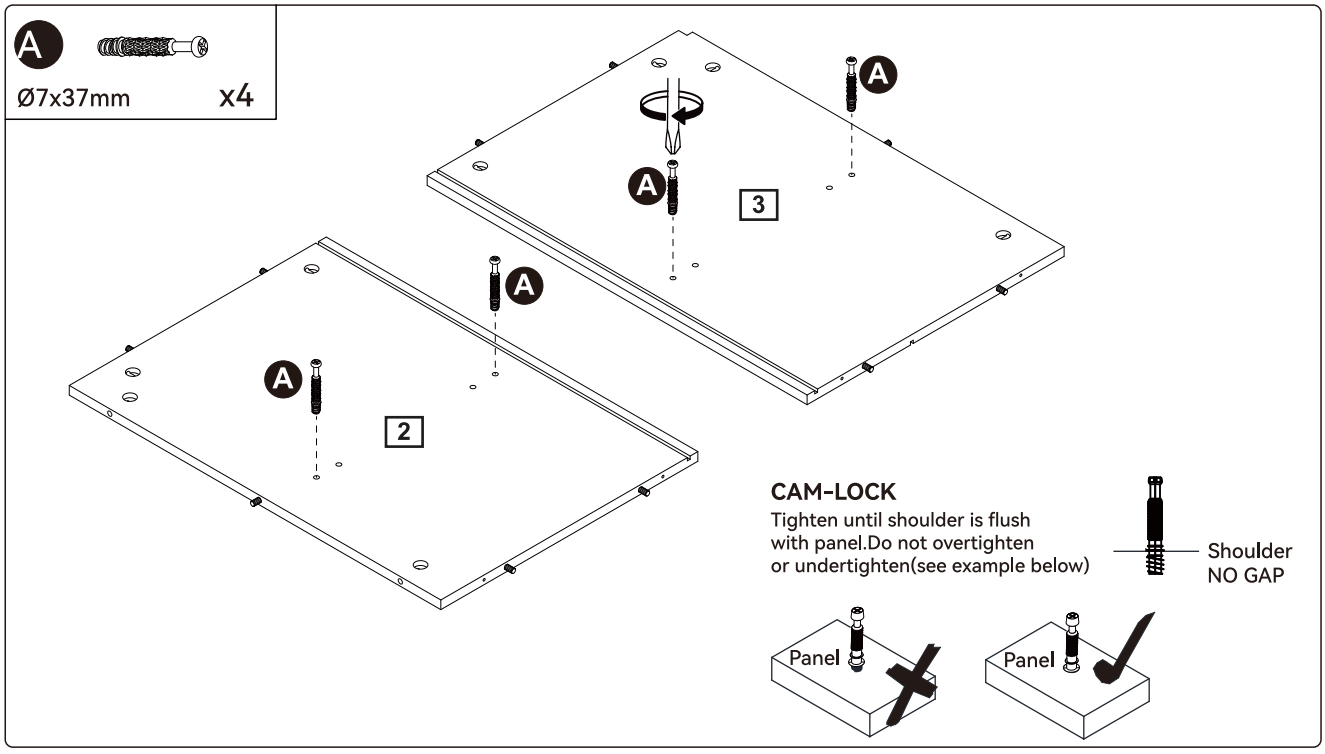

Insert A into panels (2, 3).

Step 4

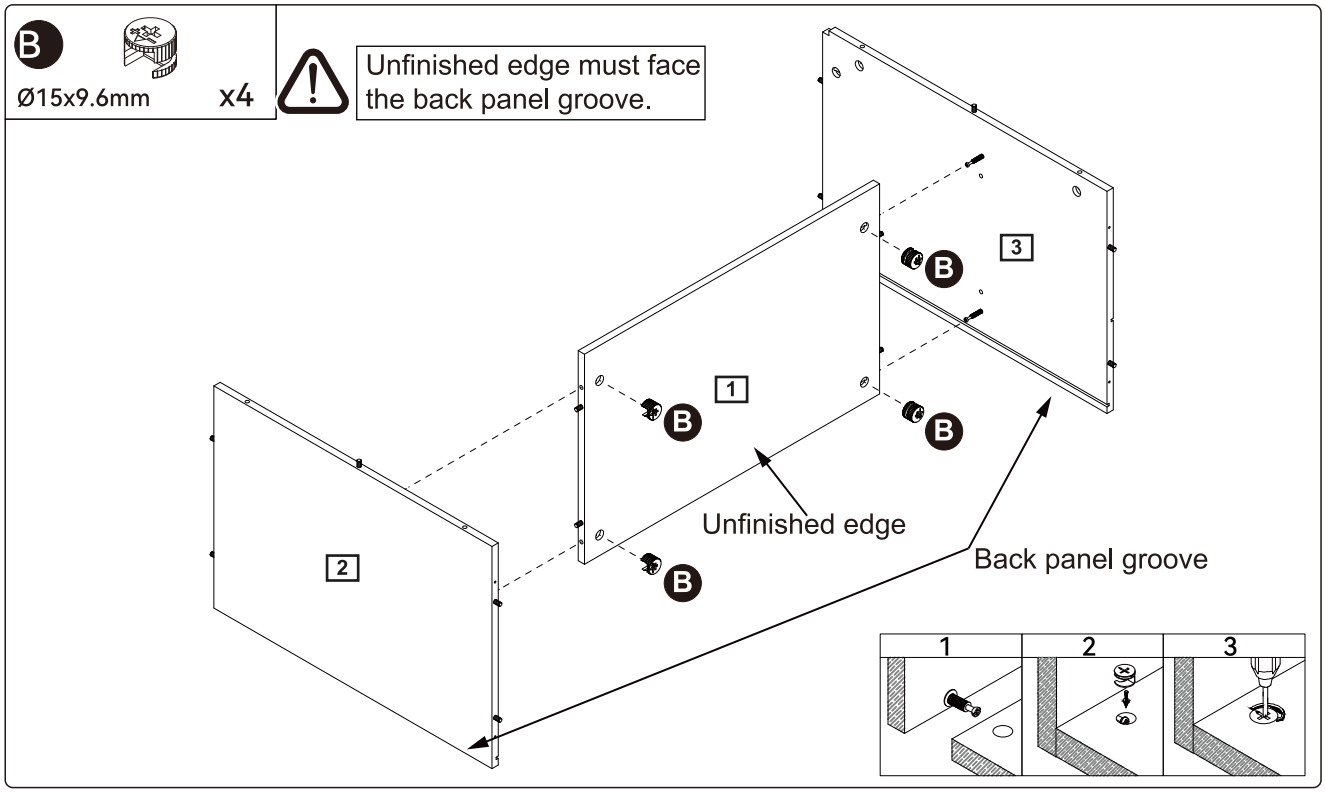

Install panels (2, 3) onto panel (1). Insert B into panel (1) and secure it.

Email : **service@grandtunnel.com**

Step 5

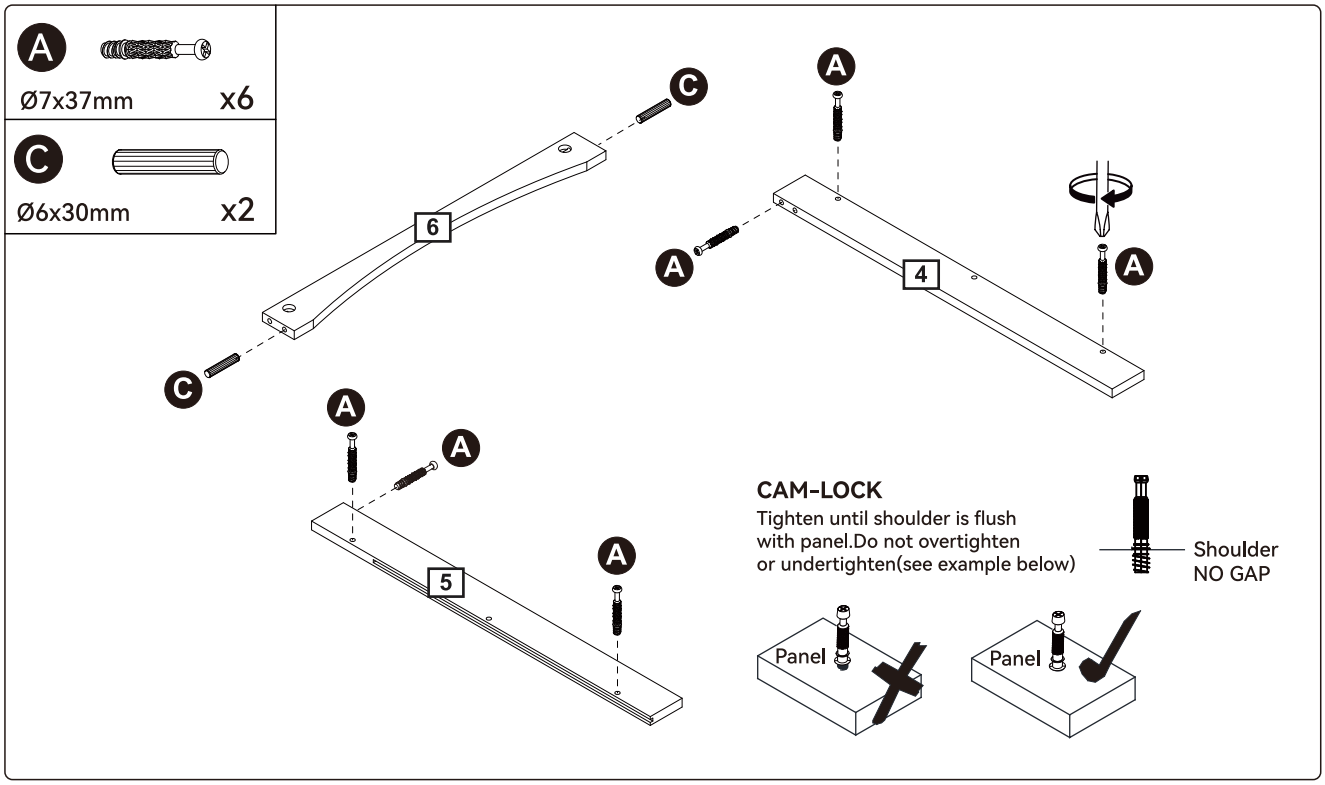

Insert A into panels (4, 5).
Insert C into panels (6).

Step 6

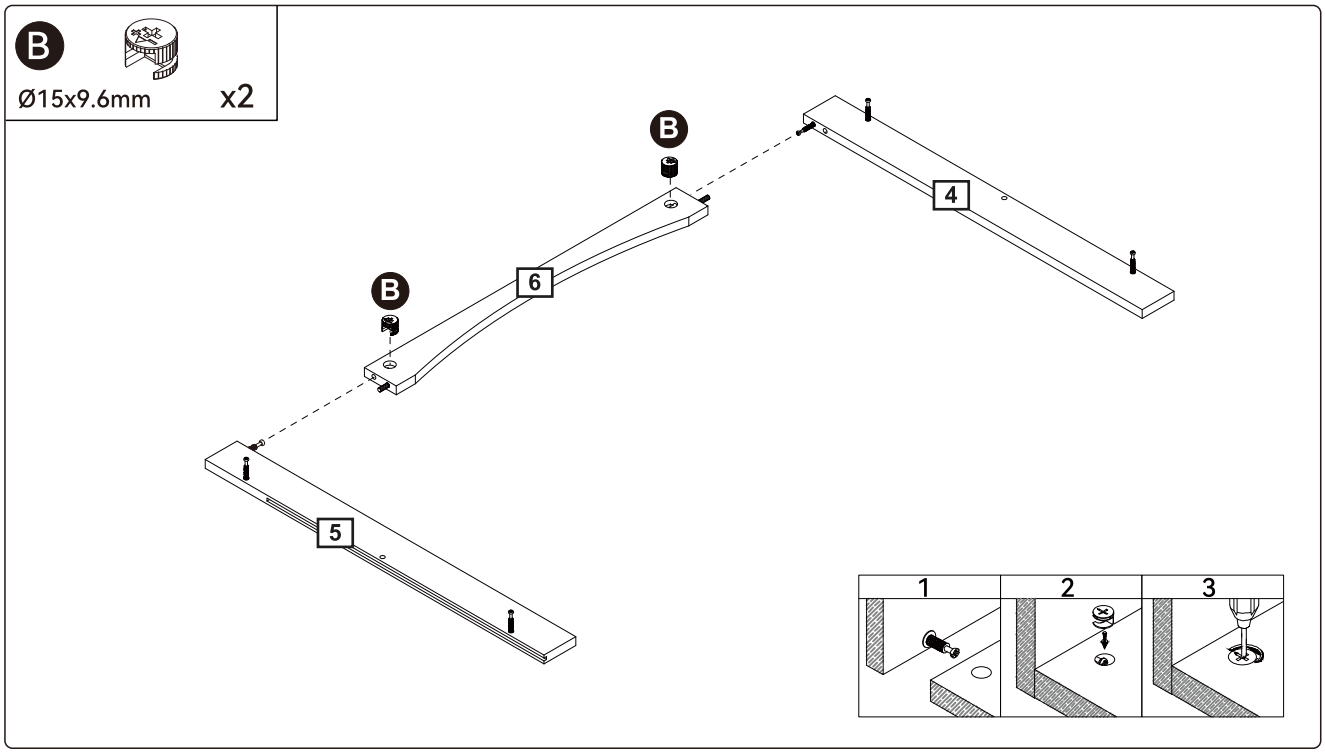

Install panels (4, 5) onto panel (6). Insert B into panel (6) and secure it.

Step 7

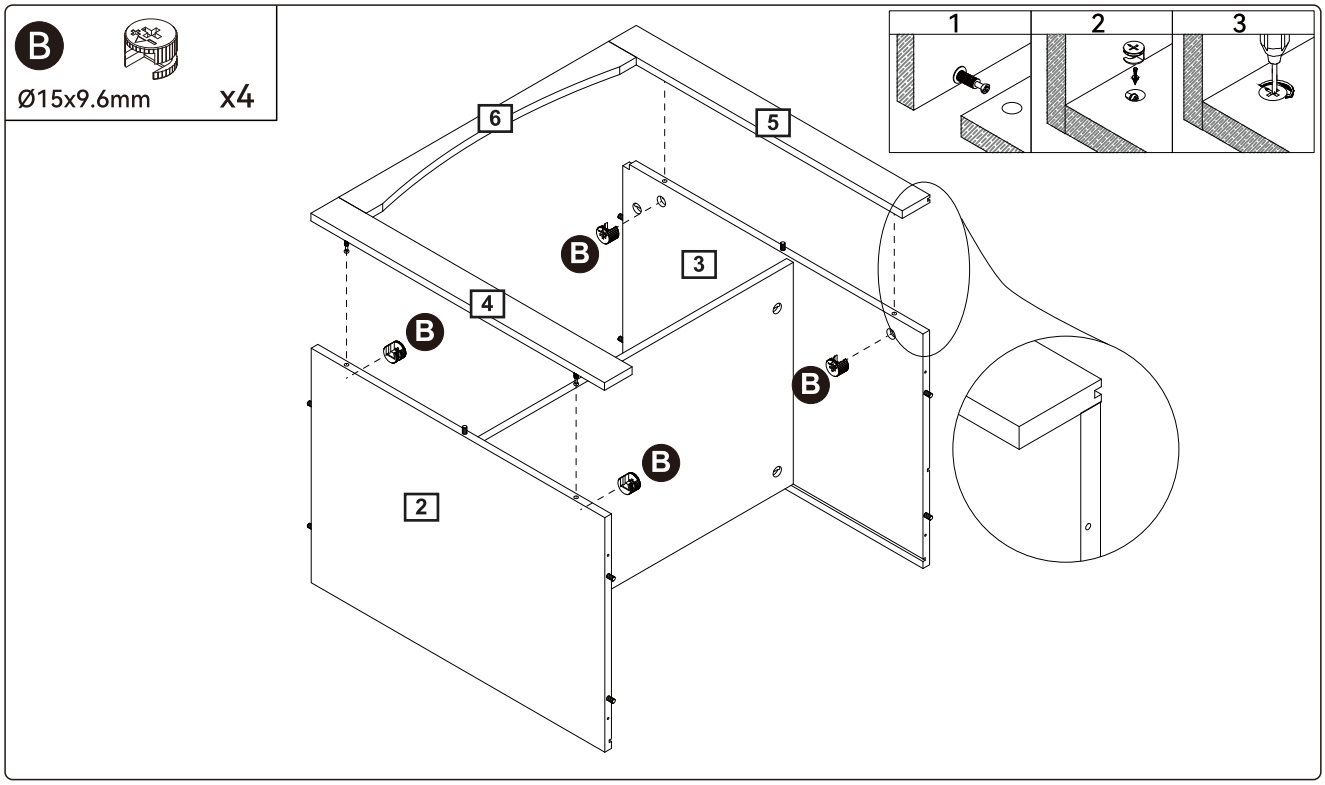

Install panels (4, 5) onto panels (2, 3). Insert B into panels (2, 3) and secure it.

Step 8

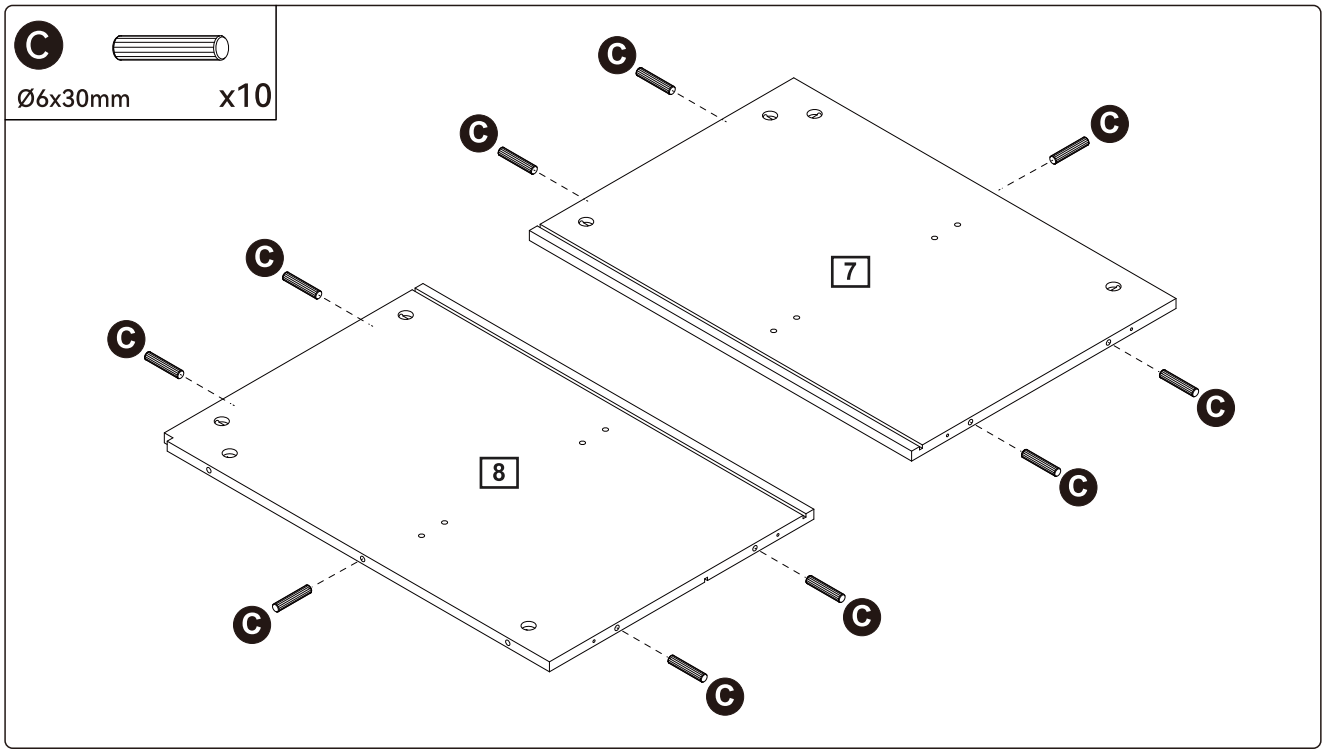

Insert C into panels (7, 8).

Email : **service@grandtunnel.com**

Step 9

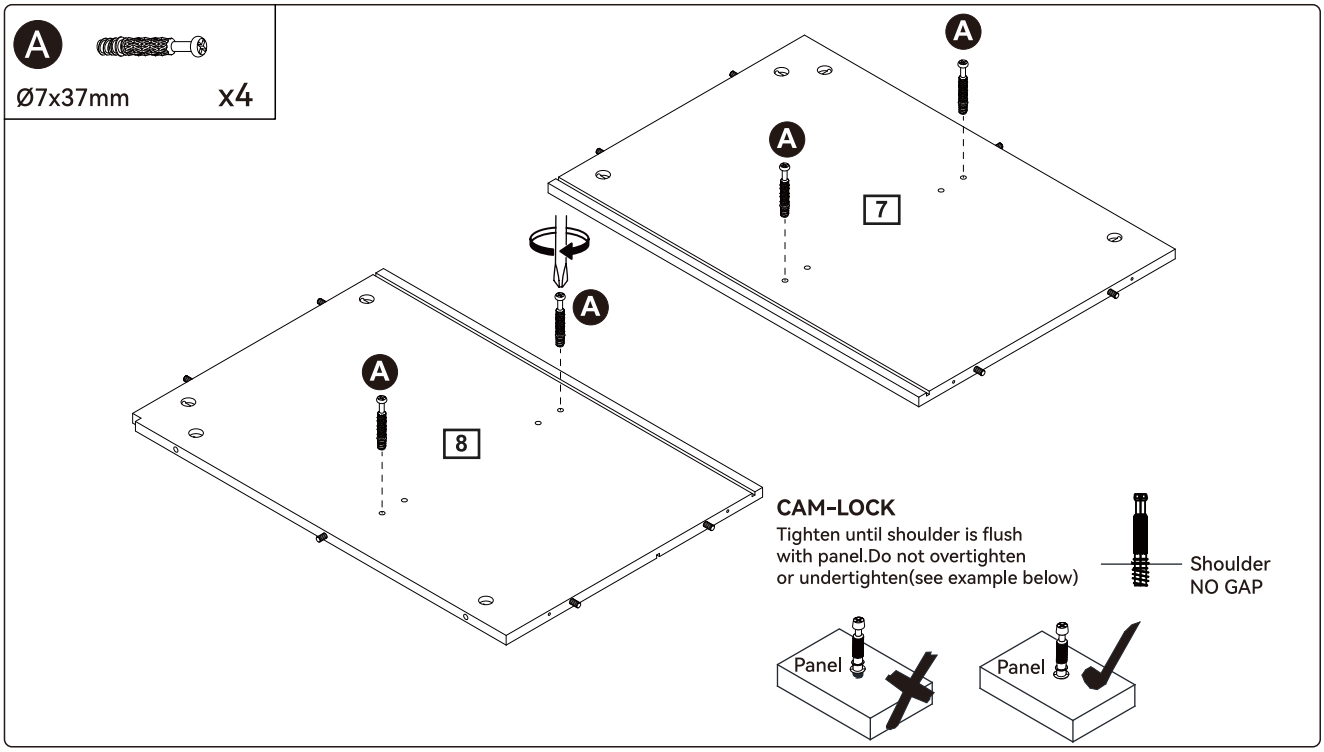

Insert A into panels (7, 8).

Step 10

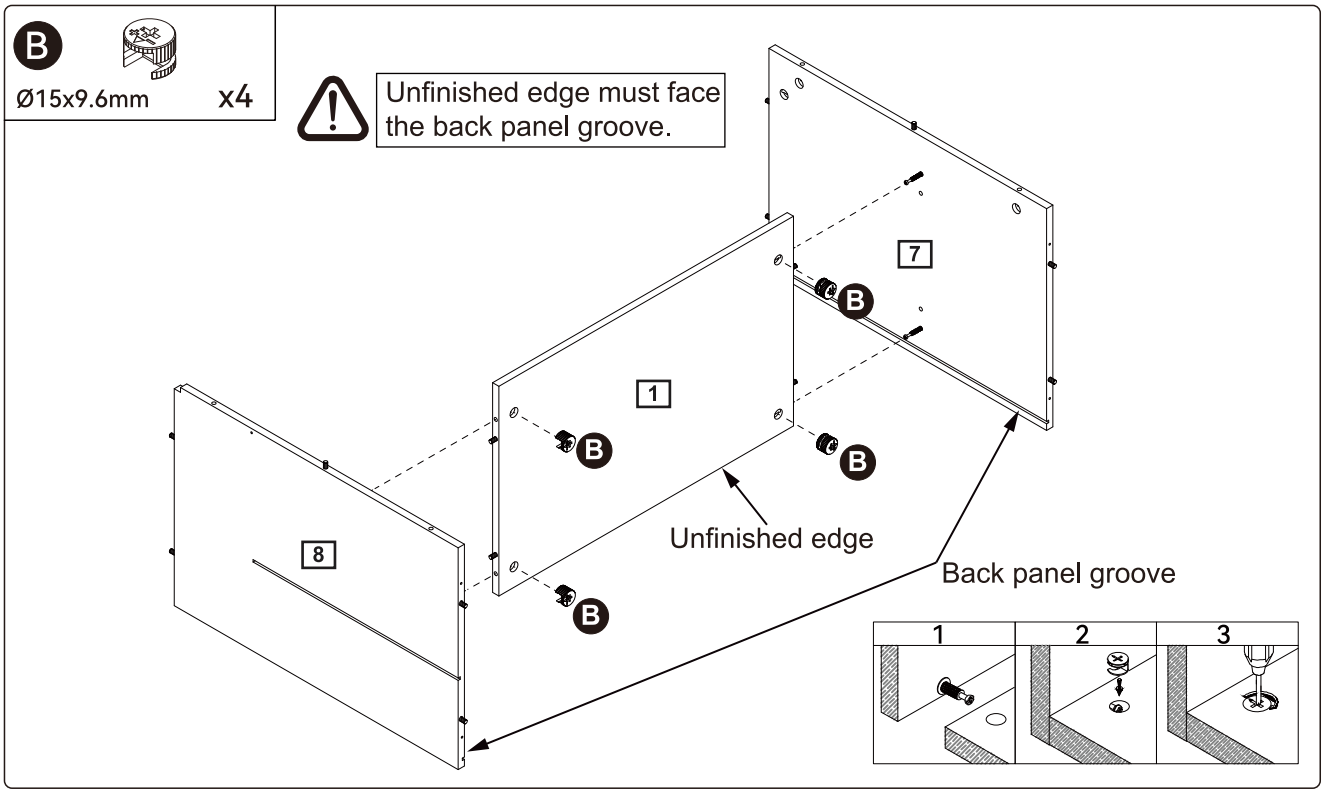

Install panels (7, 8) onto panel (1). Insert B into panel (1) and secure it.

Step 11

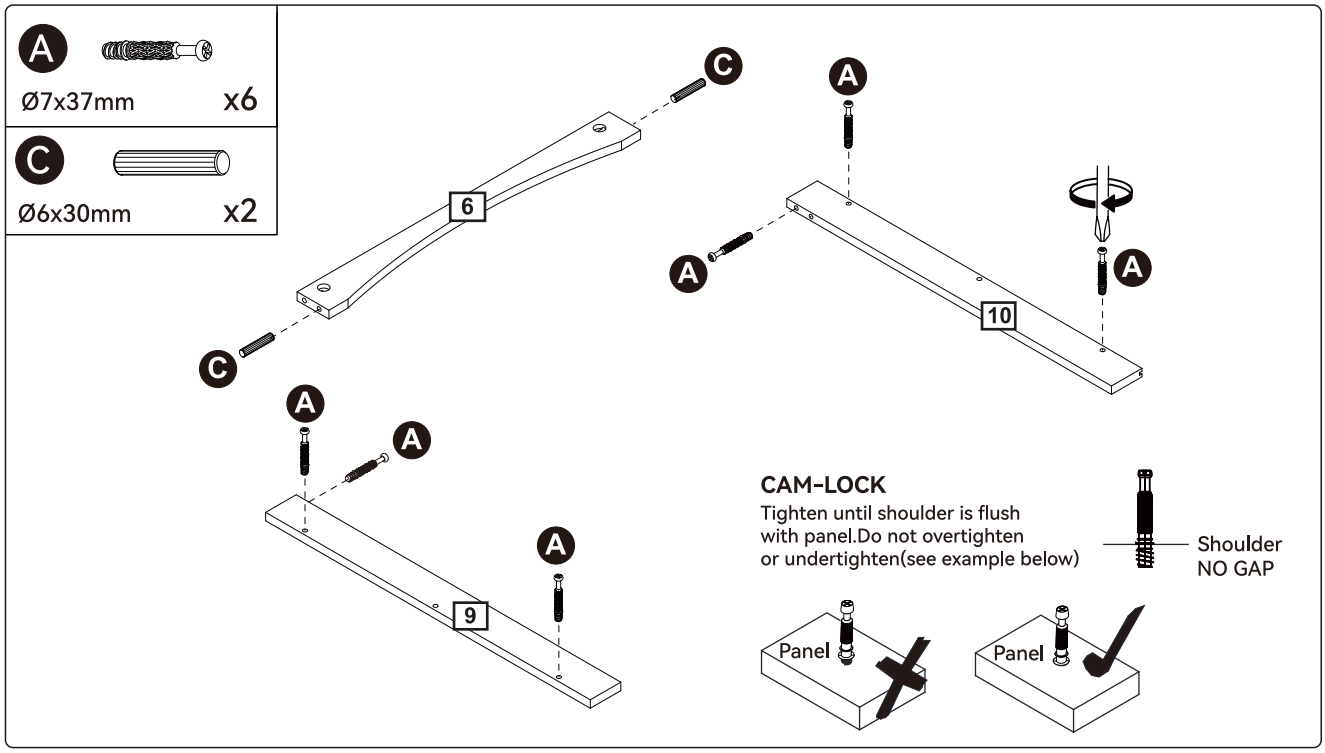

Insert A into panels (9, 10).
Insert C into panels (6).

Step 12

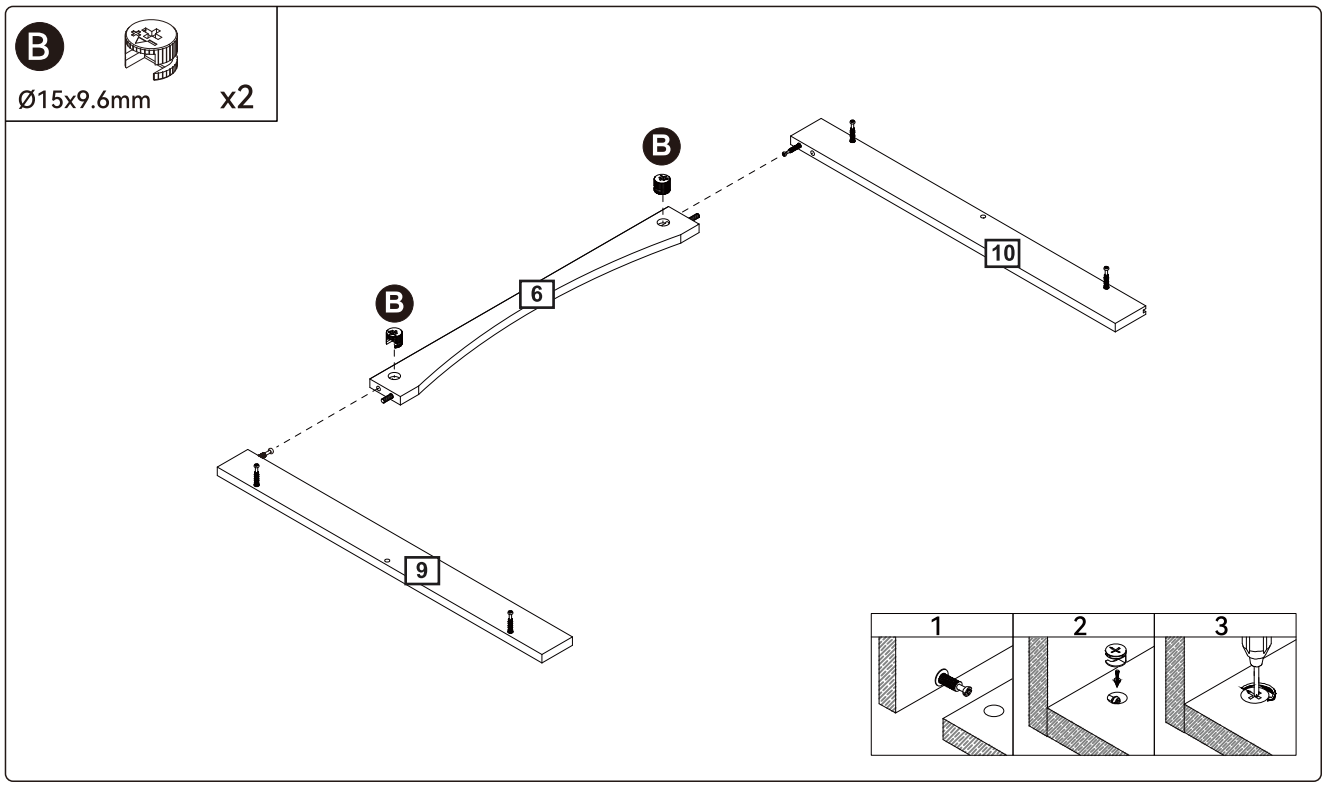

Install panels (9, 10)onto panel (6). Insert B into panel (6) and secure it.

Email : **service@grandtunnel.com**

Step 13

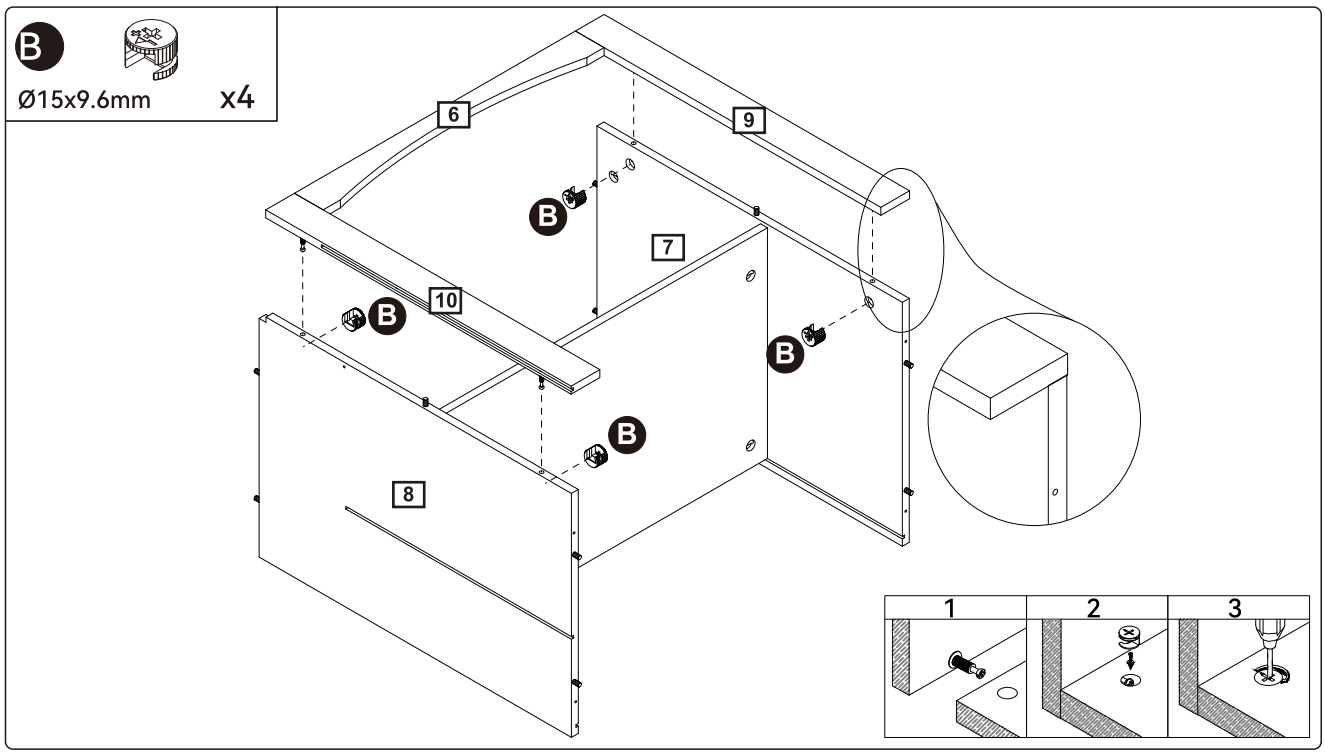

Install panels (9, 10) onto panels (7, 8). Insert B into panels (7, 8) and secure it.

Step 14

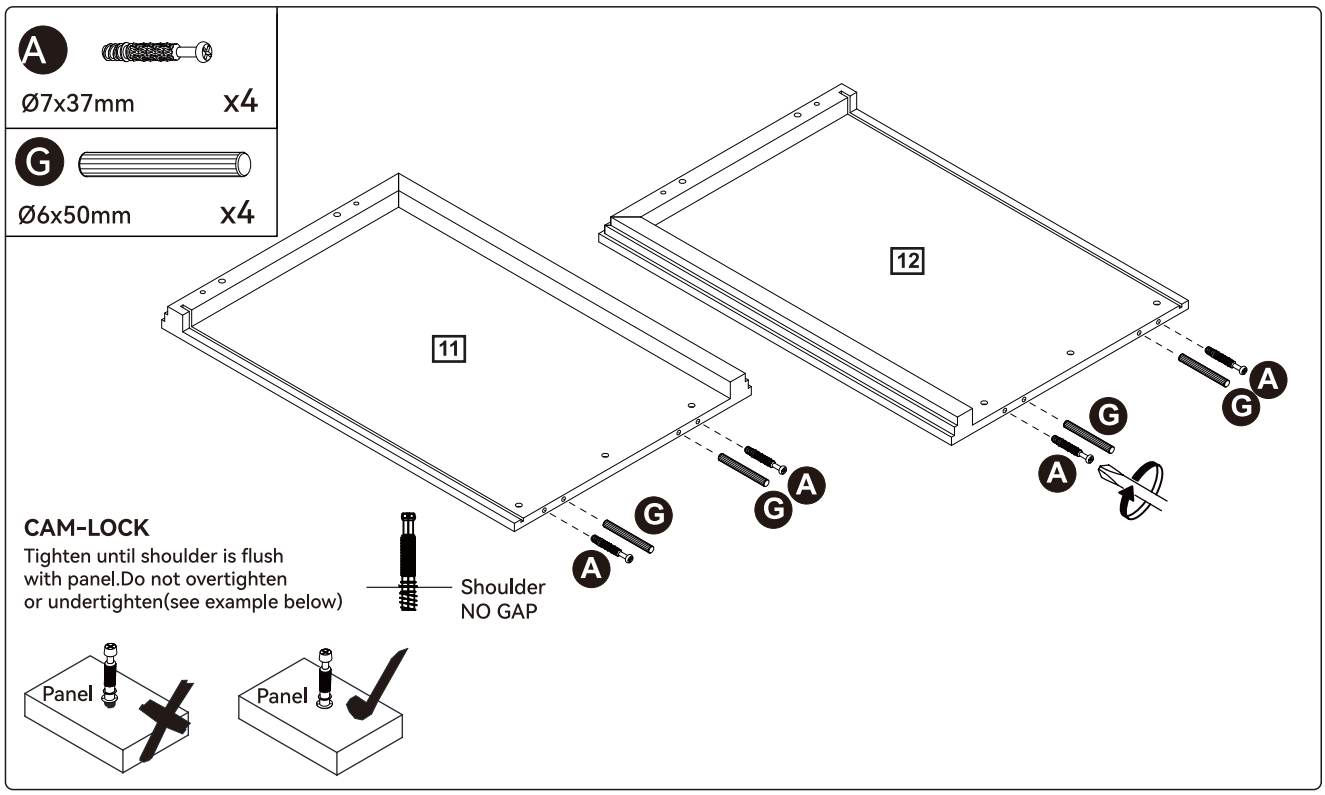

Insert A into panels (11, 12).
Insert G into panels (11, 12).

Step 15

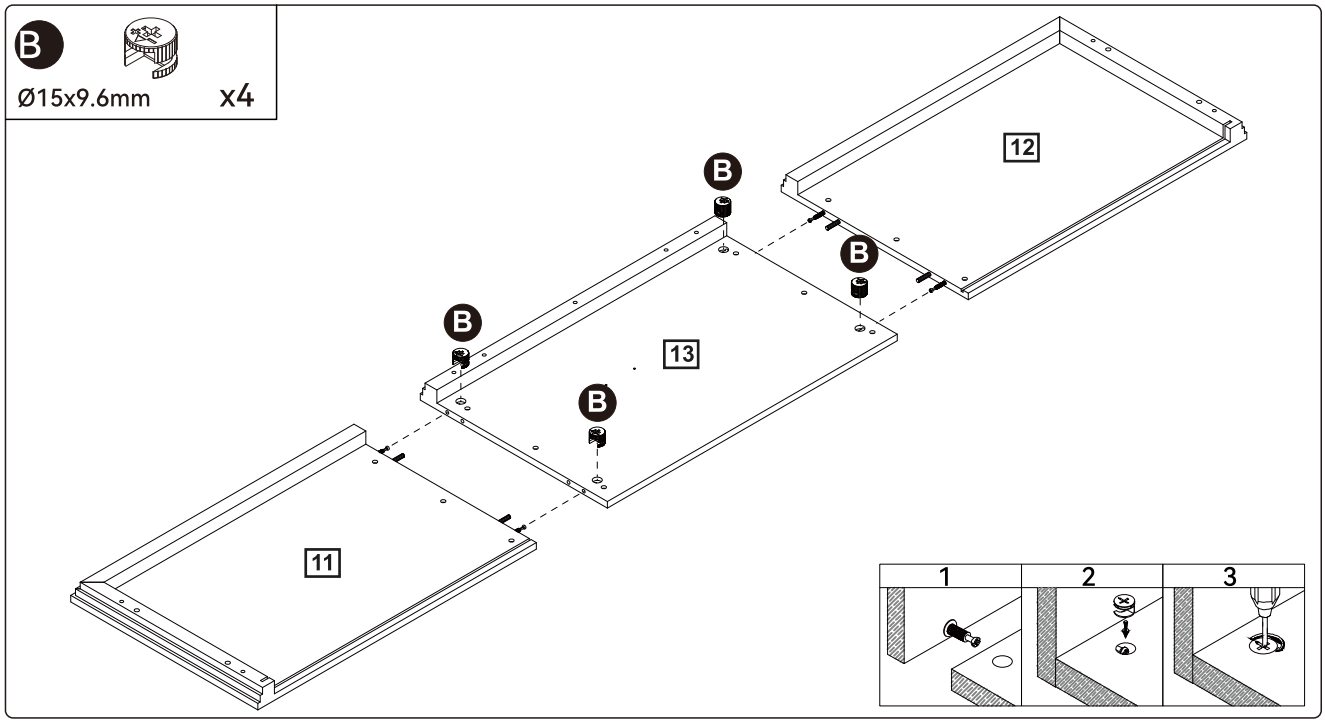

Install panels (11, 12) onto panel (13). Insert B into panel (13) and secure it.

Step 16

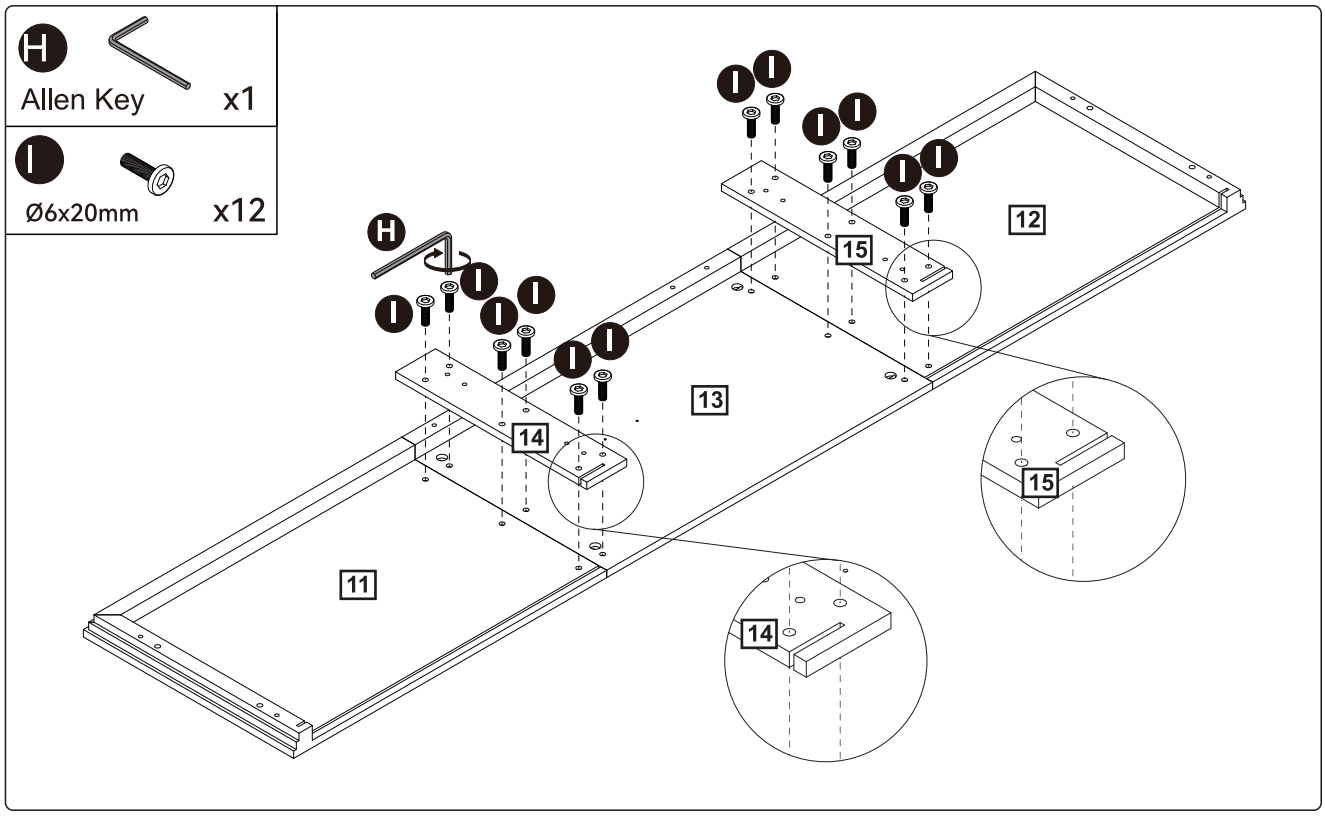

Install I onto panels (14, 15), securing it with allen key H.

Email : **service@grandtunnel.com**

Step 17

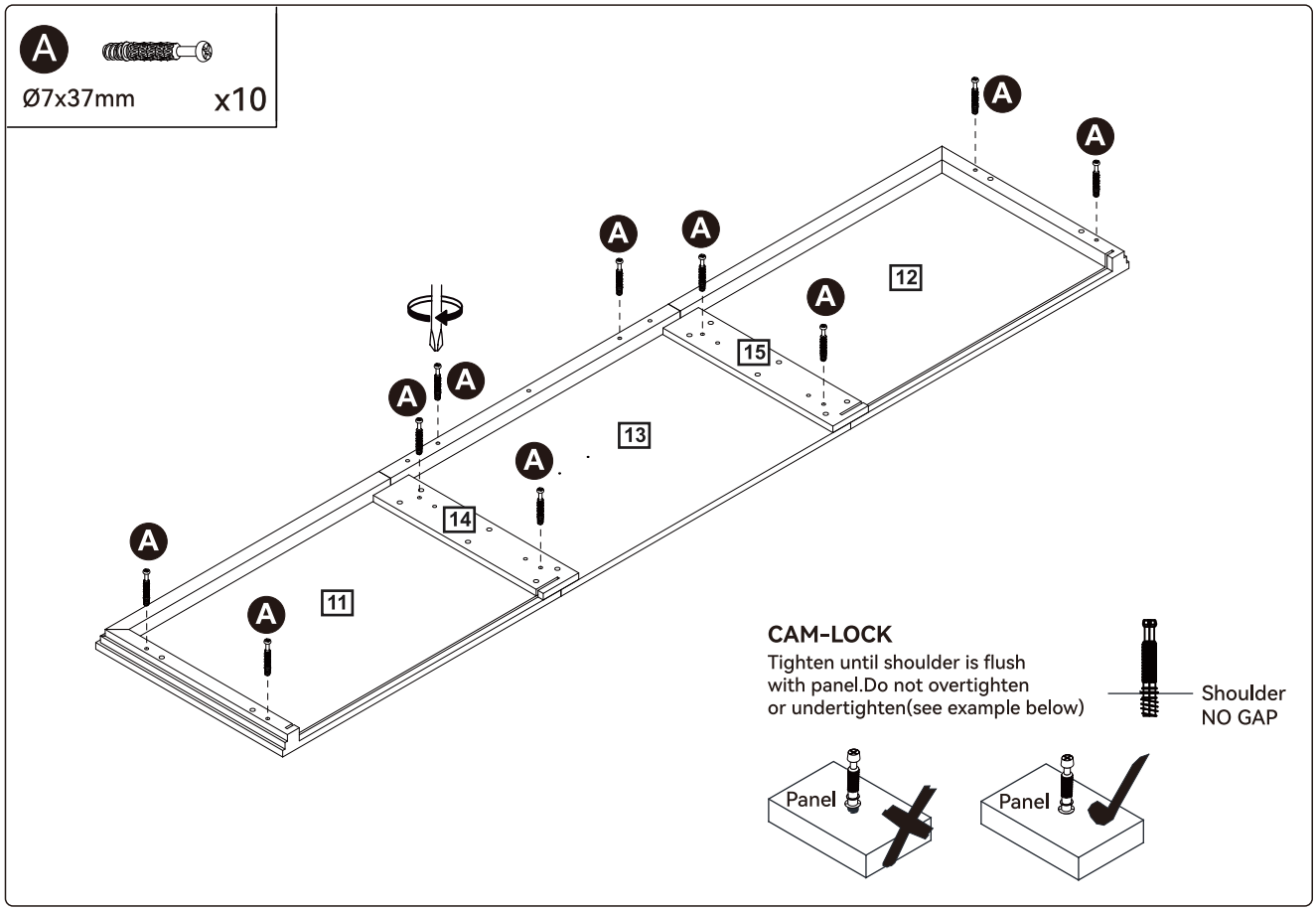

Insert A into panels (11, 12, 13, 14, 15).

Step 18

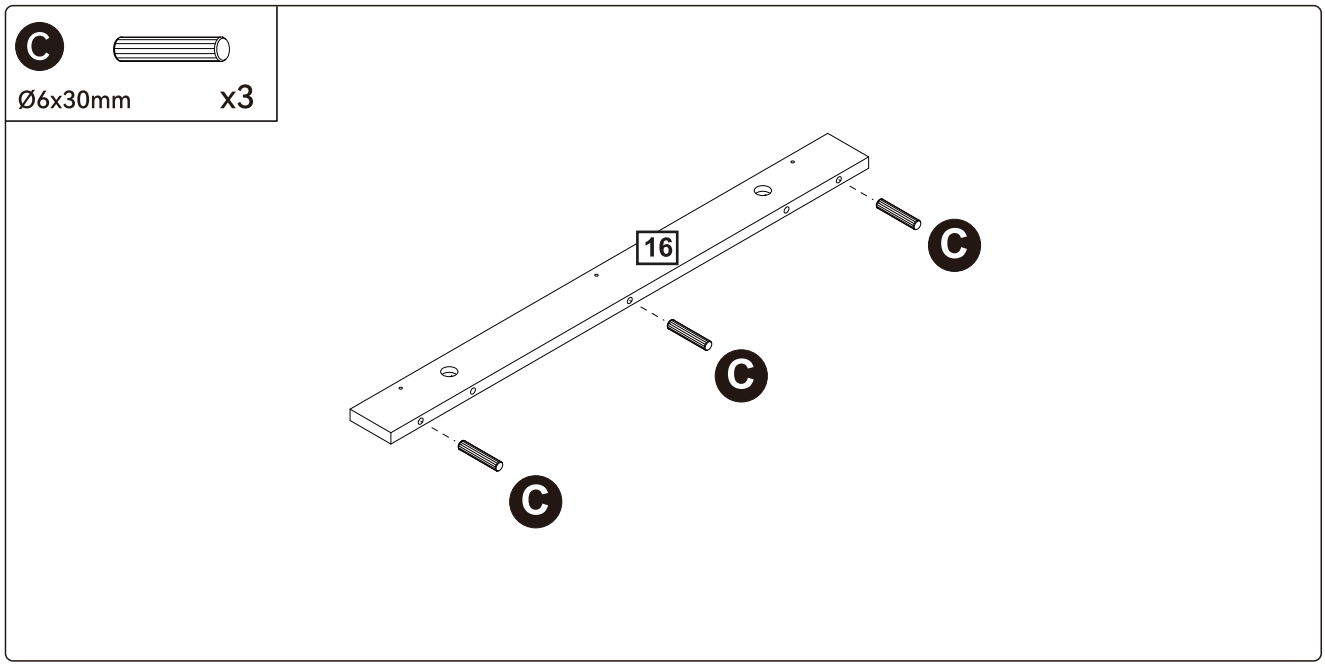

Insert C into panel (16).

Step 19

B



Ø15x9.6mm x2

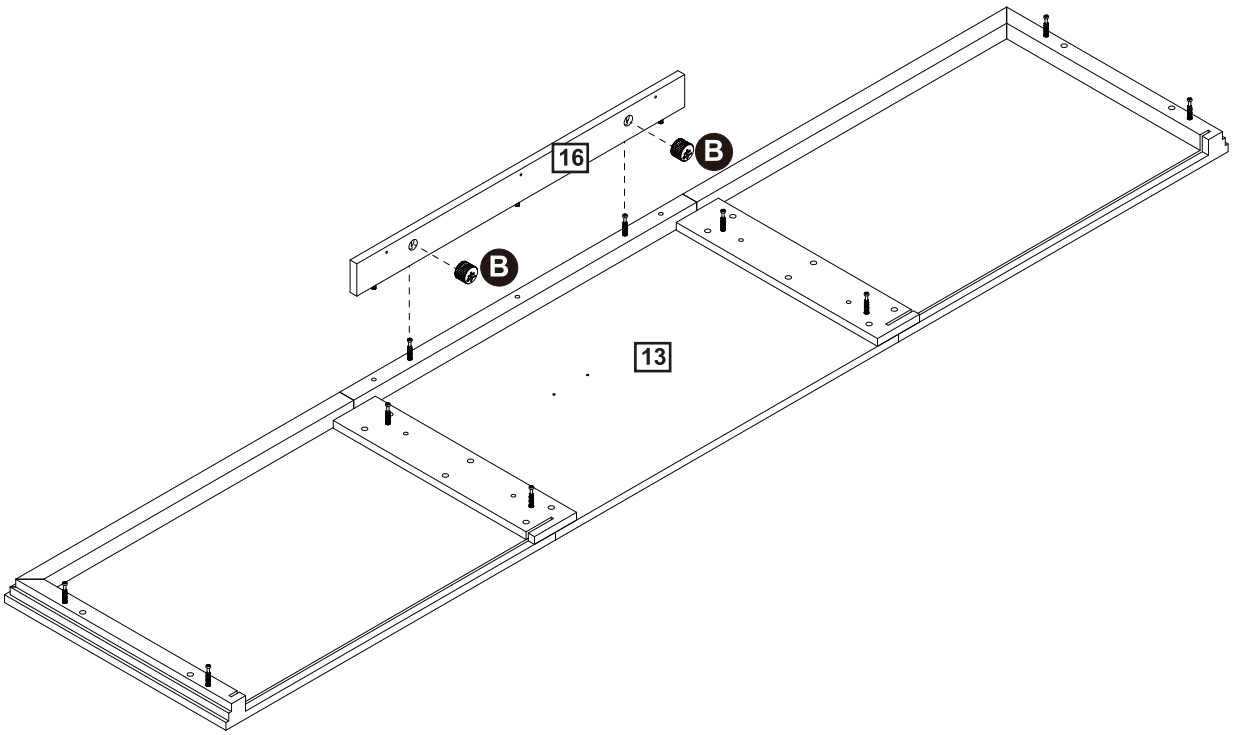

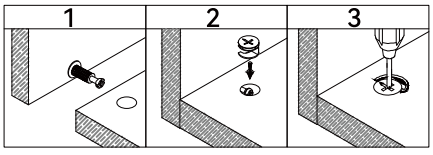

Install panel (16) onto panel (13). Insert B into panel (16) and secure it.

Email : **service@grandtunnel.com**

Step 20

B



Ø15x9.6mm x4

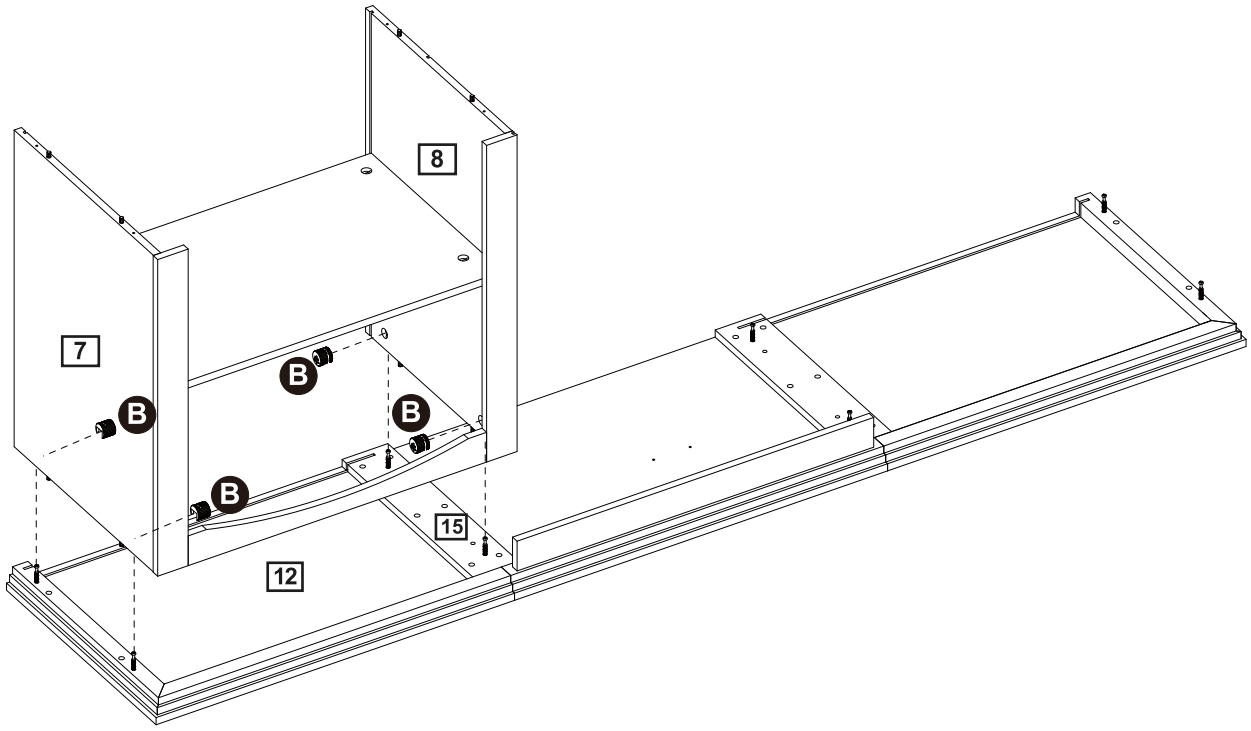

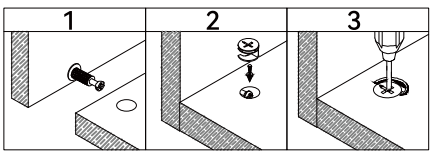

Install panels (7, 8) onto panels (12, 15). Insert B into panels (7, 8) and secure it.

EN

Step 21

B



Ø15x9.6mm x4

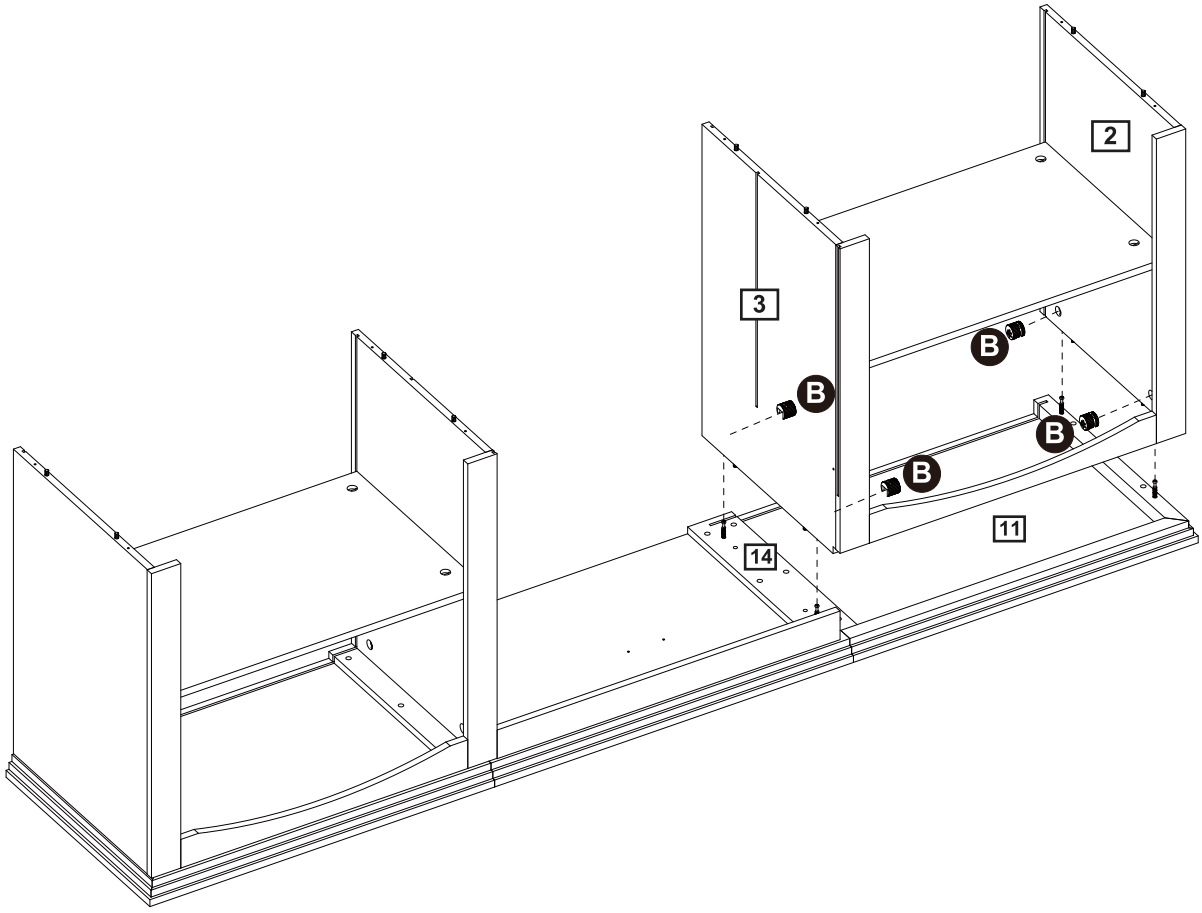

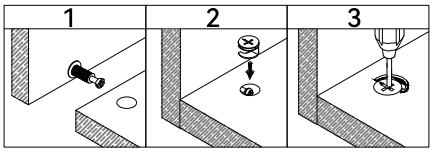

Install panels (2, 3) onto panels (11, 14). Insert B into panels (2, 3) and secure it.

Email : **service@grandtunnel.com**

Step 22

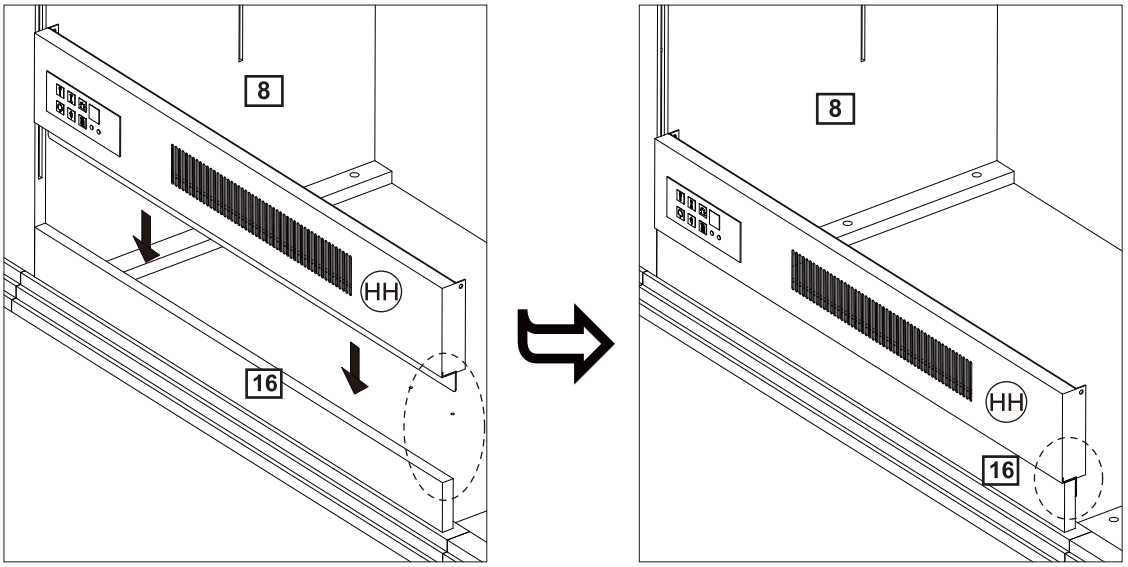

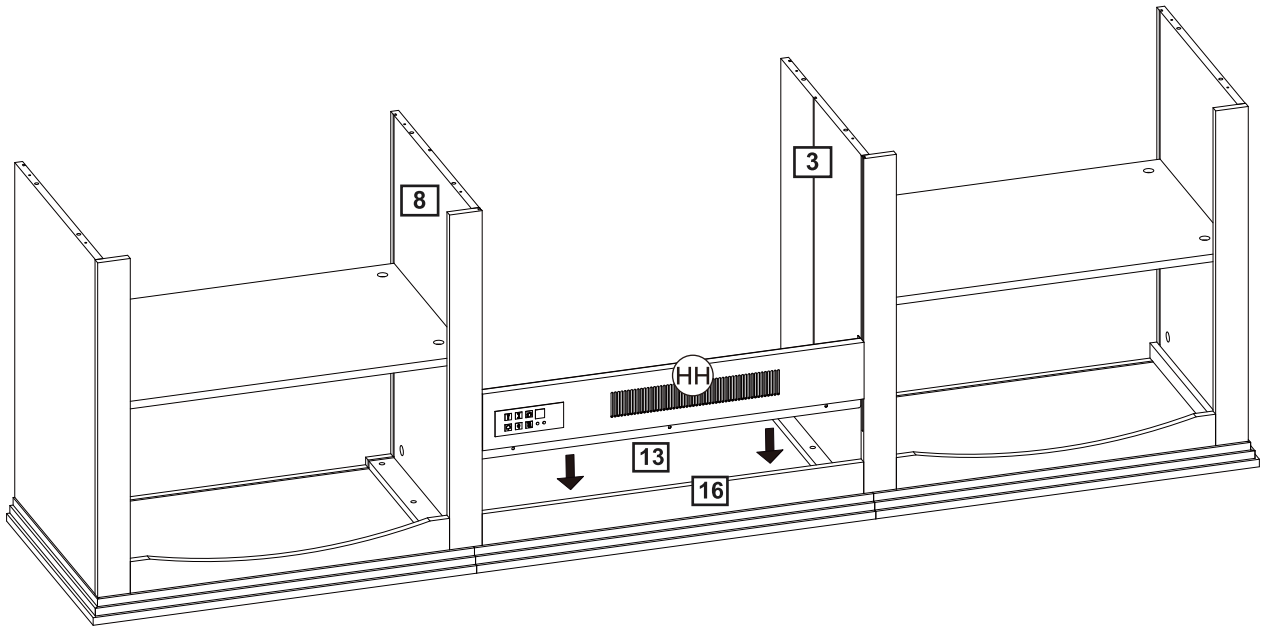

Install HH onto panel (16).

EN

Step 23

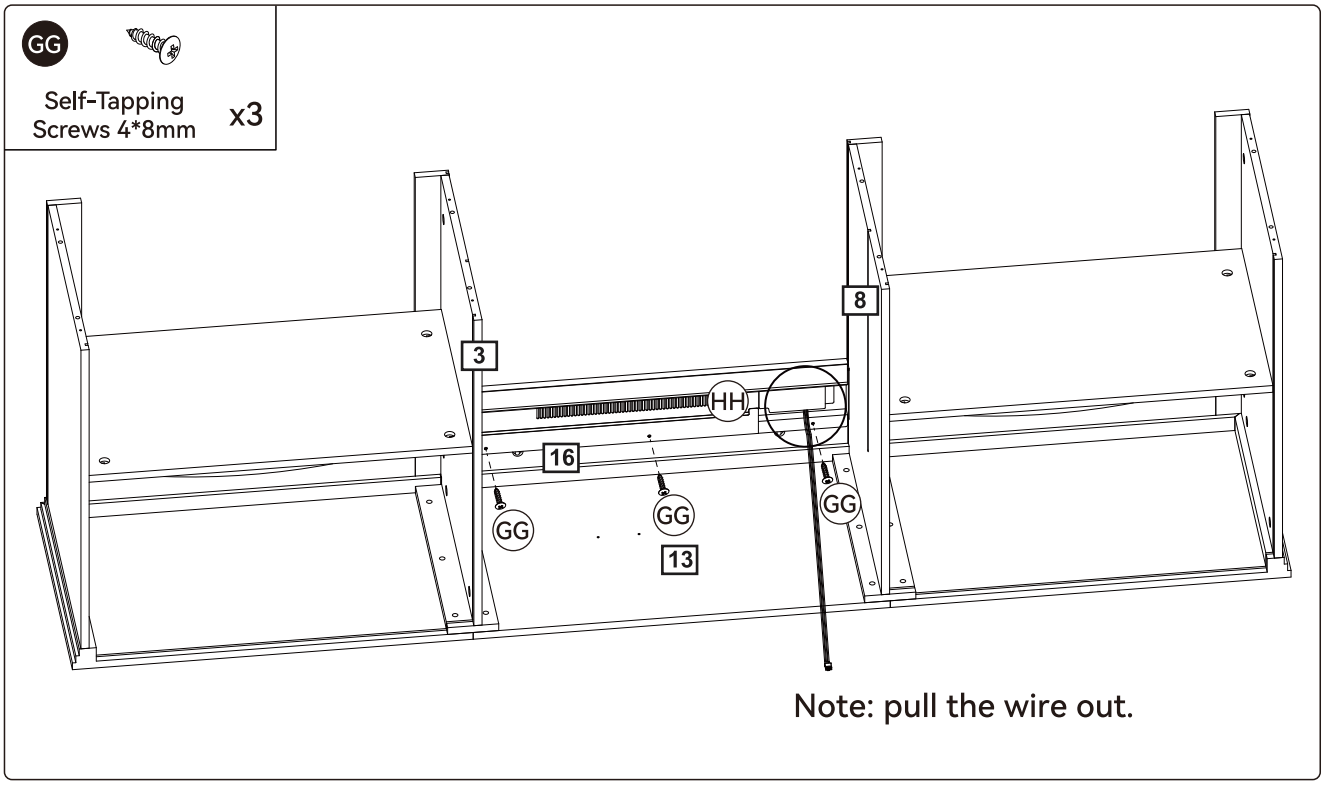

Secure HH to panel (16), using screw GG.

Step 24

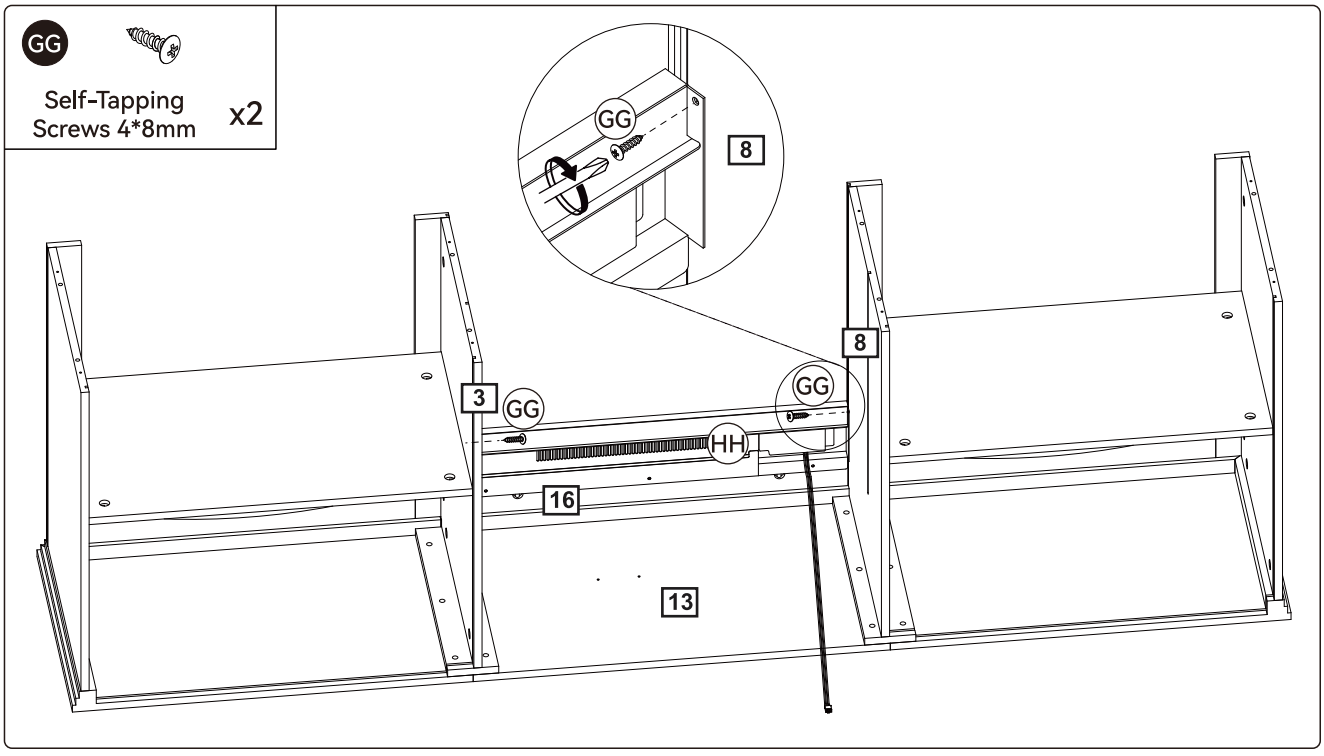

Secure HH to panel (3, 8), using screw GG.

Email : **service@grandtunnel.com**

Step 25

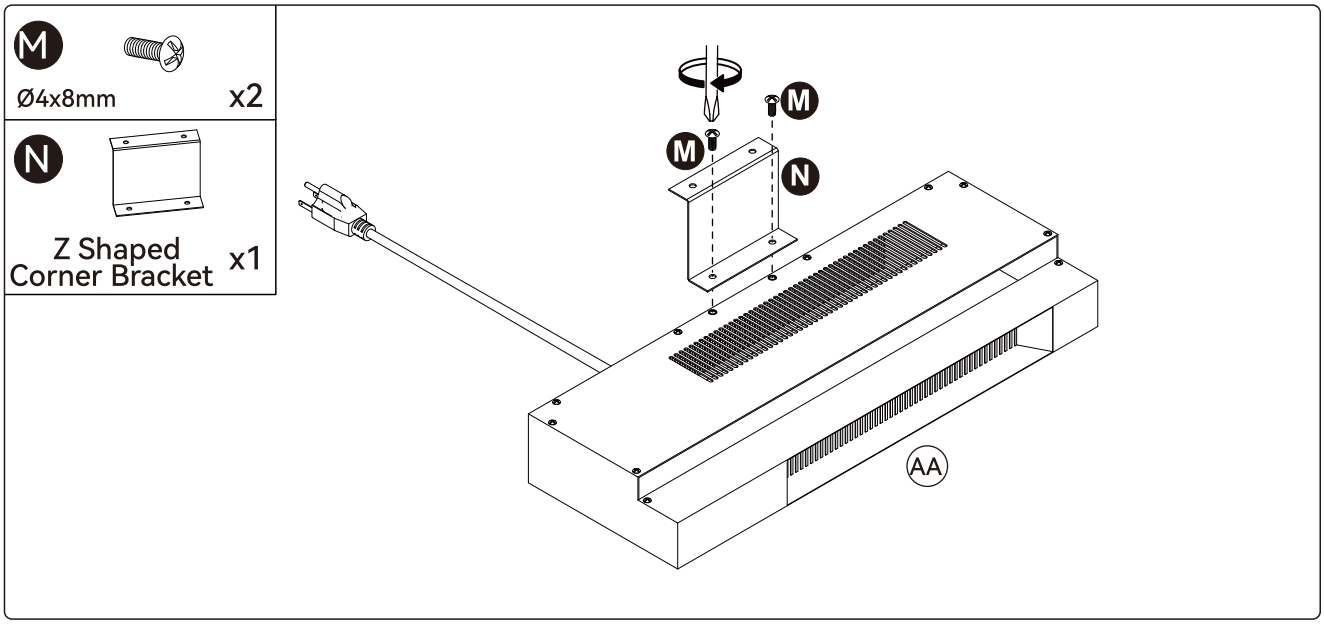

Install N onto heater (AA) and secure it with M through N.

Step 26

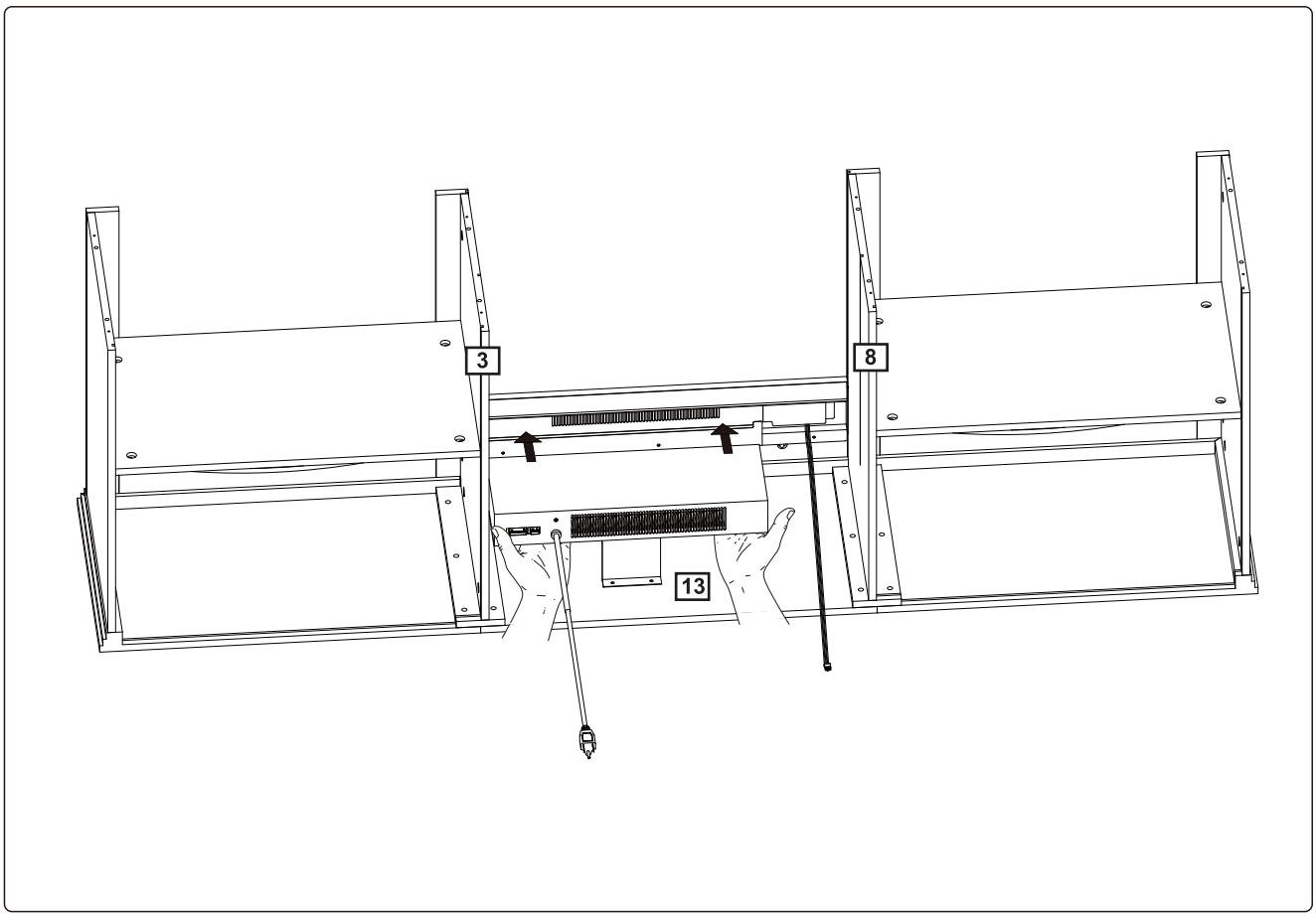

From the back of the cabinet, insert heater (AA) into the panel slot.

Step 27

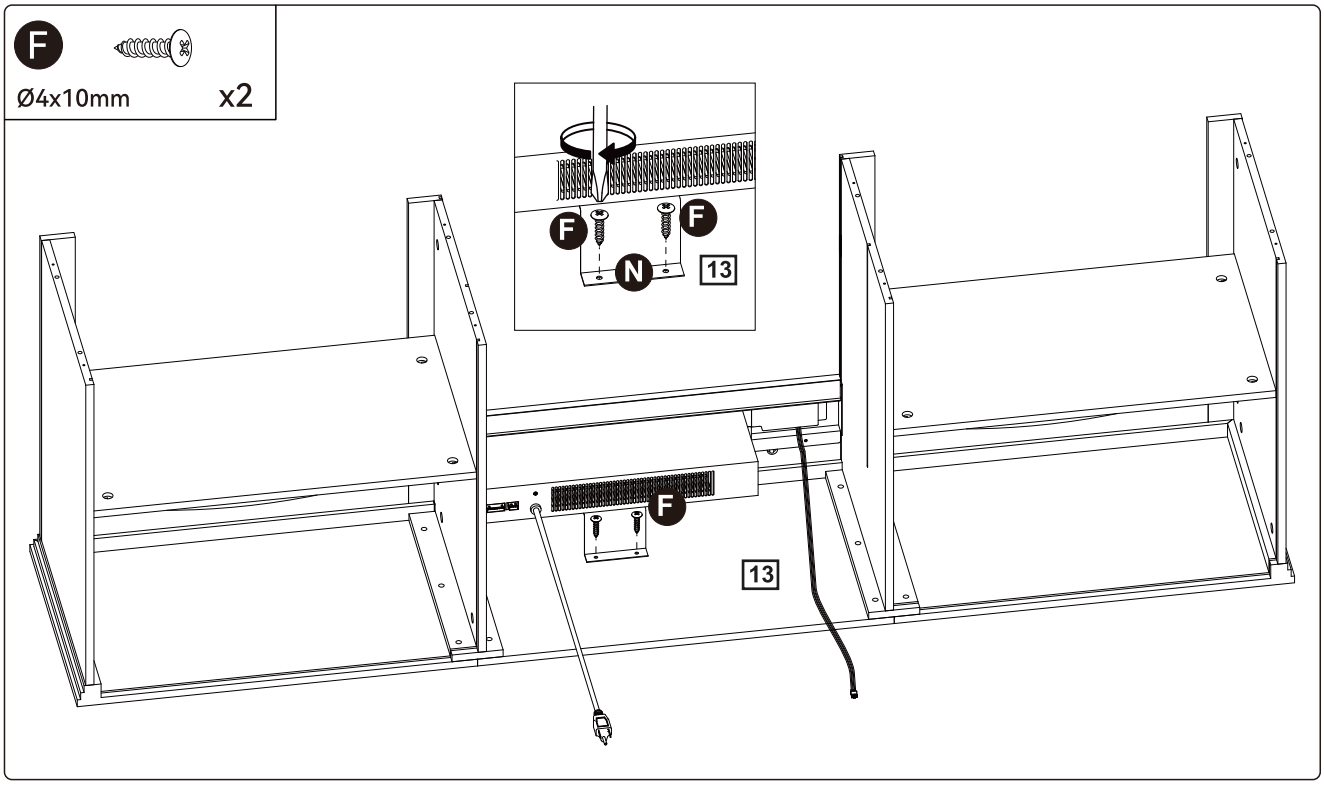

Install Brack (N) onto top panel (13) and securing it with screw F.

Step 28

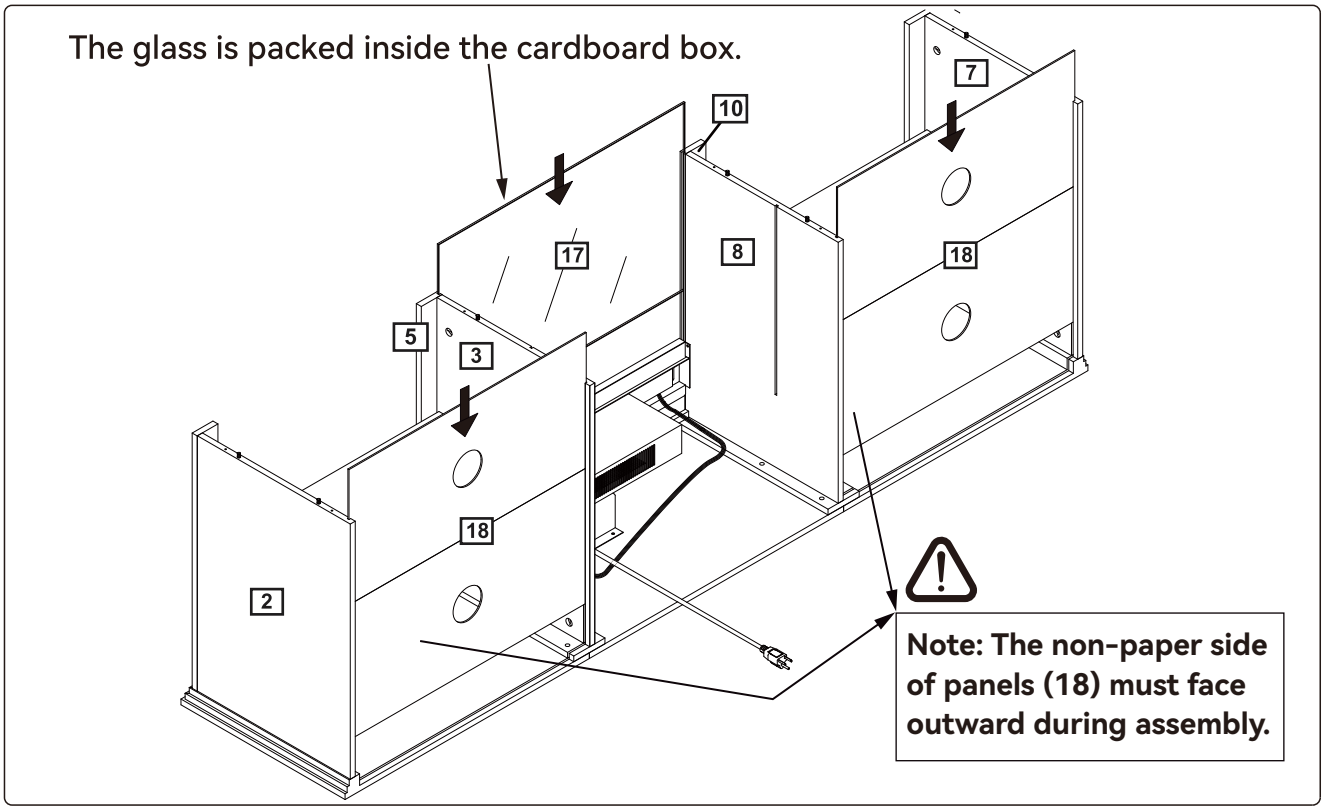

Insert glass panel (17) into the groove of panels (5, 10).
Insert panels (18) into the grooves of panels (2, 3, 7, 8).

Email : **service@grandtunnel.com**

Step 29

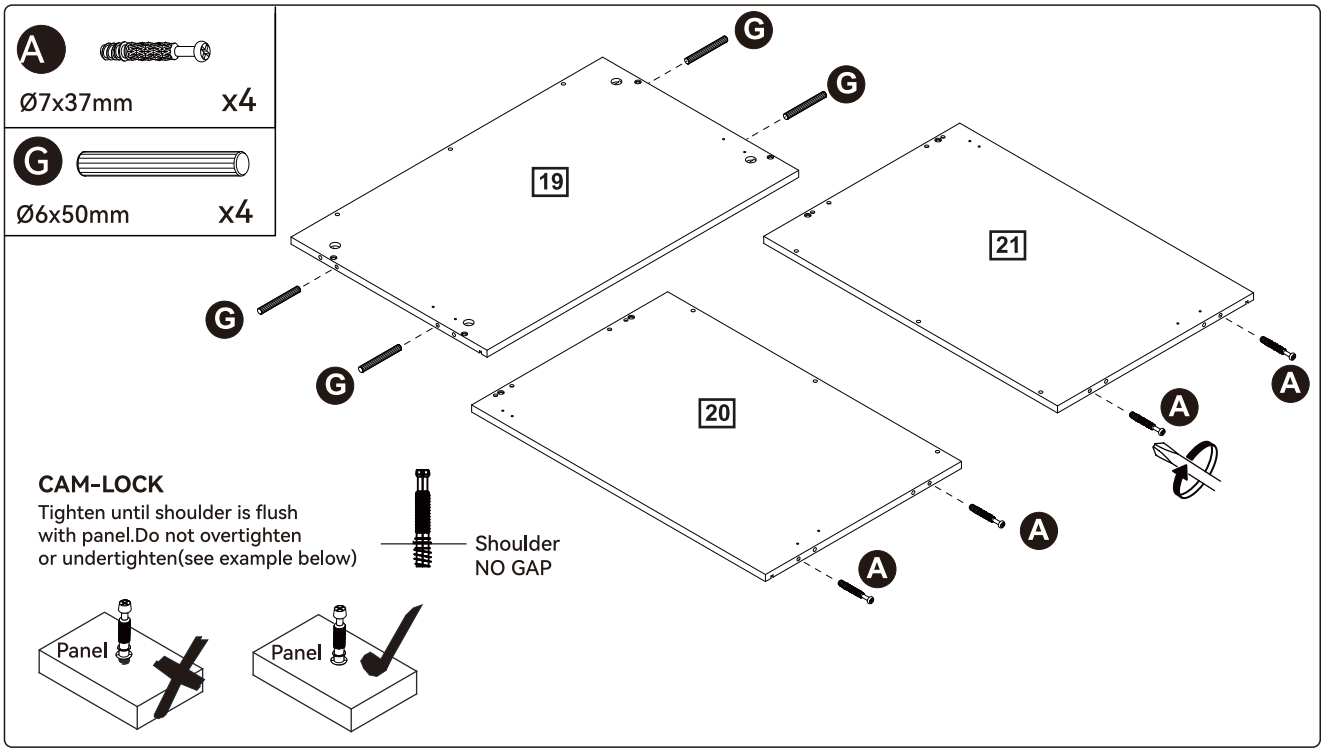

Insert A into panels (20, 21).
Insert G into panel (19).

Step 30

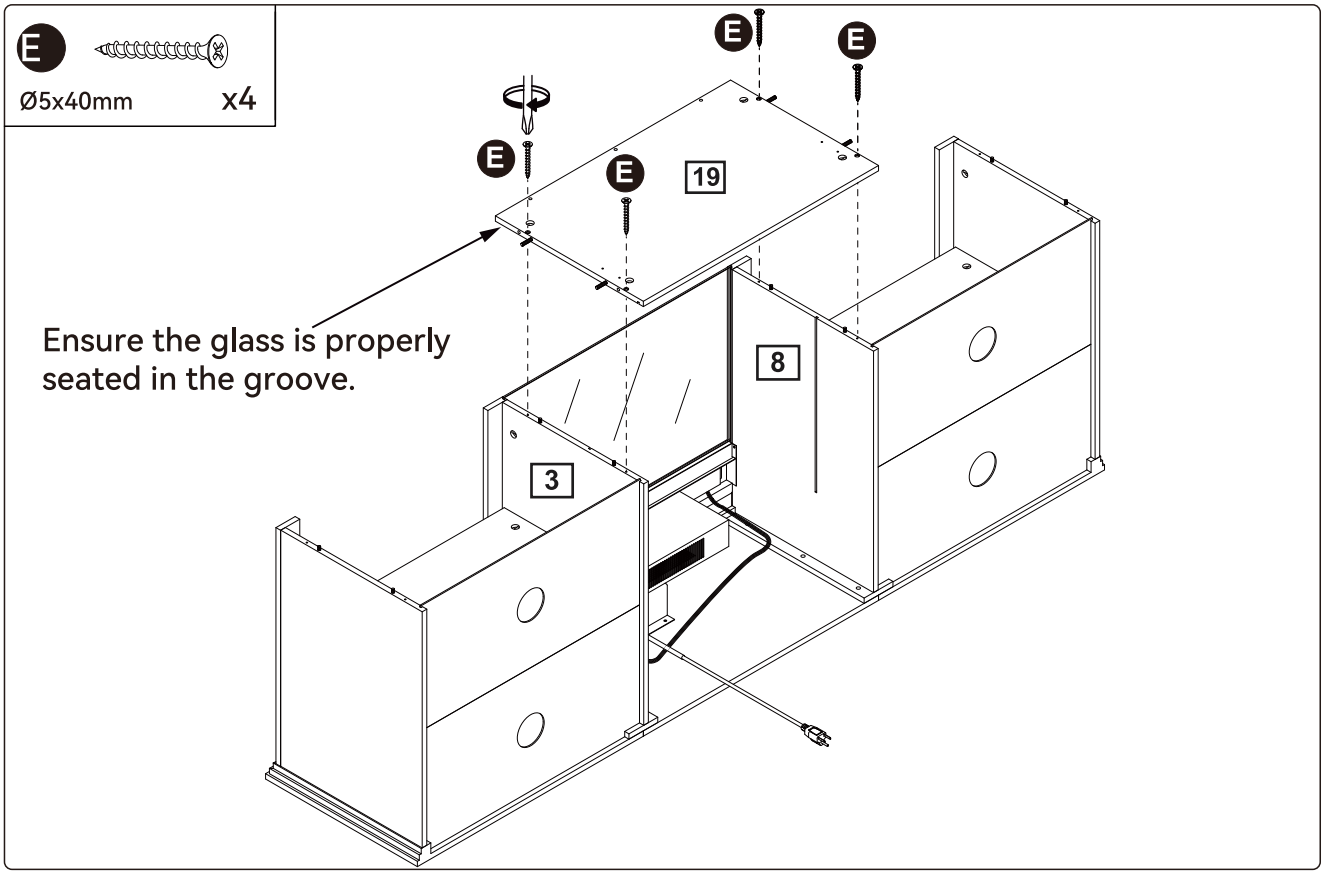

Install panel (19) onto panel (3, 8) using screw E with a screwdriver.

Step 31

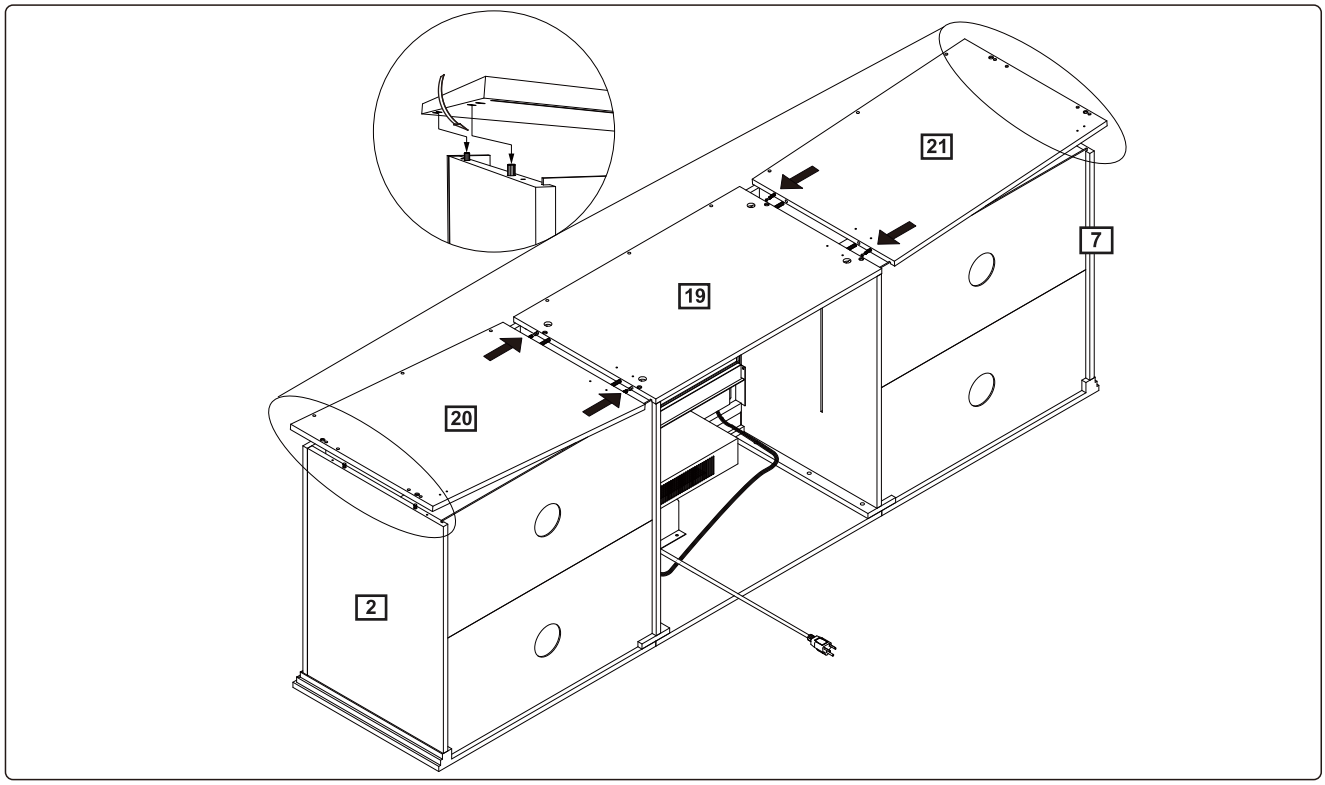

Install panels (20, 21) onto panels (2, 7).

Step 32

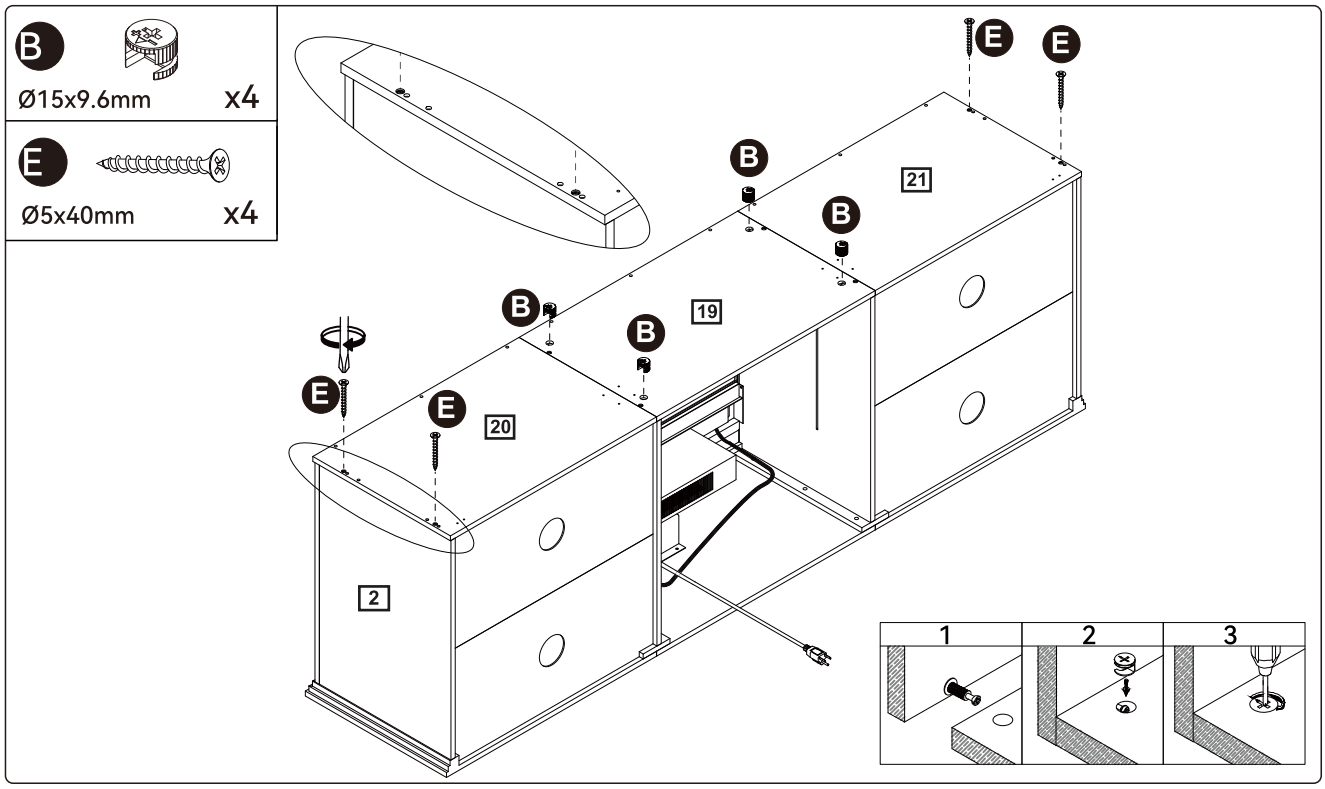

Insert B into panel (19) and secure it.
Pass screw E through panels (20, 21) and secure it.

Email : **service@grandtunnel.com**

Step 33

A

Ø7x37mm x10

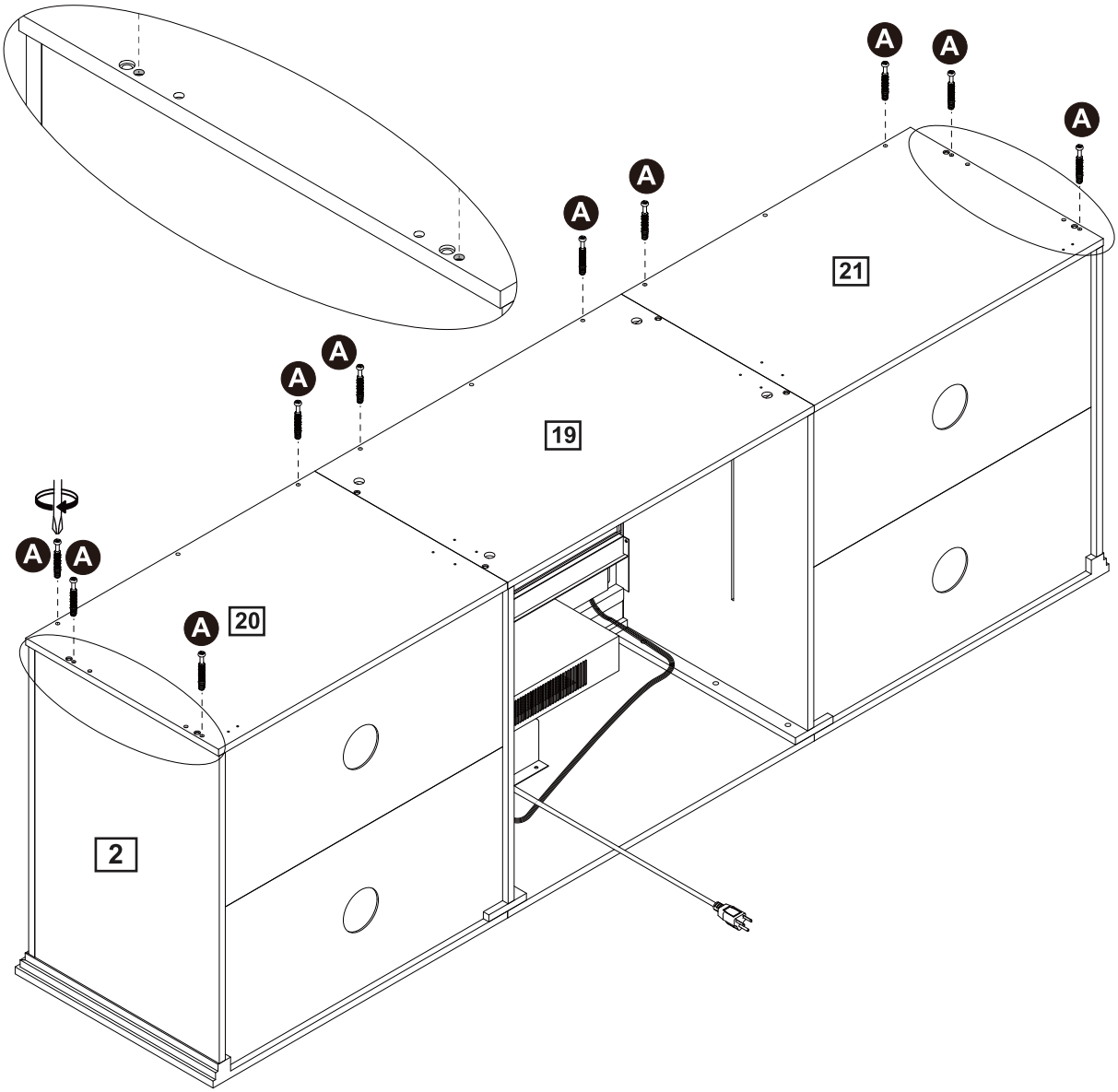

CAM-LOCK
Tighten until shoulder is flush with panel.Do not overtighten or undertighten(see example below)



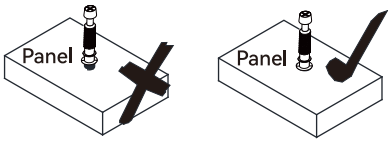

Insert A into panels (19, 20, 21).

Step 34

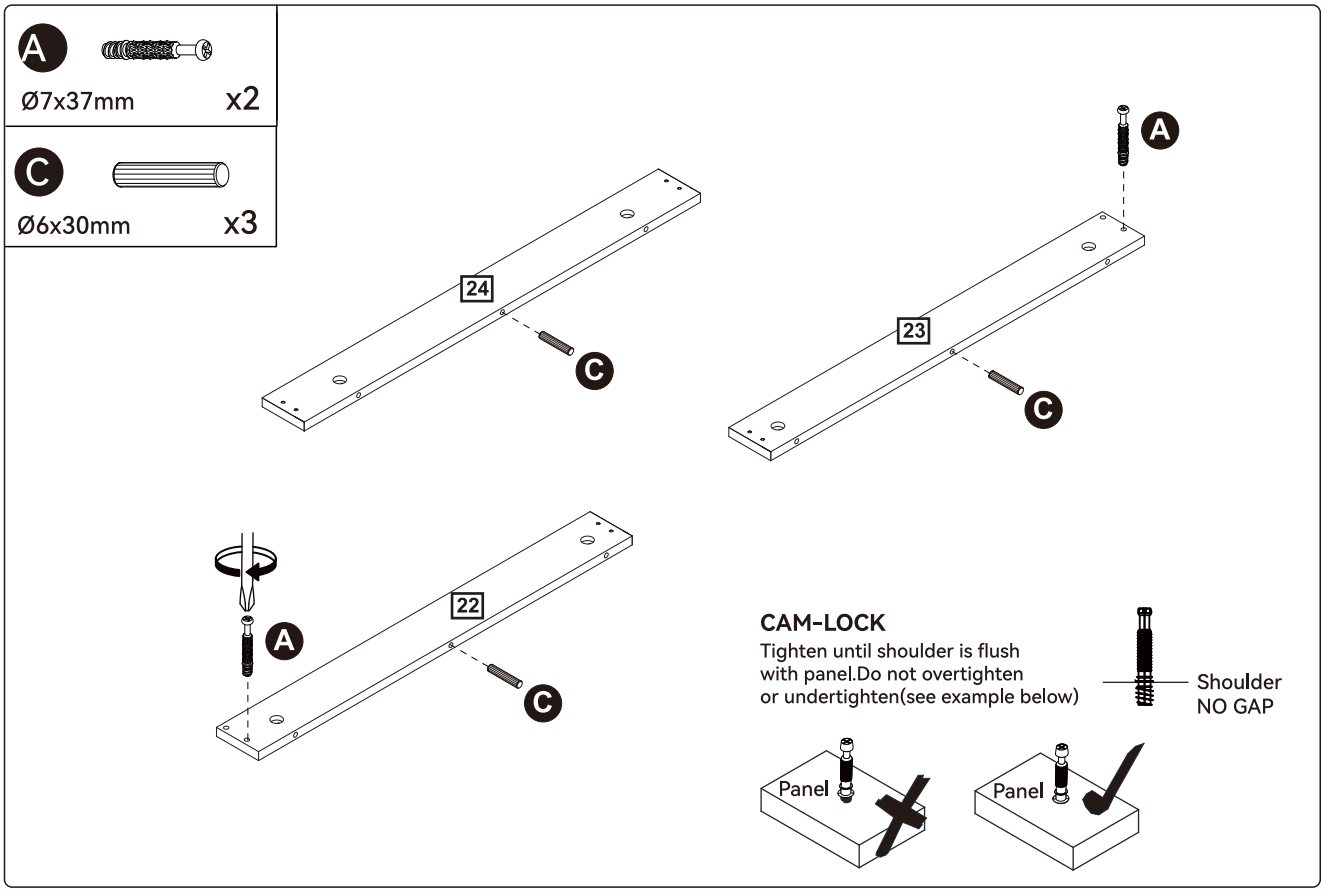

Insert A into panels (22, 23).
Insert C into panels (22, 23, 24).

Step 35

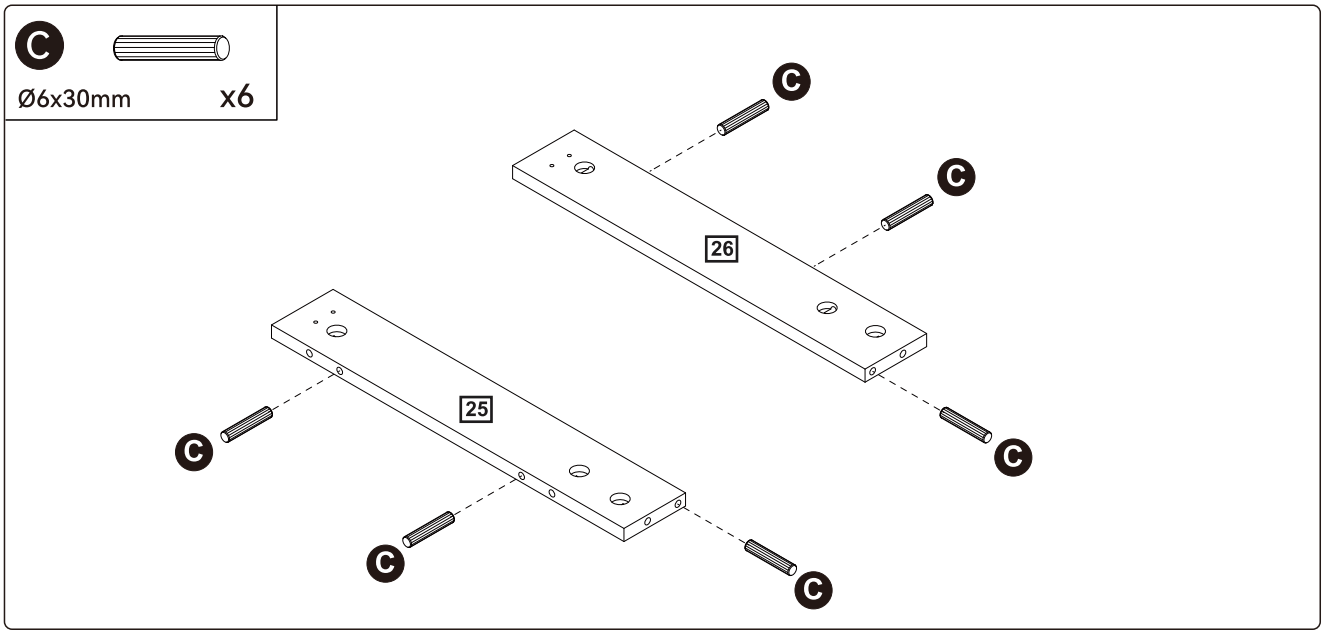

Insert C into panels (25, 26).

Email : **service@grandtunnel.com**

Step 36

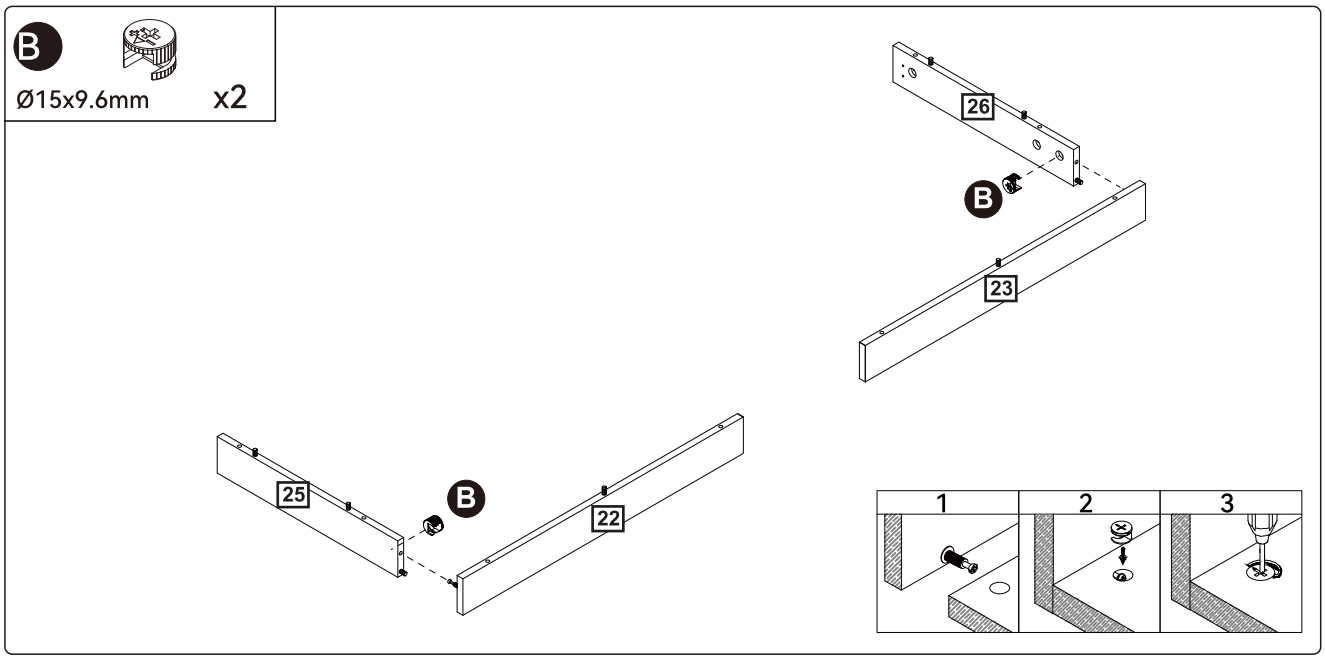

Install panels (25, 26) onto panel (22, 23).
Insert B into panel (25, 26) and secure it.

Step 37

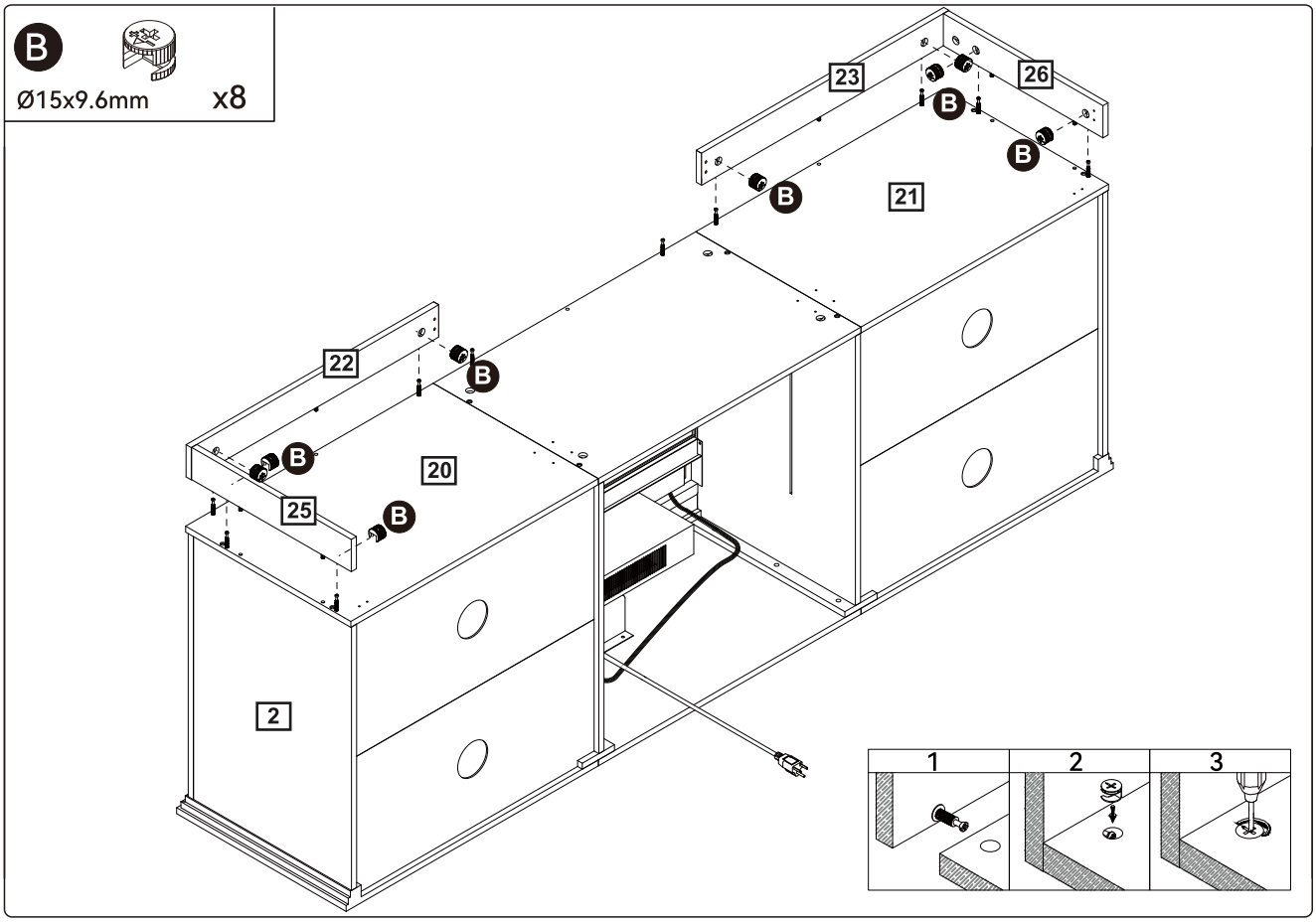

Install panels (22, 23, 25, 26) onto panels (20, 21).
Insert B into panels (22, 23, 25, 26) and secure it.

EN

Step 38

B



Ø15x9.6mm x2

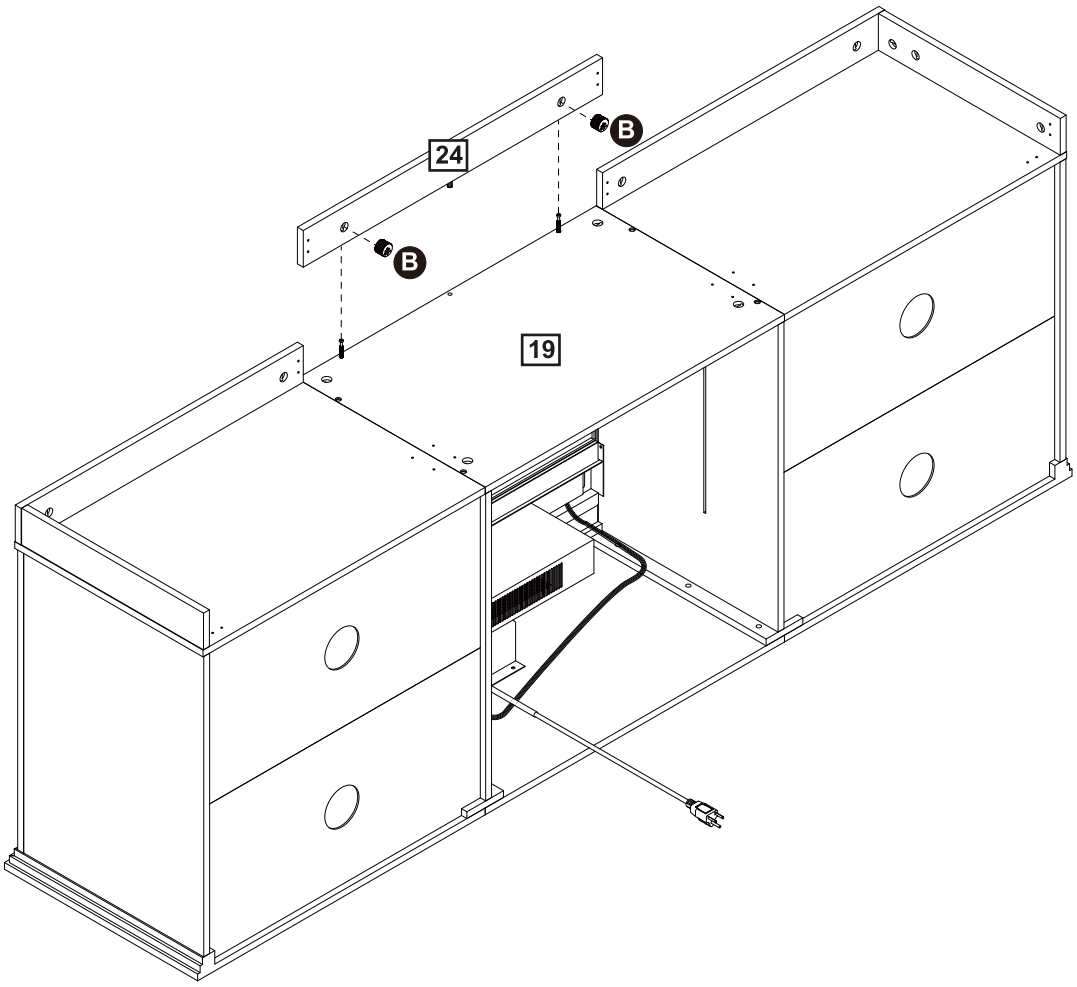

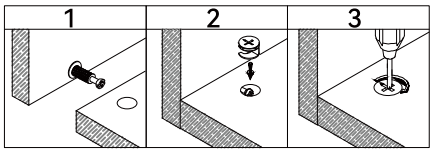

Install panel (24) onto panel (19). Insert B into panel (24) and secure it.

Email : **service@grandtunnel.com**

Step 39

D  Ø3.5x12mm	x8
P 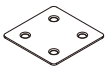 Metal Connector Plate	x2

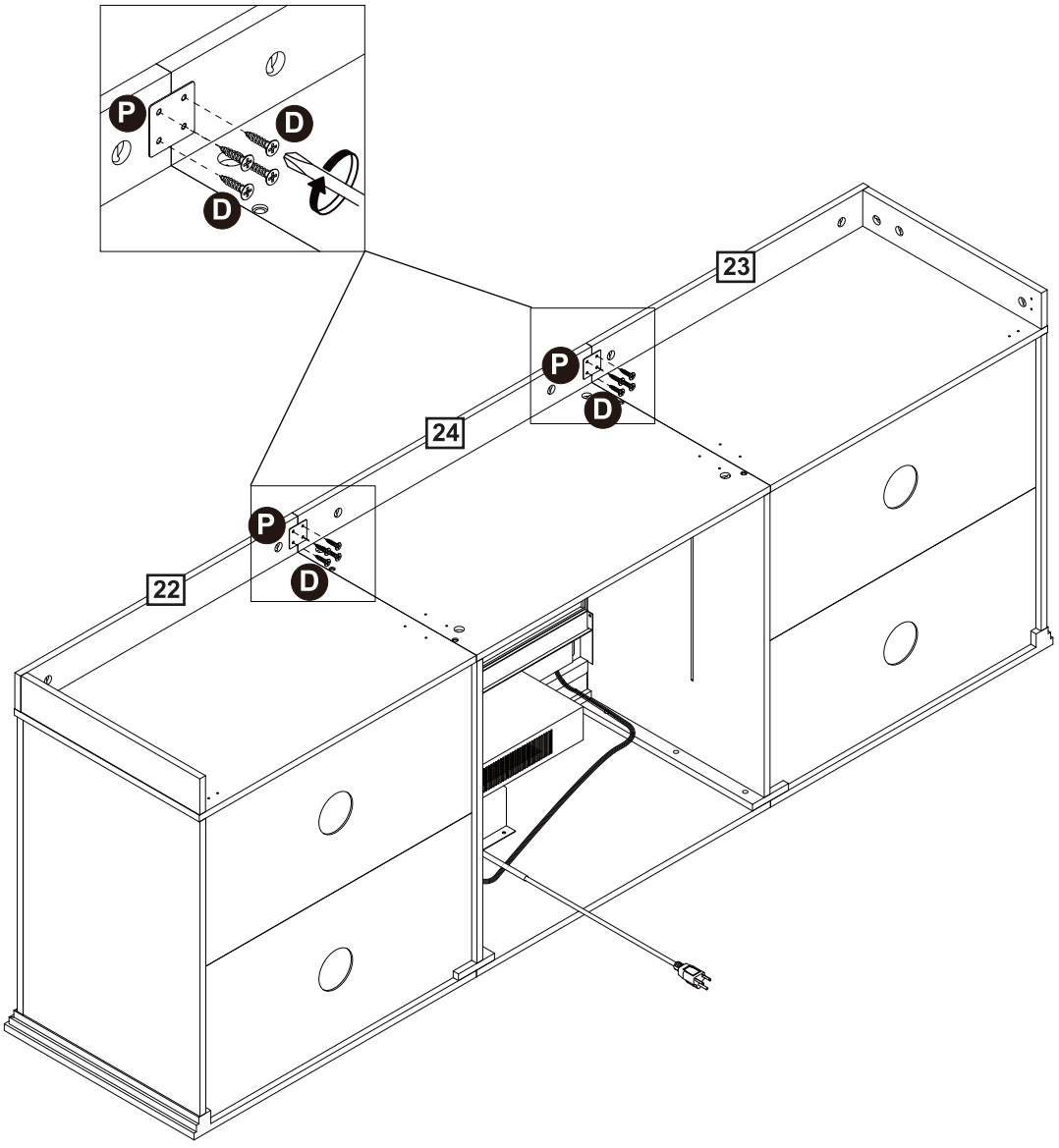

Fasten panels (22, 23, 24) with metal connector plate (P) and (D) screws.

Step 40

D Ø3.5x12mm x8

J L shape bracket x2

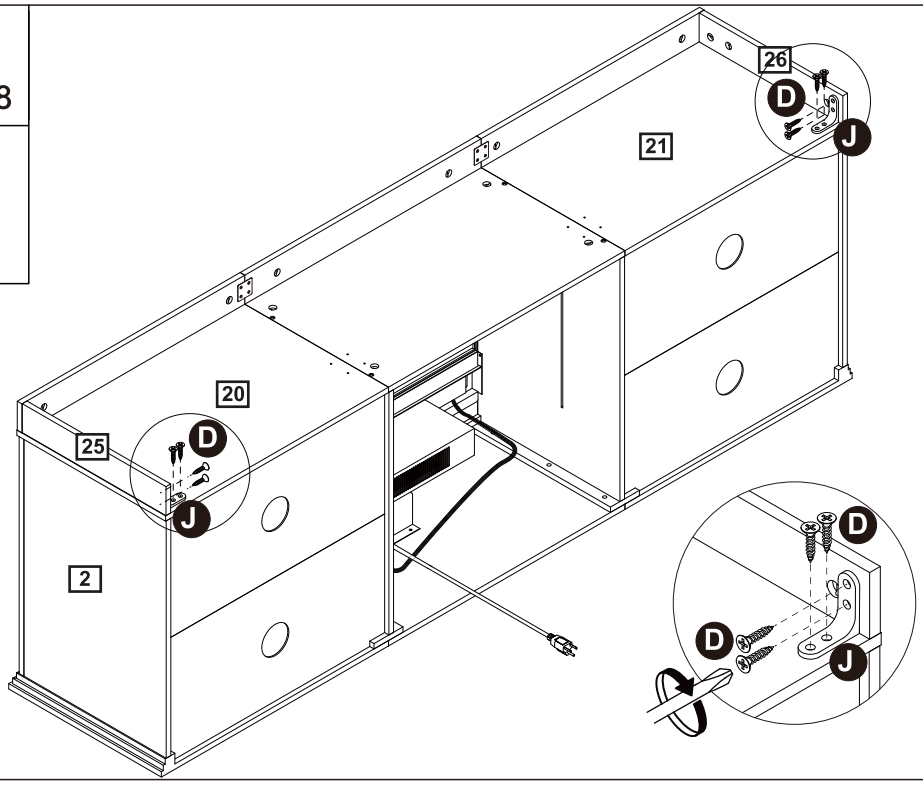

Install J onto panels (20, 21) and secure it with screw D passing through J.

Step 41

F Ø4x10mm x8

K Adjustable Foot (Hx65mm) x2

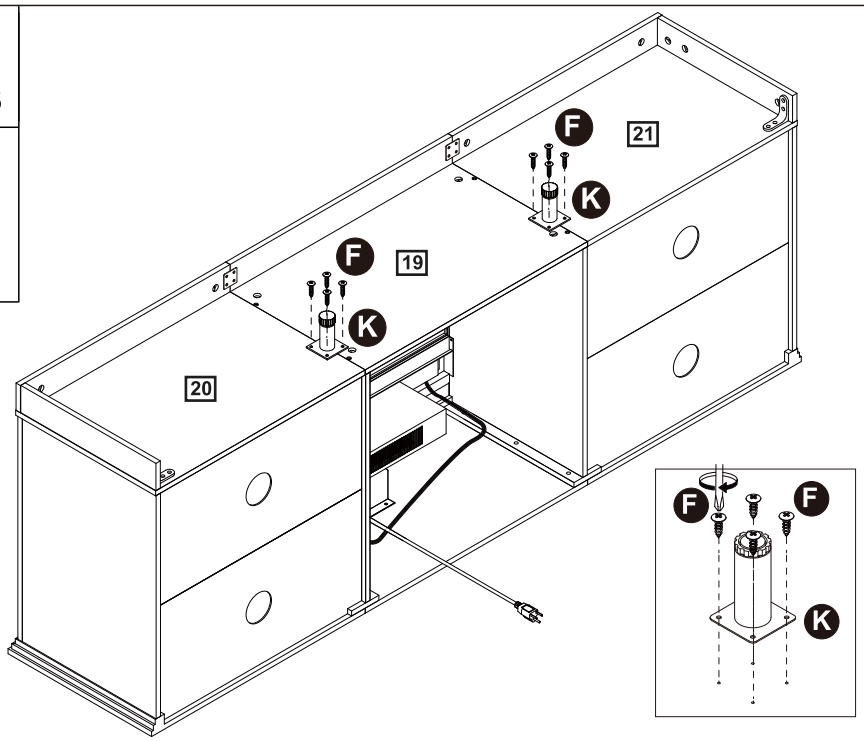

Install K onto panels (19, 20, 21) and secure it with screw F passing through K.

Email : **service@grandtunnel.com**

Step 42

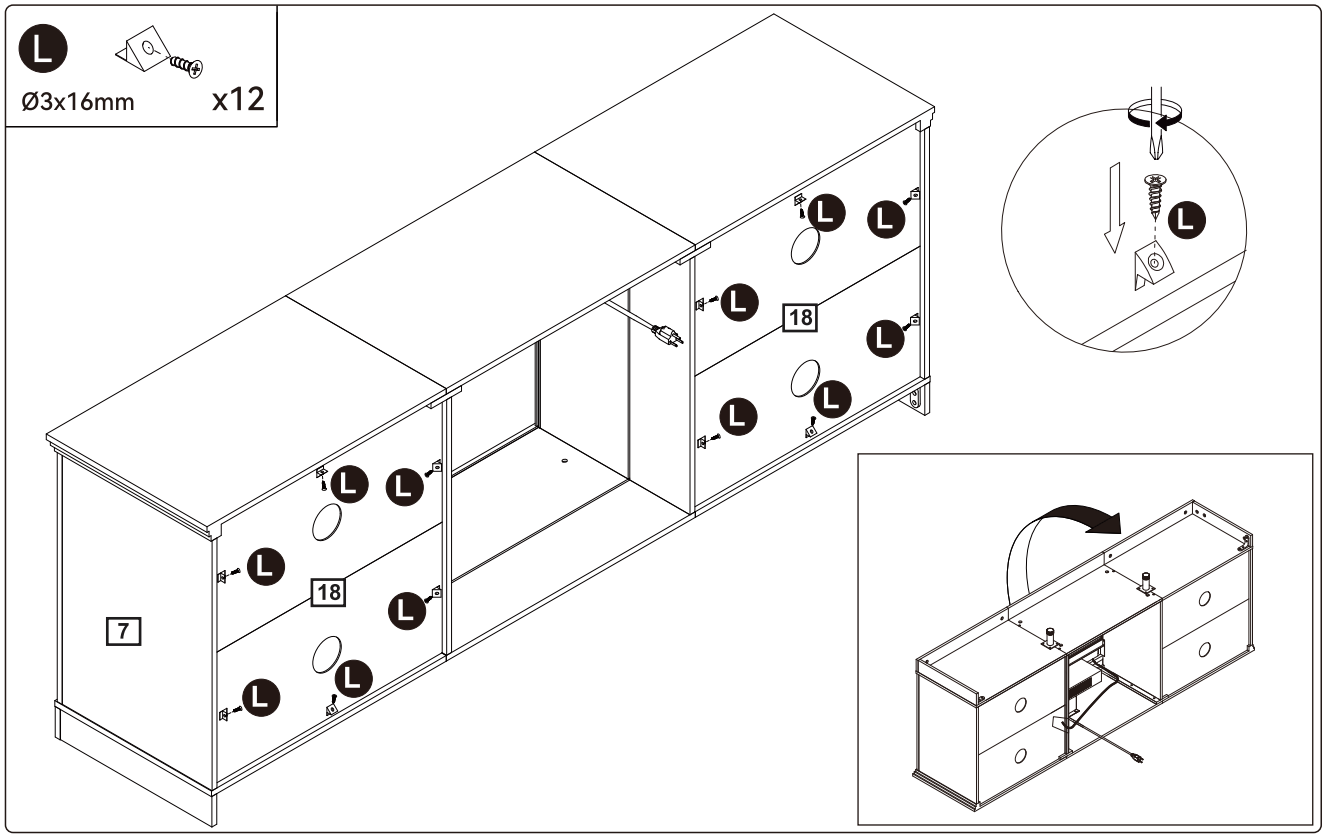

Using a screwdriver, secure back panels (18) with wedges and L.

Step 43

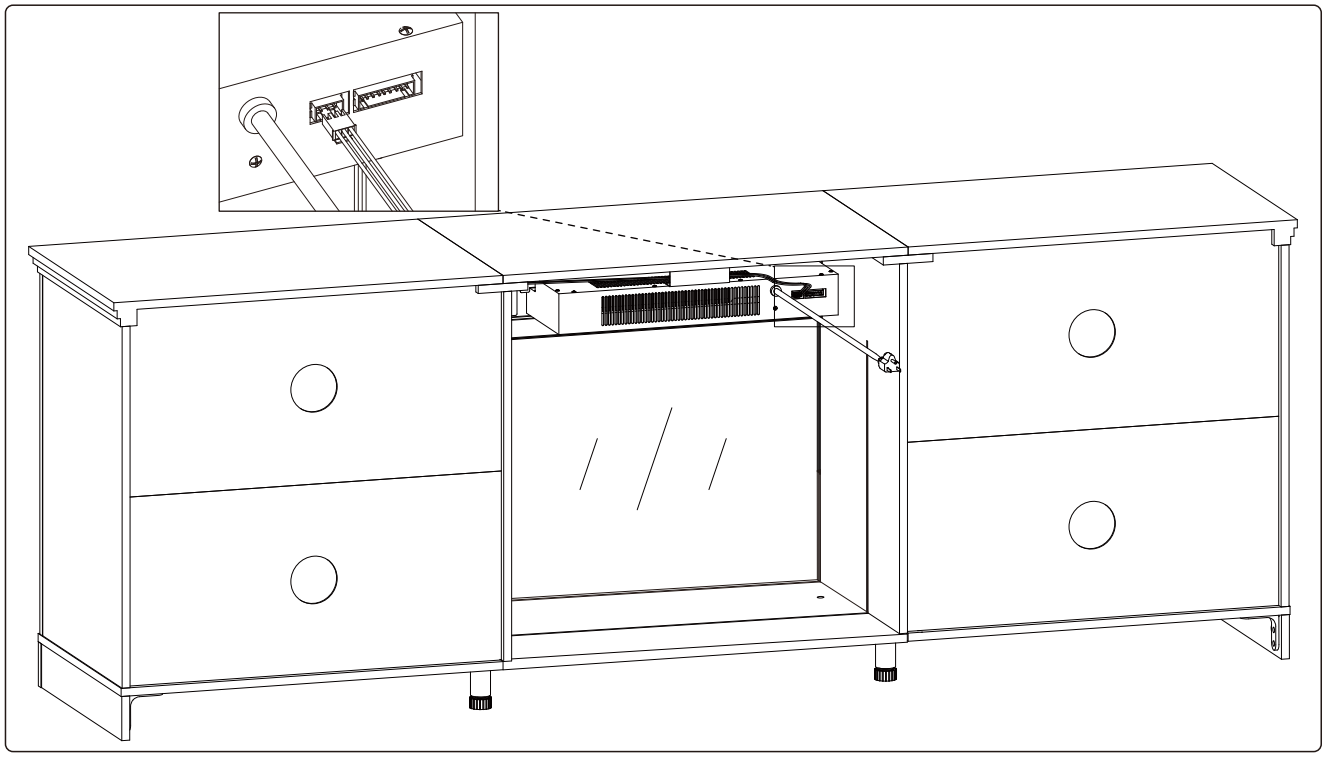

Connect the panel wiring to the corresponding port on heater (AA).

Step 44

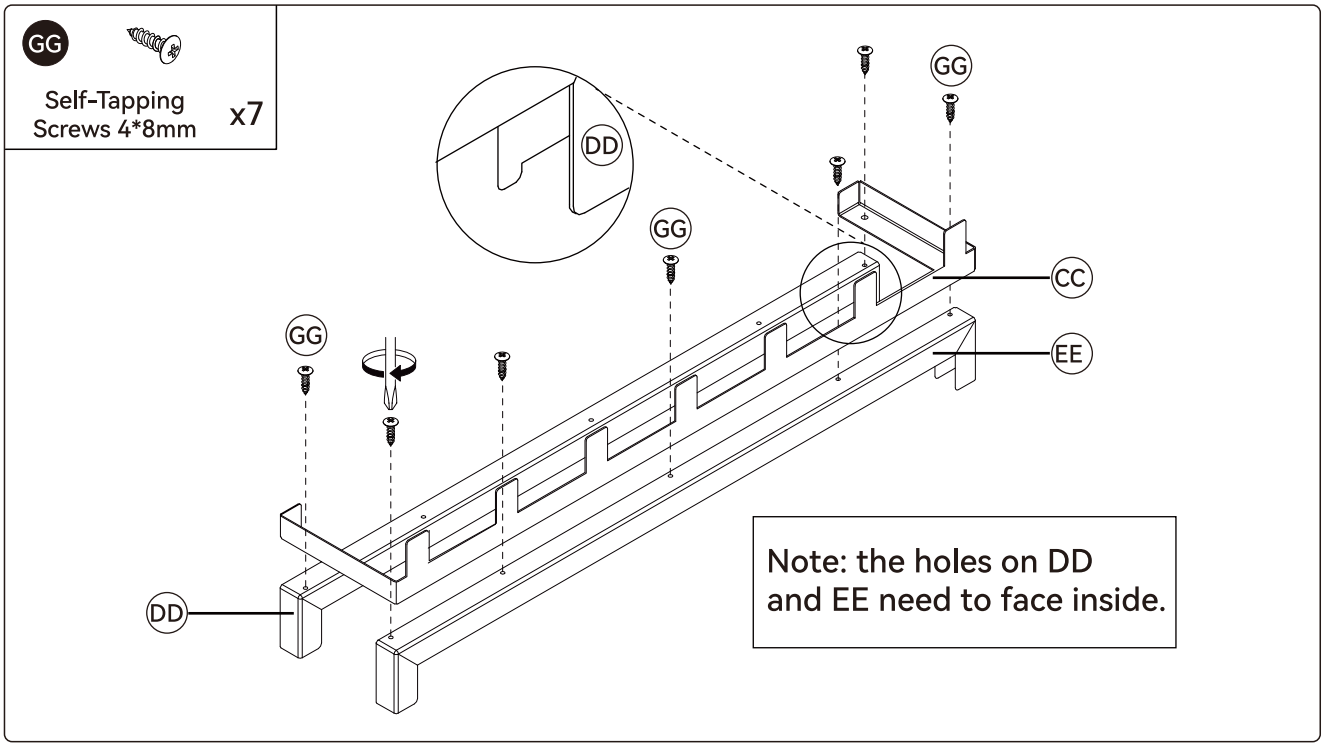

Secure support plate (CC) to front support legs (EE) and rear support legs (DD) with GG.

Step 45

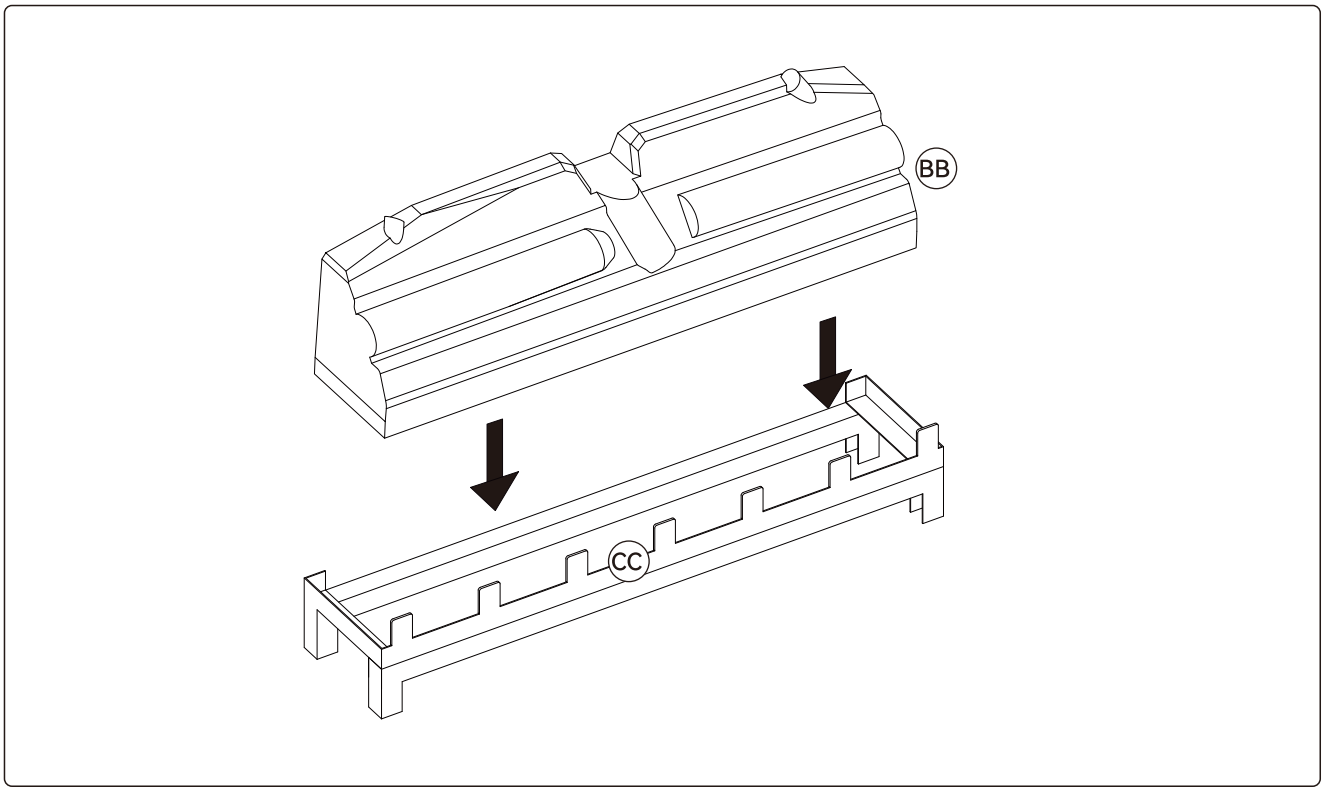

Place the faux logs on the support plate.

Email : **service@grandtunnel.com**

Step 46

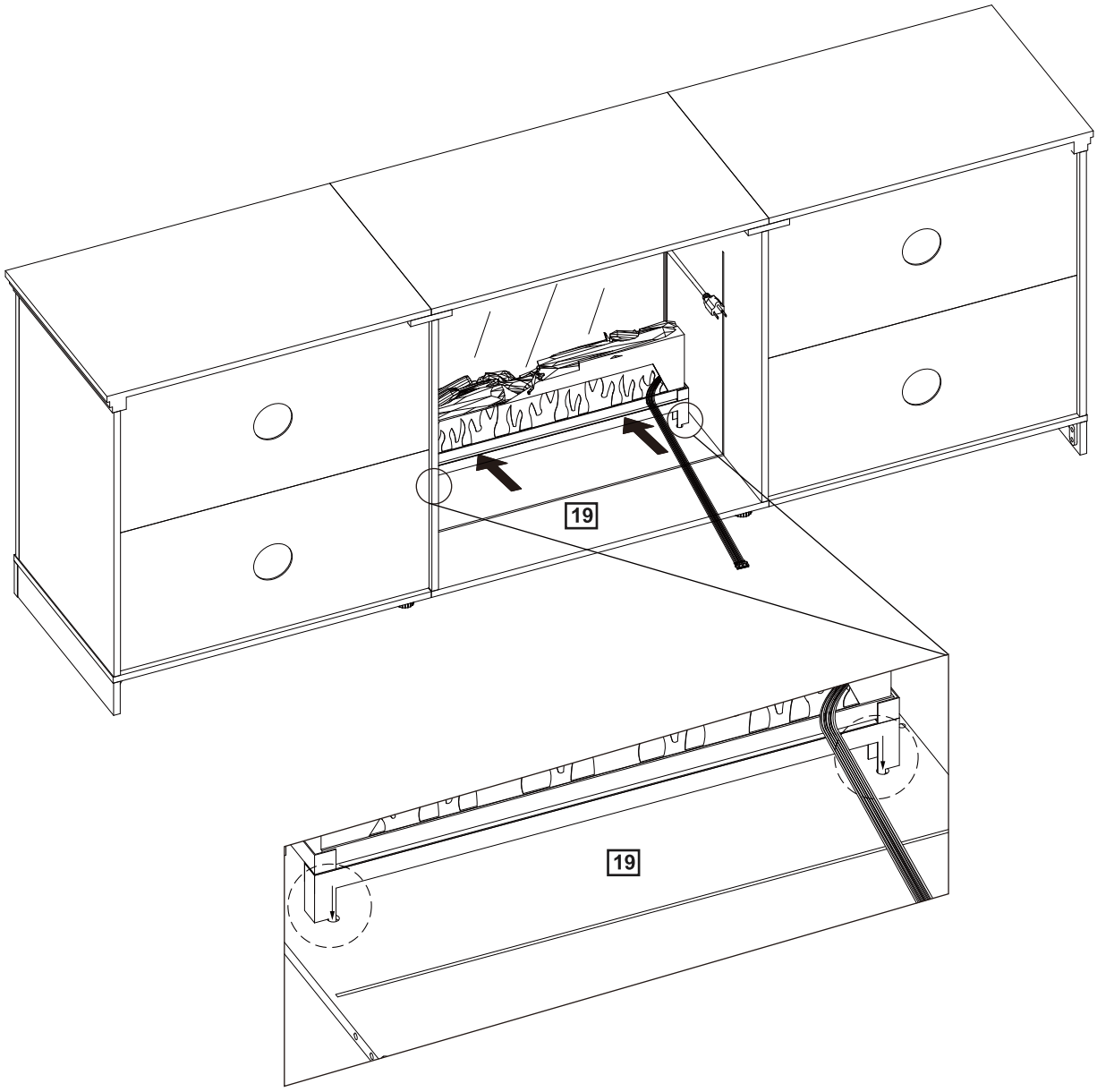

Place the assembled faux log module behind the glass so it rests against the glass.
Note: Insert the feet of the faux log module into the holes.

Step 47

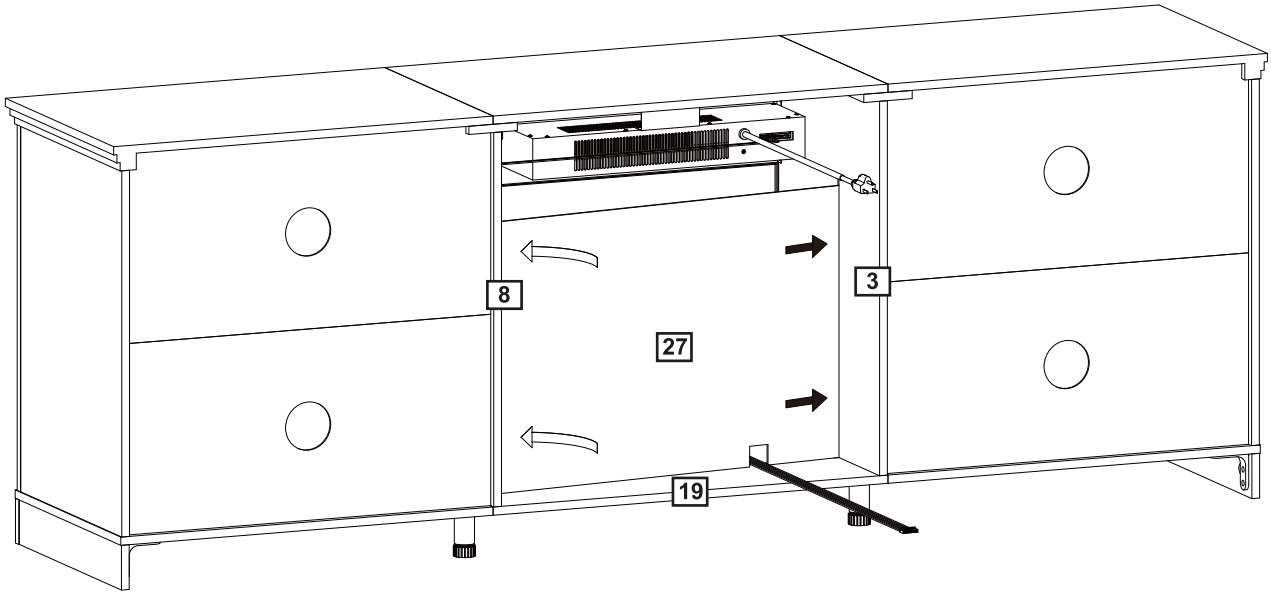

Insert panel (27) into the groove of panel (3) firstly, and then insert it into the groove of panel (8).

Email : **service@grandtunnel.com**

Step 48

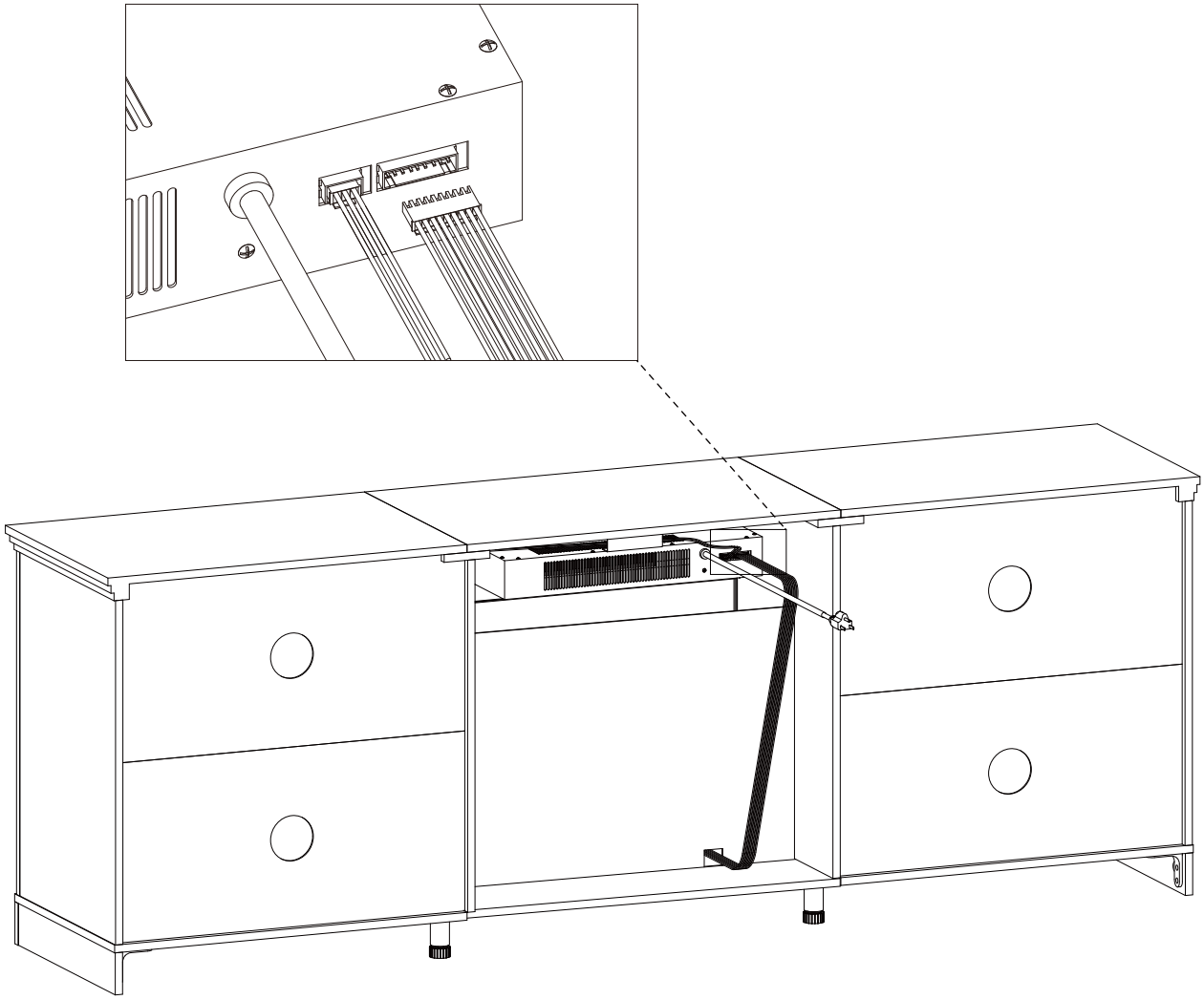

Connect the faux log wiring to the corresponding port on heater (AA).

Step 49

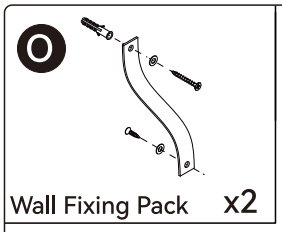

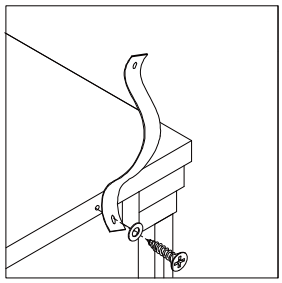

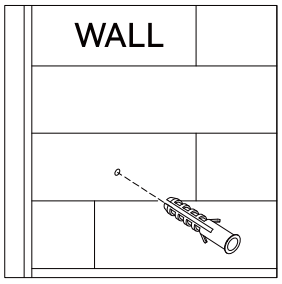

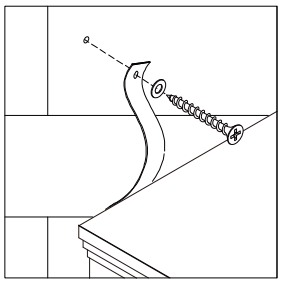

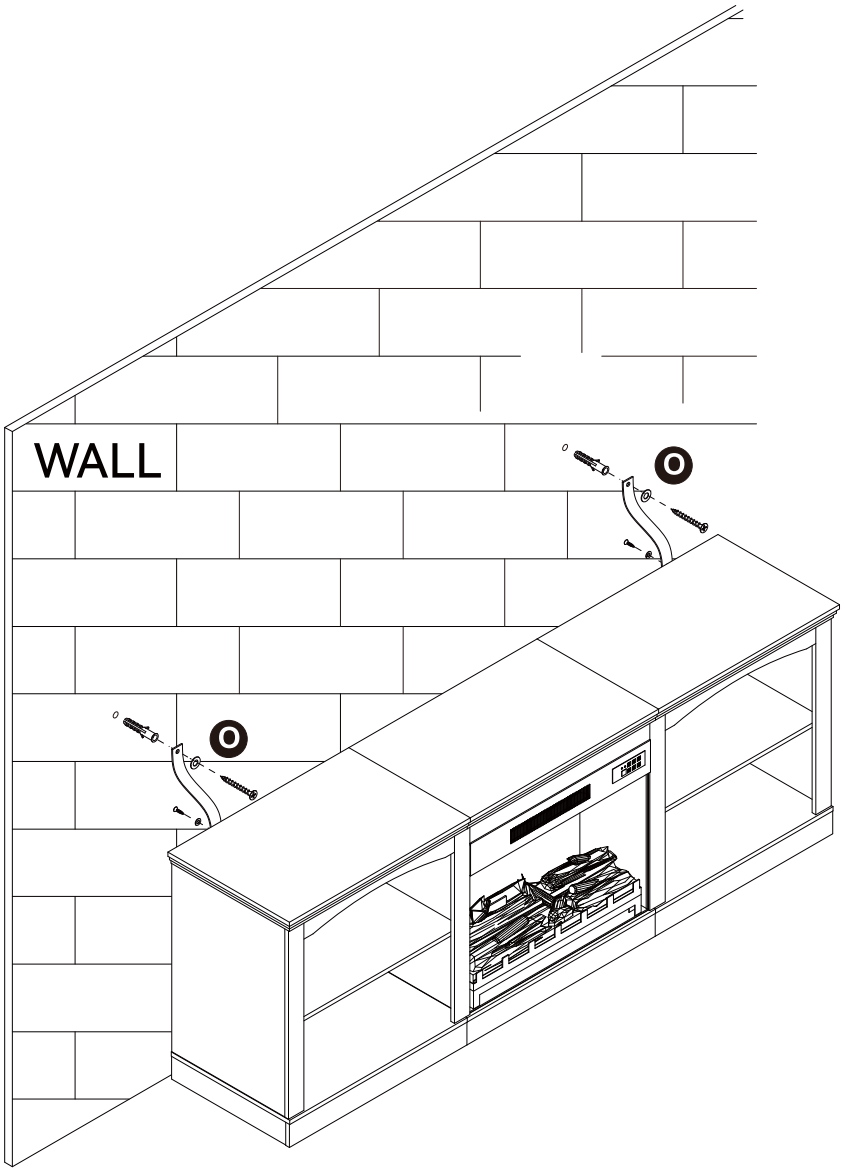

Attach the unit to the wall with wall fixing pack (O), as shown.

Email : **service@grandtunnel.com**

EN

User Manual Electric Fireplace Model SDF-23A10K

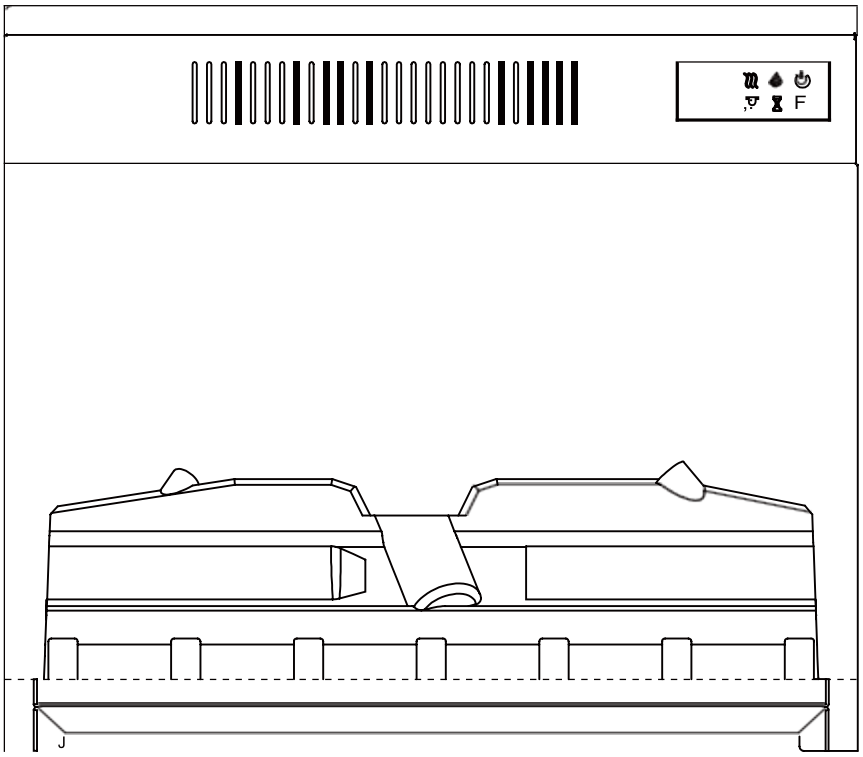

This manual contains important safety information.
Please read it carefully and keep it for future reference.

Safety Information

Important Safety Information

Please read all information in this operation manual, including all safety, operating, and maintenance instructions. To reduce the risk of fire, electric shock, or personal injury, follow all instructions and warnings provided in this manual.

- Read all instructions before using this heater.
- Do not use this heater outdoors.
- This heater is not intended for use in bathrooms, laundry areas, or similar indoor locations. Do not place the heater where it may fall into a bathtub or any other container filled with water.
- Do not run the power cord under carpeting. Do not cover the power cord with throw rugs, runners, or similar coverings.
- Keep the power cord away from traffic areas and places where it may pose a tripping hazard.
- To disconnect the heater, turn the controls off first, then unplug the power cord from the outlet.
- Connect the heater only to a properly grounded outlet. Always plug the heater directly into a wall outlet. Do not use an extension cord or relocatable power tap (power strip).
- To prevent a possible fire, do not block the air intake or exhaust openings of the firebox in any manner. Do not operate the fireplace on soft surfaces, such as a bed, where the openings may become blocked.
- This heater contains a thermal limiter. If the unit overheats or experiences abnormal heating, the thermal safety device will shut off power to prevent damage to the fireplace and reduce the risk of fire.
- Use this heater only as described in this manual. Any use not recommended by the manufacturer may result in fire, electric shock, or personal injury.

Email : **service@grandtunnel.com**

Save These Instructions

⚠ WARNING	There are no user-serviceable parts inside the fireplace/heater. If the unit appears to be malfunctioning, turn it off immediately, unplug it from the wall outlet, and contact customer service.
⚠ WARNING	The heater becomes hot during operation. To avoid burns, do not let bare skin come into contact with hot surfaces. Always use the handle when moving the heater. Keep combustible materials—such as furniture, pillows, bedding, papers, clothing, and curtains—at least 3 feet (0.9 m) away from the front of the heater, and keep them away from the sides and rear as well.
⚠ WARNING	Extreme caution is required whenever the heater is used by or near children, individuals with reduced mobility, or whenever the heater is operating and left unattended.
⚠ WARNING	Always unplug the heater when it is not in use.
⚠ WARNING	Do not operate the heater if the power cord or plug is damaged, or if the heater has malfunctioned, been dropped, or otherwise damaged.Have the heater inspected, adjusted, or repaired by an authorized service facility.
⚠ WARNING	Do not insert or allow any foreign objects to enter the ventilation or exhaust openings, as this may cause electric shock, fire, or damage to the heater.
⚠ WARNING	This heater contains parts that may produce high temperatures, arcs, or sparks. Do not use it in areas where gasoline, paint, or other flammable liquids are used or stored.
⚠ WARNING	The top center area of the fireplace may become hot during heater operation and can cause serious injury or burns. Always supervise young children around the fireplace/heater. Do not place any fabric, decorations, or other items above the heater outlet of the fireplace, and do not block the heater outlet in any way, as this may cause a fire and result in serious injury.

SAFETY INFORMATION
GROUNDING INSTRUCTIONS

DANGER

Improper connection of the equipment-grounding conductor may result in a risk of electric shock. If you are unsure whether the product is properly grounded, consult a qualified electrician or service technician. Do not modify the plug provided with the product. If the plug does not fit the outlet, have a qualified electrician install the proper outlet.

- This product must be grounded. In the event of a malfunction, grounding provides a path of least resistance for electric current to reduce the risk of electric shock. This product is equipped with a power cord containing an equipment-grounding conductor and a grounding plug. The plug must be connected to an appropriate outlet that is properly installed and grounded in accordance with all local codes and ordinances.
- This heater is intended for use on a 120-volt circuit and is equipped with a grounding plug. An adapter for connecting a three-prong grounding plug to a two-slot outlet can be purchased from local electronics retailers or online suppliers. The green grounding tab or wire extending from the adapter must be connected to a permanent ground, such as a properly grounded outlet box.
- **If a properly grounded three-slot outlet is available, the adapter should not be used.**

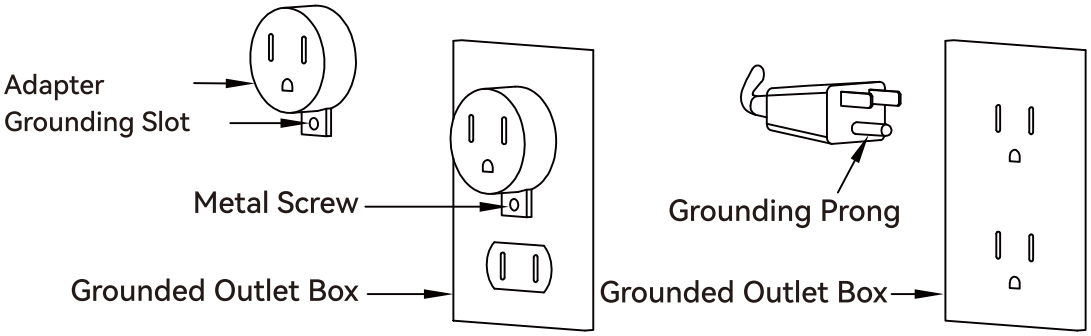

TECHNICAL SPECIFICATION

Power Rating	1400W
Voltage	120V
Frequency	60Hz

Email : **service@grandtunnel.com**

Operation Instructions

Identifying The Control Panel

The control panel is located at the top right corner of the fireplace or heater. The control panel includes the following buttons and indicators: Power On/Off Button (①), Flame Control (②), Heater Control (③), Brightness Adjustment (④), Timer Function (⑤), Temperature Setting (⑥), Display Area (⑦), Indicator Light (⑧)

The Display Area (⑦) shows the heating level, flame level, brightness level, timer settings, and temperature.

The Indicator Light (⑧): The red light stays on when the power is connected, indicating the unit is powered on. The blue light remains on when the unit is operating.

The Temperature Setting (⑥): Press and hold to switch between Celsius and Fahrenheit.

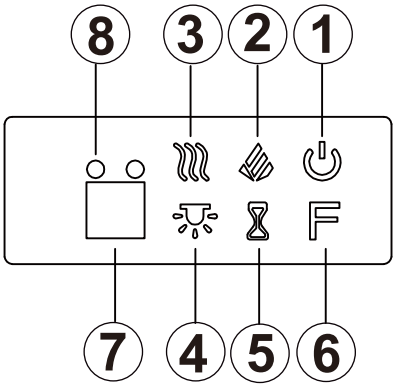

Using the Power On/Off Function

Press the Power On/Off button (①). The indicator light will turn blue, indicating the fireplace is on. Press the button again, and the indicator light will turn red, indicating the fireplace is off.

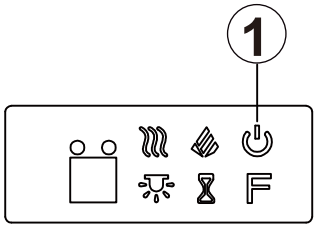

Using the Flame Control Function

Press the Flame Control button (②) to manually adjust the flame color. The available flame color settings are:

Gradient, Mixed Color, Orange, Green, Blue, Orange + Green, Orange + Blue, Green + Blue

Button Press Count	Display Area Values	Flame Color
1	C1	Gradient
2	C2	Mixed Color
3	C3	Orange
4	C4	Green
5	C5	Blue
6	C6	Orange+Green
7	C7	Orange + Blue
8	C8	Green+Blue

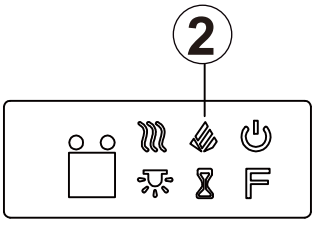

Operation Instructions

Using the Heating Function

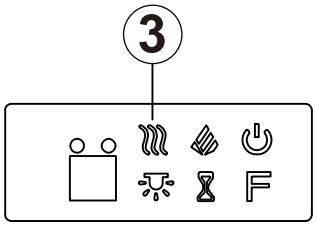

After powering on, the heater will default to its set temperature, which is62°F. The heater will only start operating if the room temperature is below62°F. If the heating function (③) is manually turned on, the heater will no longer recognize the set temperature and will continue to operate until manually turned off.

Using the Brightness Adjustment Function

The brightness adjustment function cannot be used when the flame setting is on C1.

Press the Brightness Adjustment button (④) to adjust the flame brightness. The default flame brightness is set to L5.

Button Press Count	Display Area Values	Flame Brightness
1	L5	100%
2	L4	80%
3	L3	60%
4	L2	40%
5	L1	20%

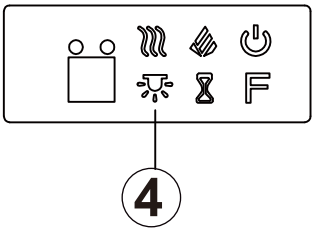

Using the Timer function

Press the Timer button (⑤) to set the fireplace's runtime. The minimum time is 1 hour, and the maximum is 8 hours. Once the set time is reached, both the heater and the flame will stop, and the fireplace will turn off. If the heater is not on, the flame will stop, and the fireplace will turn off once the set time is reached.

Button Press Count	Display Area Values
1	0H
2	1H
3	2H
4	3H
5	4H
6	5H
7	6H
8	7H
9	8H

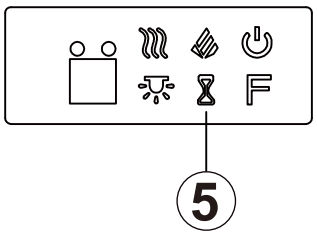

Email : **service@grandtunnel.com**

Using the Temperature Setting Function

Press the Temperature Setting button (⑧) to set the temperature in Fahrenheit. Press and hold the button to switch to Celsius.

Button Press Count	Fahrenheit Temperature	Button Press Count	Fahrenheit Temperature
1	62	1	18
2	64	2	19
3	66	3	20
4	68	4	21
5	70	5	22
6	72	6	23
7	74	7	24
8	76	8	25
9	78	9	26
10	80	10	27
11	82	11	28

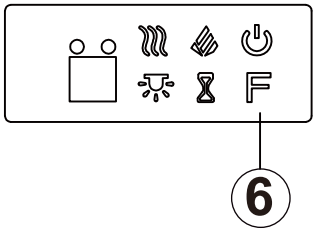

Using the Remote Control

The functions on the remote control are the same as those on the control panel

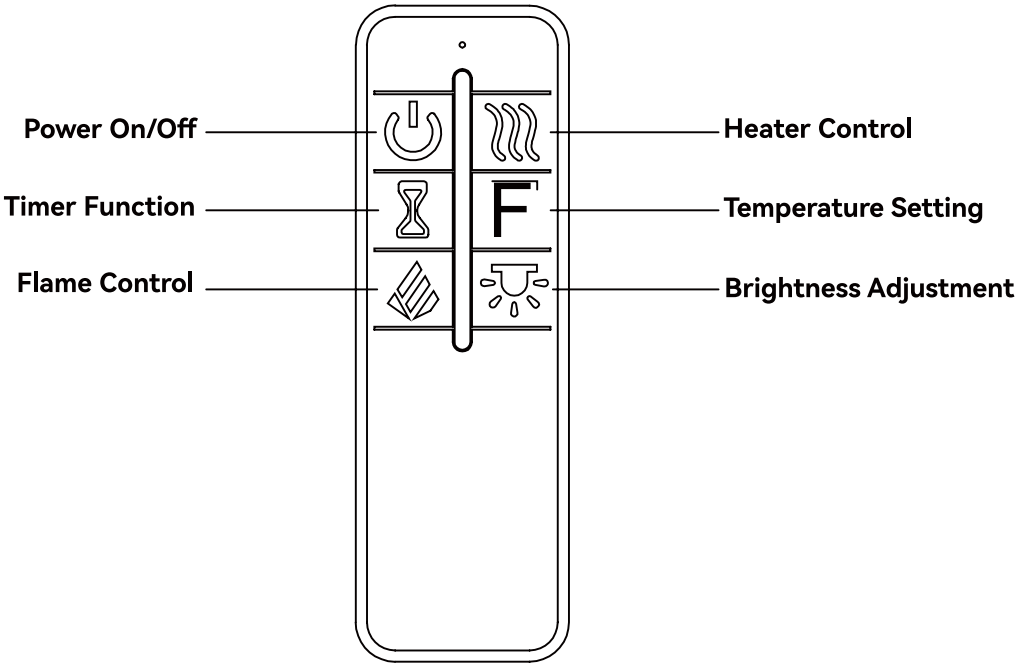

Battery Replacement

The battery compartment is located at the back of the remote control.

1. Press and slide the battery cover to open it.
2. Insert two 1.5V (AAA) batteries, ensuring they are installed correctly with the proper polarity (+ and -) as indicated inside the battery compartment.

Note: If the product is not going to be used for an extended period, remove the batteries.

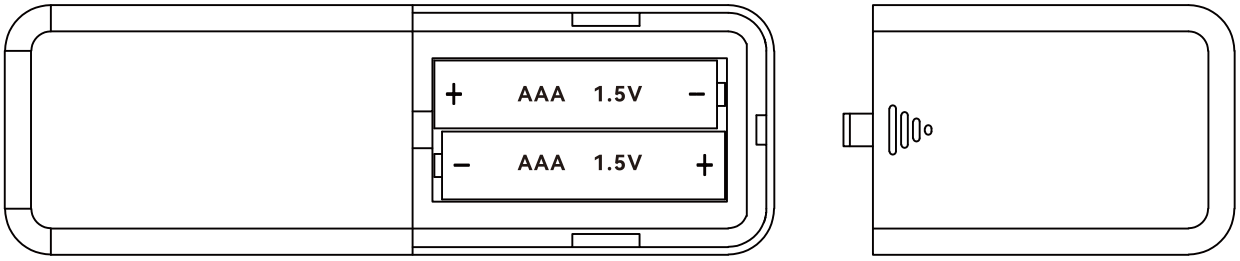

Do not mix new and old batteries.
Do not use rechargeable silver oxide batteries with the remote control.

Batteries
Improper handling of batteries may result in leakage or explosion.

Important Safety Instructions
When using this appliance, basic precautions should always be followed to reduce the risk of fire, electric shock, and personal injury, including:

- This heater is intended for use with AC power only, and the voltage marked on the heater must match the power supply voltage.
- Do not turn on the device until it has been properly installed according to the instructions in this manual.
- Do not leave the device unattended while in use.
- Do not leave the device unattended when it is connected to the power supply.
- Place the device out of reach of children, and do not allow children to operate it.
- Periodically check the power cord for damage. If the cord is damaged in any way, do not use the device.
- Do not operate the device if the plug or power cord is damaged, or if the device is malfunctioning.

Email : **service@grandtunnel.com**

FCC Statement

This device complies with Part 15 of the FCC Rules. Operation is subject to the following two conditions: (1) This device may not cause harmful interference. (2) This device must accept any interference received, including interference that may cause undesired operation.
This device has been tested and found to comply with the limits for a Class B digital device, pursuant to Part 15 of the FCC Rules. These limits are designed to provide reasonable protection against harmful interference in residential installations. This device generates, uses, and can radiate radio frequency energy, and if not installed and used in accordance with the instructions, may cause harmful interference to radio communications. However, there is no guarantee that interference will not occur in a particular installation. If this device does cause harmful interference to radio or television reception, which can be determined by turning the device off and on, the user is encouraged to try one or more of the following measures to correct the interference:

- Reorient or relocate the receiving antenna.
- Increase the separation between the equipment and receiver.
- Connect the equipment to an outlet on a circuit different from that to which the receiver is connected.
- Consult the dealer or an experienced radio/TV technician for help.

Repairs to the appliance should only be performed by a qualified electrician. Improper repairs may expose the user to serious danger.

- Do not run the power cord under carpets or rugs.
- Do not allow the power cord to hang over sharp edges or come into contact with hot surfaces.
- Warning: To prevent overheating, do not cover or block the heater's air vents.Accidental covering may cause overheating.
- Never immerse this product in water or any other liquids.

Replacing the LED Bulbs
Note: The flame effect of this electric fireplace is produced by LED bulbs.
These LED bulbs are designed to last up to100,000 hours. It is not recommended that users replace the LED bulbs themselves. If the bulbs do not function properly for any reason, please contact a qualified technician.

Cleaning:

- Before performing any cleaning or maintenance, turn off the heater and plug it from the power outlet. Wait at least10 minutes for all parts to cool down properly.
- Use a vacuum cleaner or dusting tool to keep the heater and ventilation areas clean, preventing dust and dirt buildup.
- Clean the exterior of the fireplace with a damp cloth or wipe. Do not use abrasive cleaners or liquid sprays.

Warning: To prevent electric shock, do not open the back panel of the fireplace unless the power is turned off and the plug is unplugged. Only qualified technicians should perform repairs.
Warning: Any repair work on wiring should only be done by professional technicians and must comply with local building codes.
Warning: Stop using this electric fireplace immediately if any of the following occur: any part of the unit comes into contact with water, the fireplace is damaged or dented, the power cord is damaged or frayed, the power cord becomes hot to the touch, or the device emits smoke or smells like smoke.
Note: When using the heating function for the first time, a slight odor may occur. This is normal unless the heater has not been used for an extended period and has dust or debris covering it.

- **This appliance is equipped with a safety cutoff device that will activate if the fireplace overheats (e.g., due to a blocked vent). For safety reasons, the fireplace will not automatically restart. You must wait at least 15 minutes before unplugging and plugging the power cord back in.**

Meaning of the Strikethrough Wheelie Bin:
Do not dispose of the appliance as unsorted waste; it must be disposed of using separate collection facilities. Contact your local government for information regarding the collection system.
If the appliance is discarded in a landfill or waste site, harmful substances can seep into the groundwater, enter the food chain, and harm your health and well-being.
When replacing old appliances with new ones, retailers are legally obligated to take back your old appliance for disposal, at least free of charge.

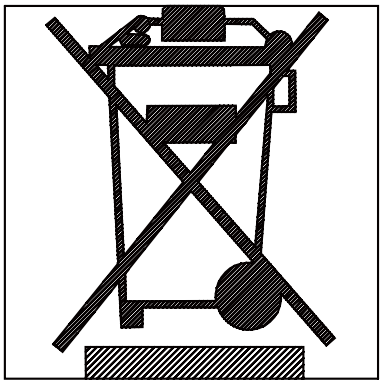

Email : **service@grandtunnel.com**

Troubleshooting

Problem	Solution
Device Won't Start	Check if the outlet is supplying power and ensure the plug is fully inserted into a 120V outlet.
Heater Not Working	Check the set temperature and ensure it is higher than the room temperature.
No Flame Effect	Contact a qualified technician for inspection.
Remote Control Not Working	Use the remote control close to the device or replace the batteries.

TV Stand

SKU:
K100000960
K100000970
K100000980
K100000990

V1.2