SERA BATHROOM DESIGNS

CALWT60X32RSB

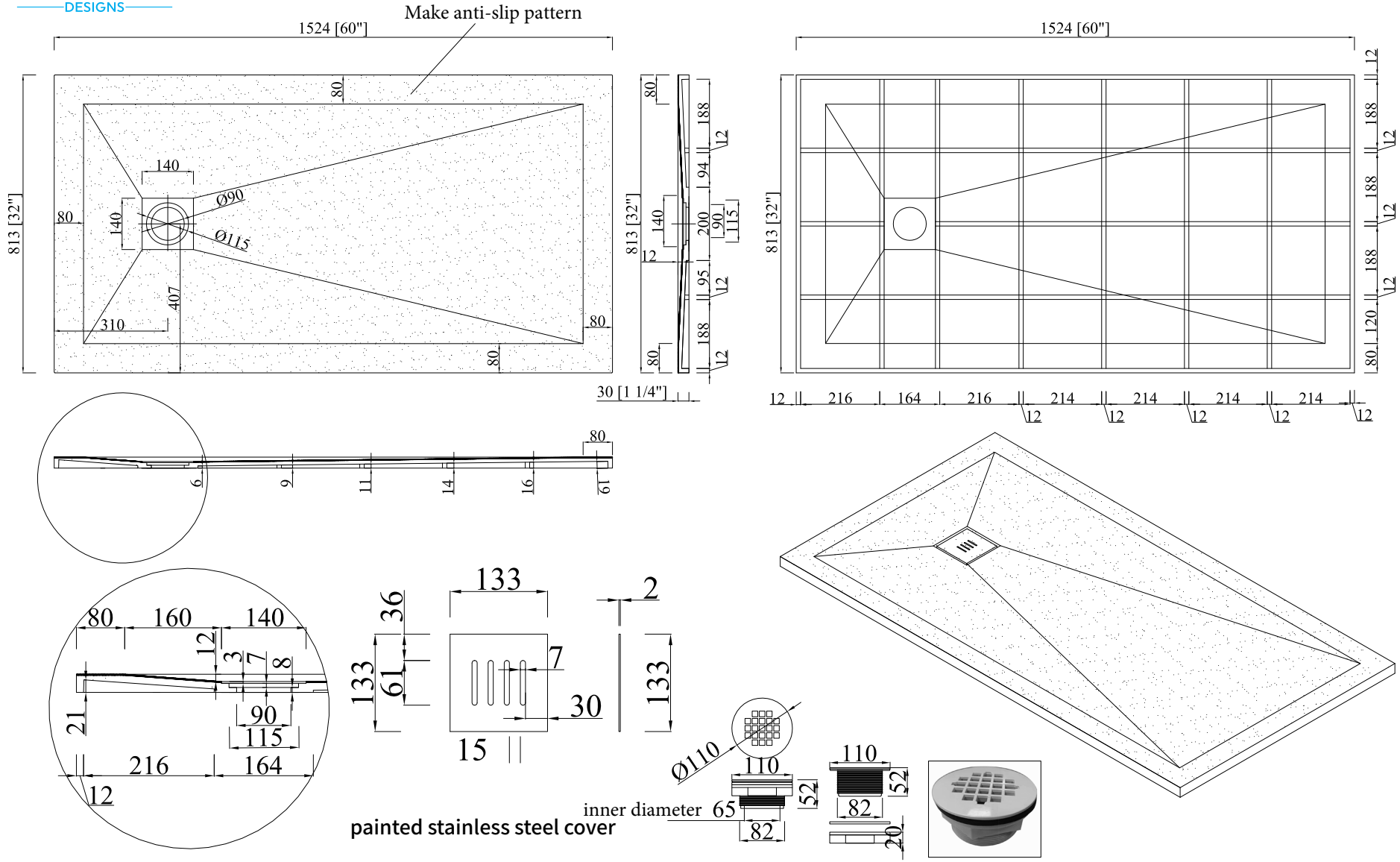

Size	>0-300mm	>300-500mm	>500-900mm	>900-1200mm	>1200mm以上		Model	GM-3132	Customer Model	CSTM-3117-6032	Drawing No	GM20240528-02
mm	±1	±2	±3	±4	±5				Edition	A/3		
1524mm*813mm*30mm							Tolerance	±2	Start Date	20240528		