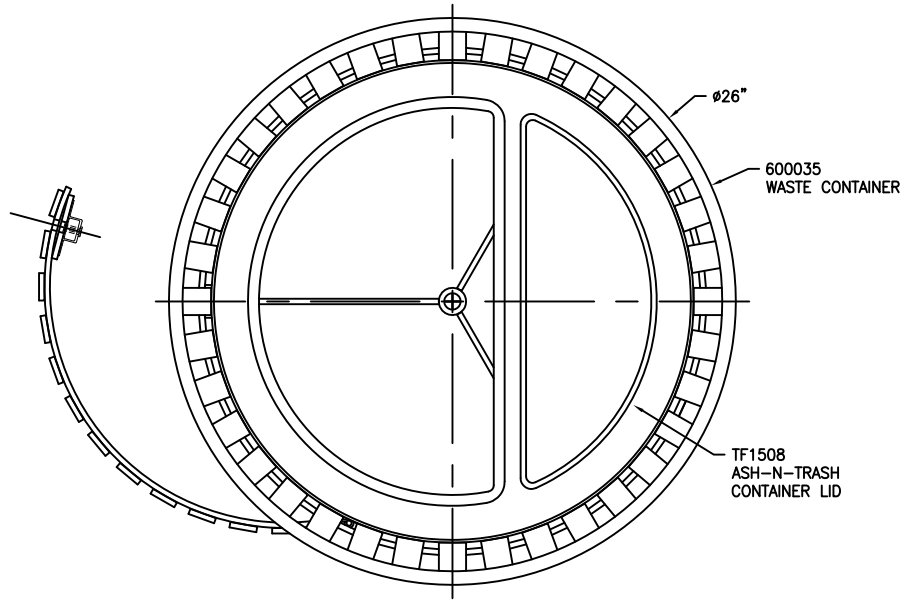

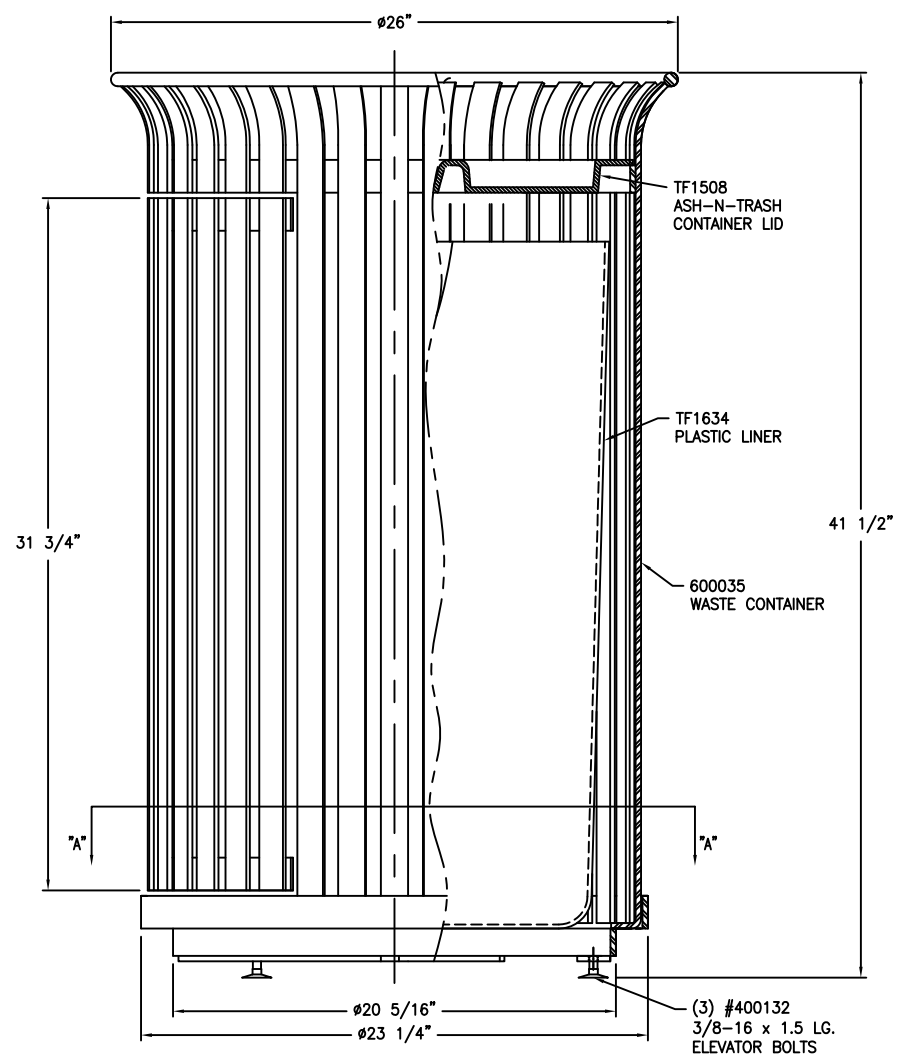

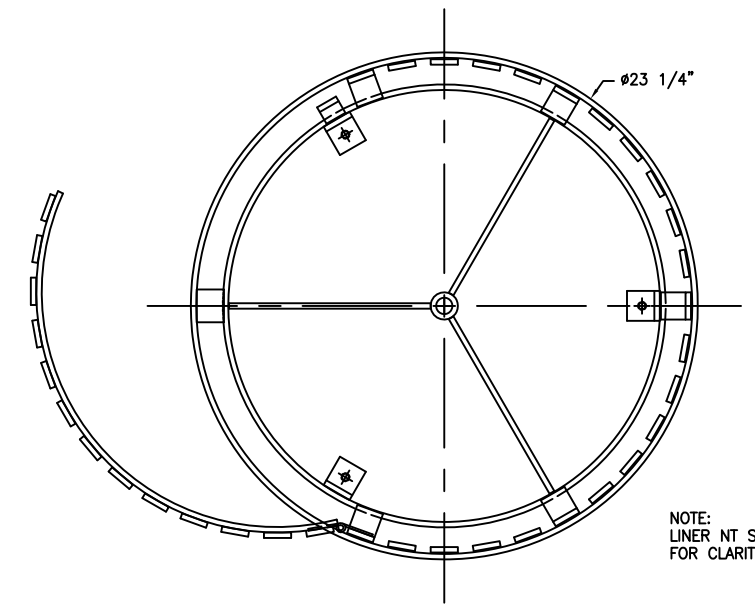

SECTION "A-A"

REV	DESCRIPTION	NAME	DATE
1	------	---	--/--/--

WAUSAU TILE

P.O. BOX 1520 WAUSAU, WISCONSIN 54402-1520 800/388-8728
E-MAIL: WTILE@WAUSAUTILE.COM
WEB SITE: WWW.WAUSAUTILE.COM

DRAWN BY M JOHNSON	TITLE ASH-N-TRASH CONTAINER W/DOOR	MATERIAL –	
JOB NO.	JOB	WEIGHT	
SCALE 1/4" = 1"	UNLESS OTHERWISE SPECIFIED DIMENSIONS ARE IN INCHES ANGLES ±0.5° FRACTIONS ± 1/64" 2 PL ±0.01 3 PL ±0.005	DATE 6/17/11	FINISH OPTIONS
		D	DWG. NO. MF3223