Armless Chair

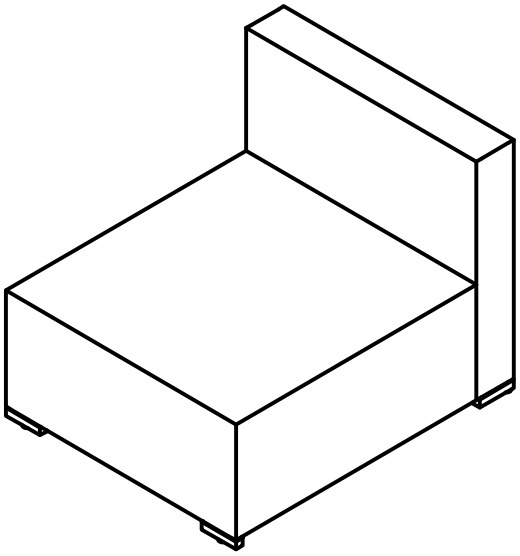

Thank You for Choosing us!

Our goal is to provide high quality outdoor furniture with outstanding customer service-all at an affordable price.
Please let us know how we are doing!

Problems?

We will fix it immediately.

Item no.	Reference Image	Description	Qty
E		Seat Back	1
H	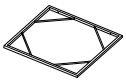	Seat Base	1
I	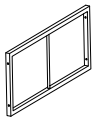	Side Panel	2
J	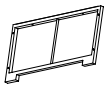	Front Panel	1
S003		M6x35 Hex Socket Head Screw	10
S004		M6x40 Hex Socket Head Screw	2
W002		Flat Washer	12
T001		S4 Allen Key	1

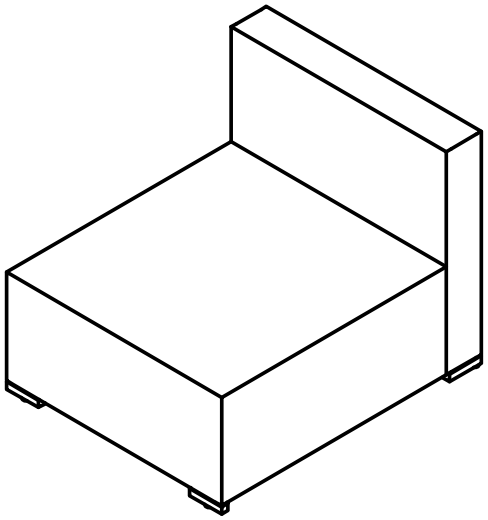

STEP 1

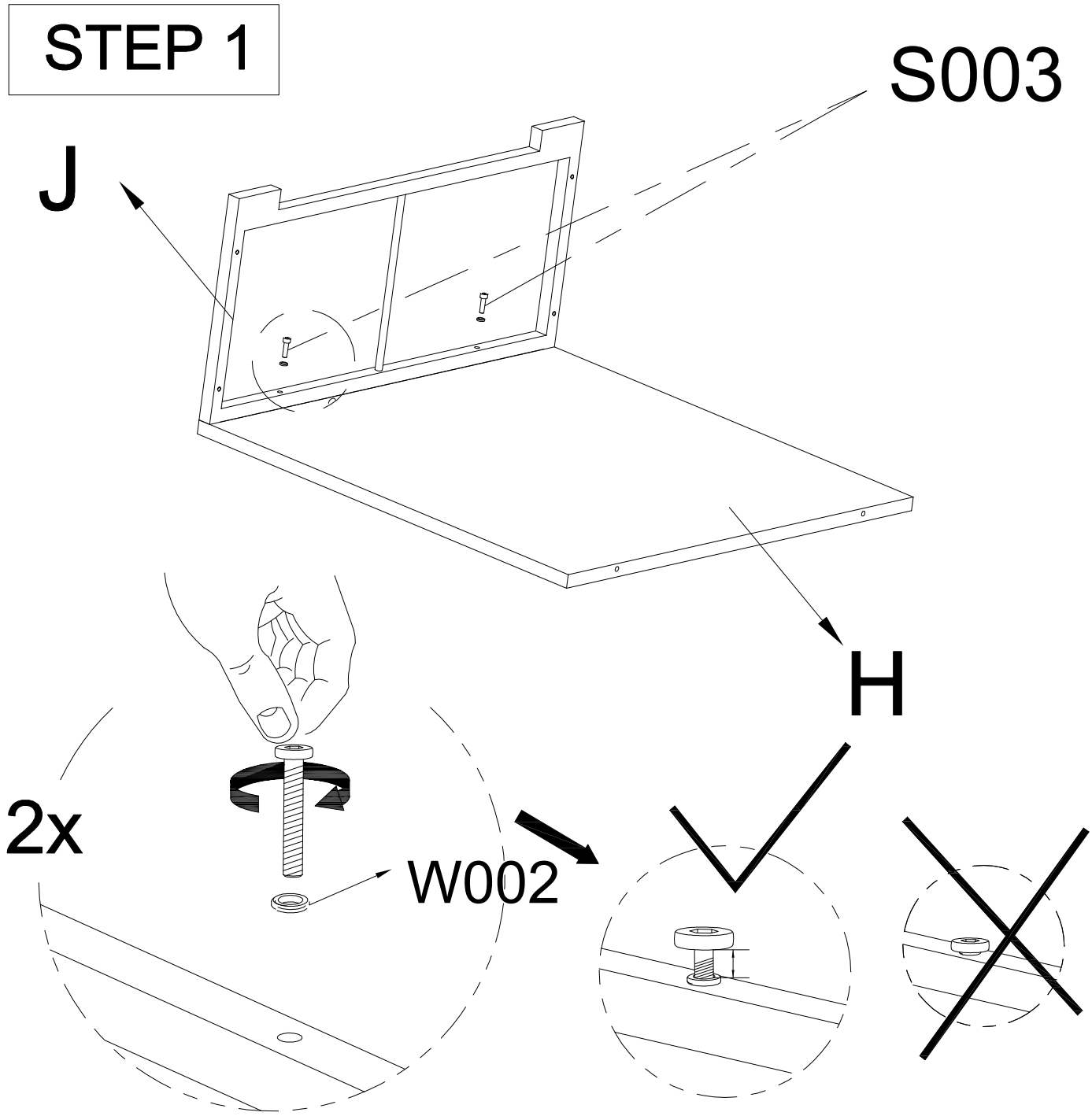

Do Not Tighten The Screws Completely!

STEP 2

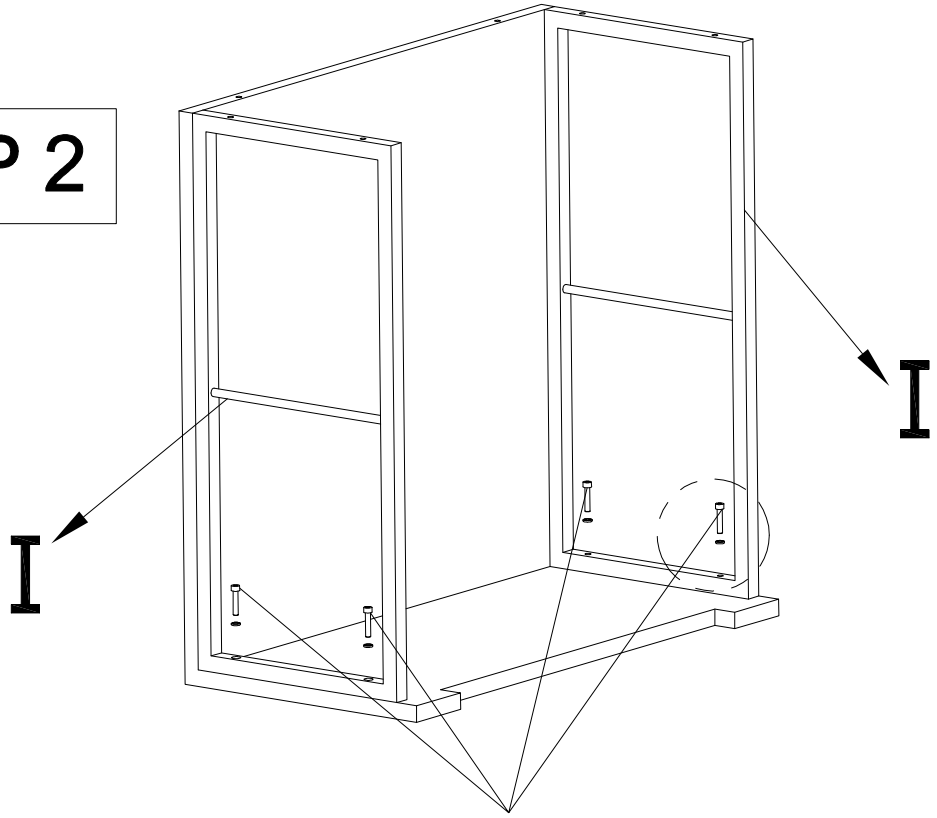

S003

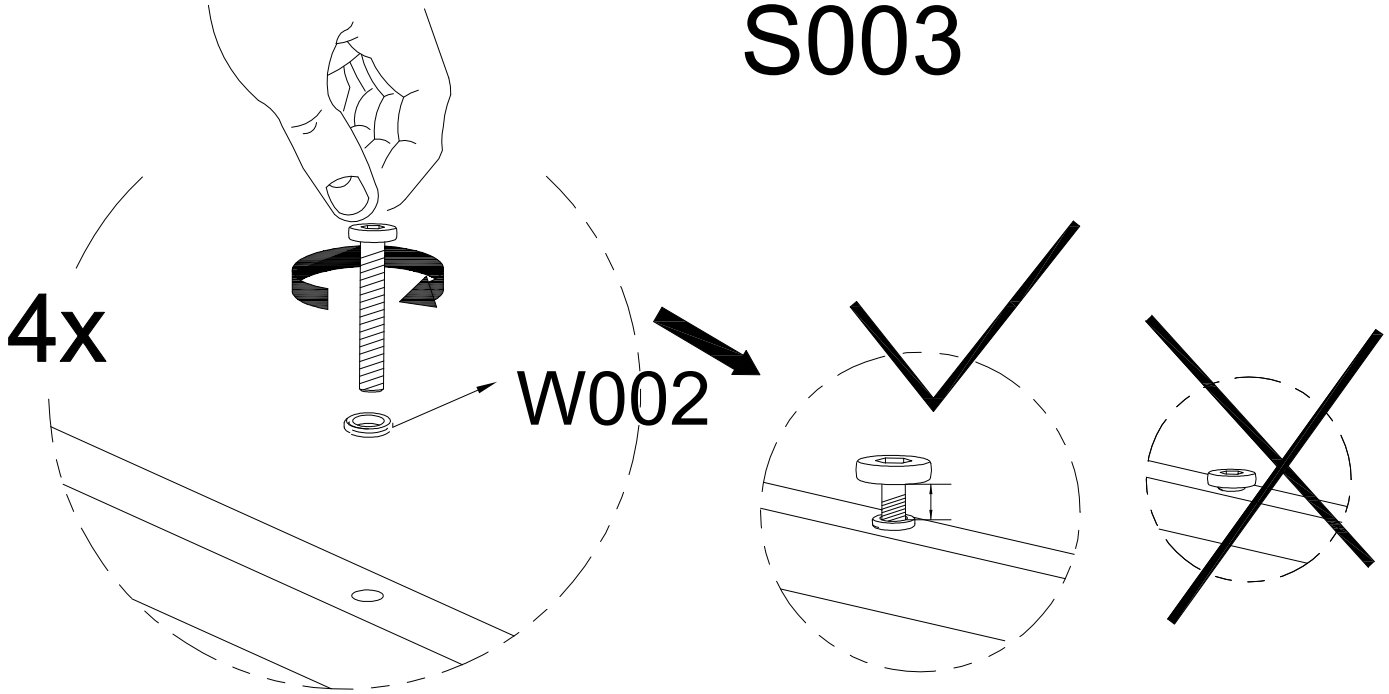

Do Not Tighten The Screws Completely!

STEP 3

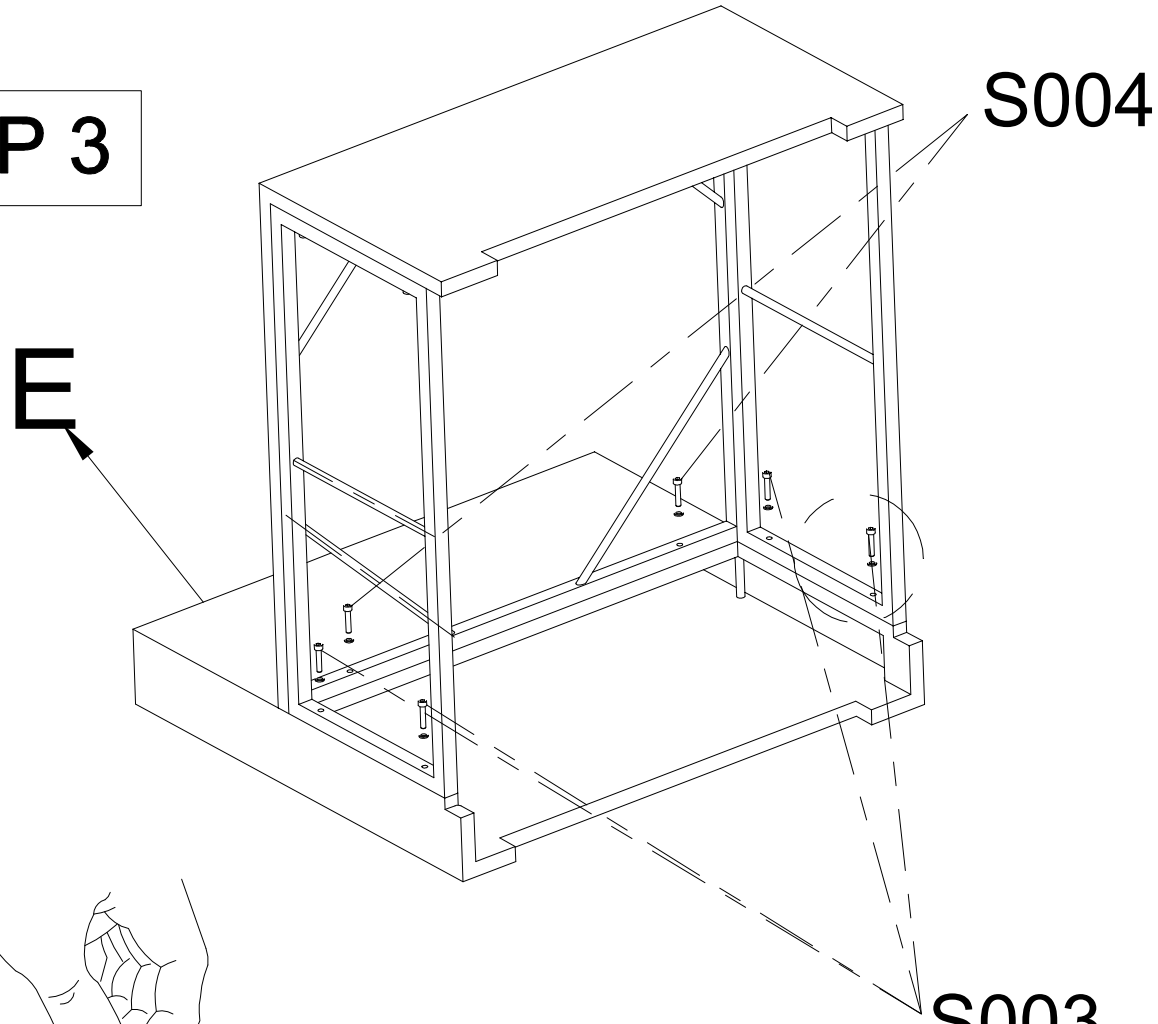

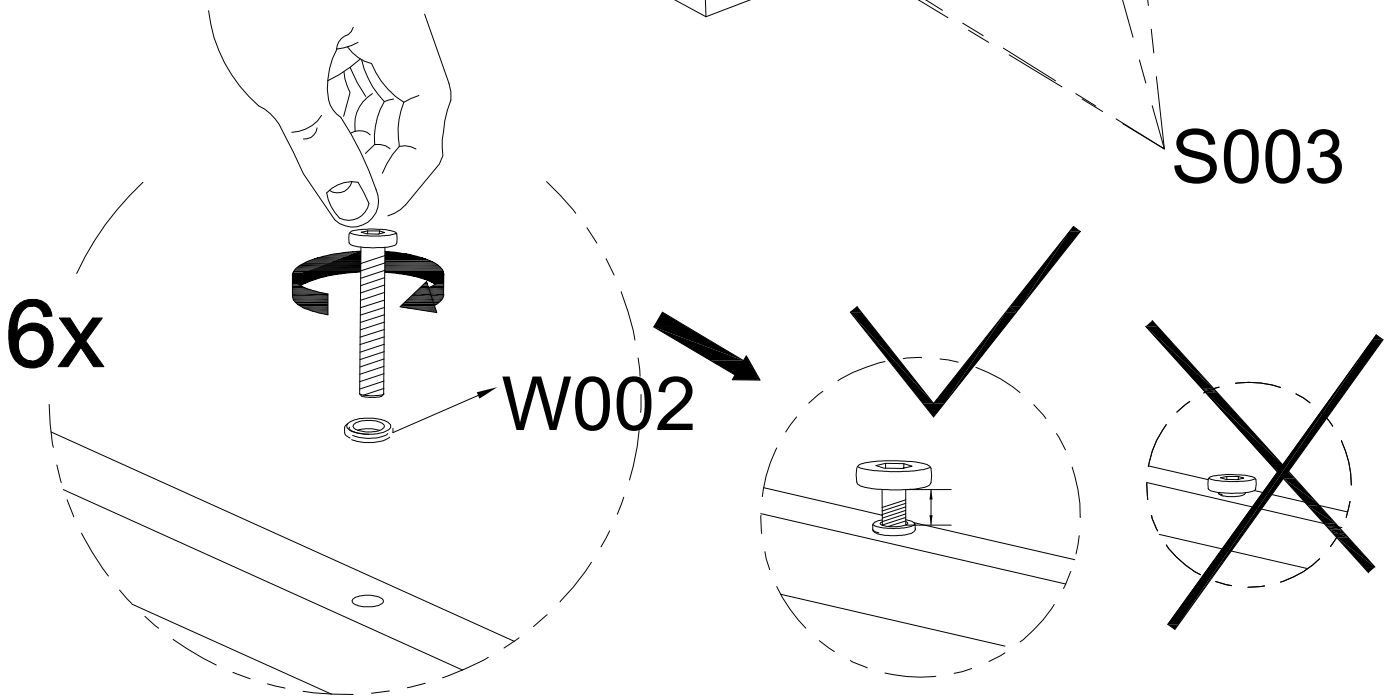

Do Not Tighten The Screws Completely!

STEP 4

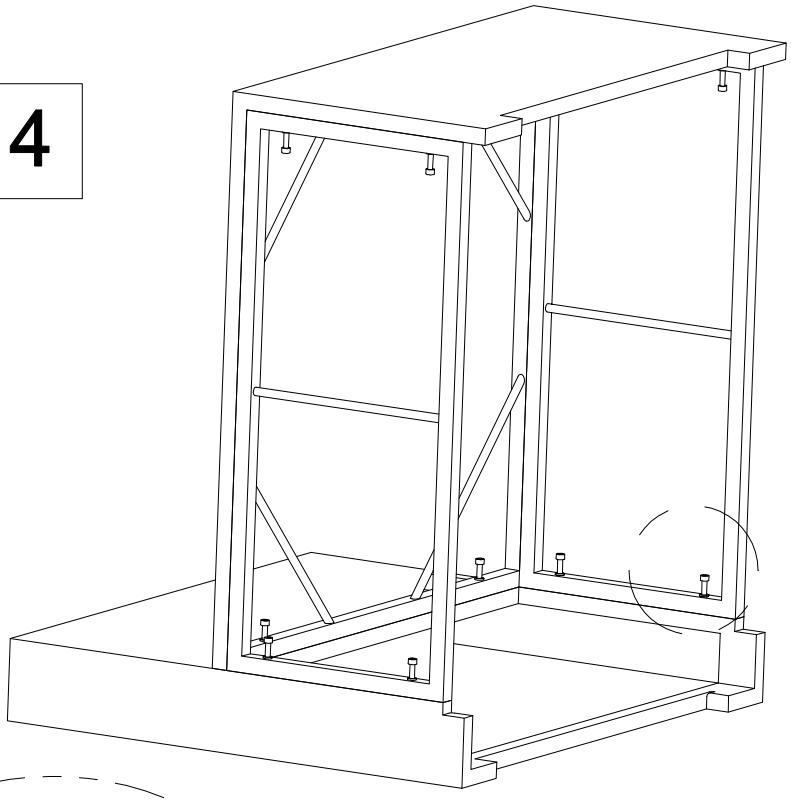

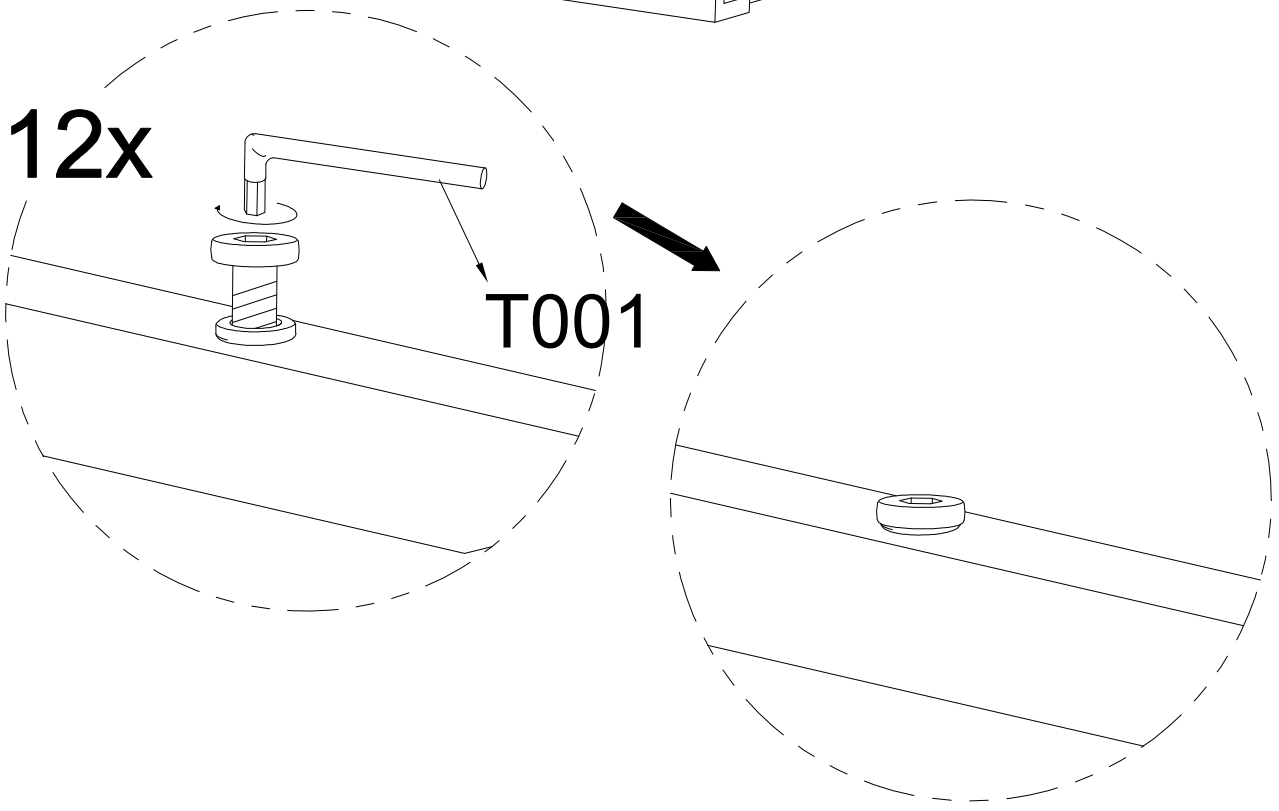

Tighten The Screws Completely Now!

STEP 5

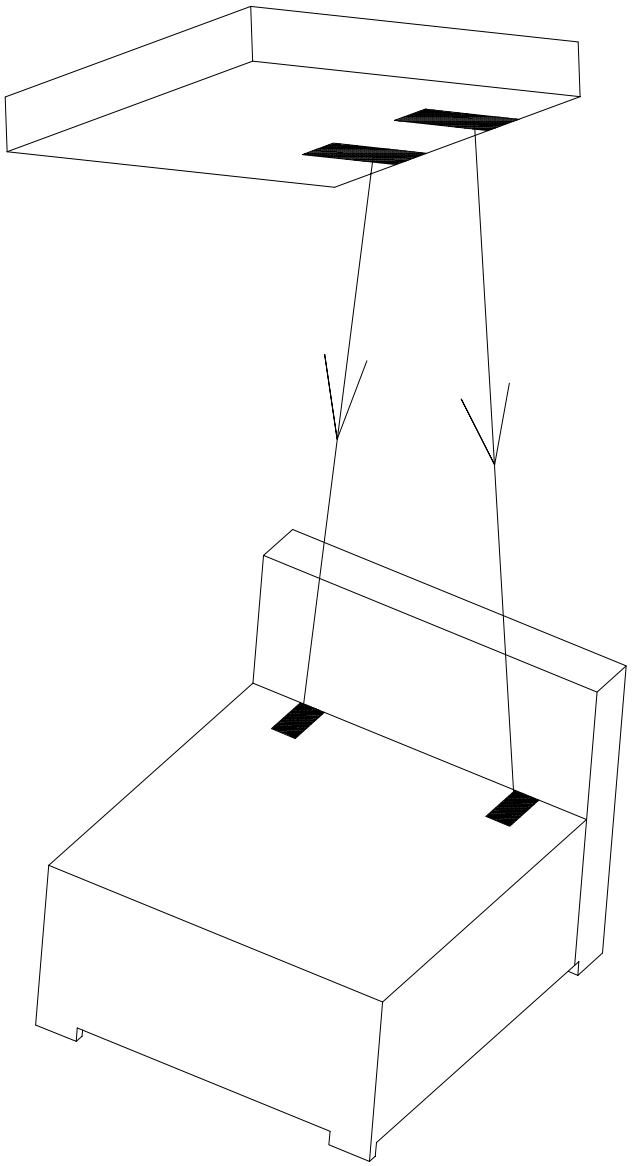



You might need plastic clips to connect each sofa after all assembling.

