Assembly Instructions

Caution : You must read this before you proceed

Care & Maintenance



- Not for commercial use. For residential use only.



- Furniture may scratch floors. We recommend using furniture pads to protect your floors.



- Do not put hot items directly on furniture surface.



- Do not clean furniture with harsh cleansers or polish.



- Do not place furniture under direct sunlight.



- Do not place furniture near heating or cooling vents.



- Do not write on furniture without a padded barrier to protect the surface.



- Do not place furniture outside . For indoor use only.



- Stains may be removed with mild soap solution and damp cloth.



- Children should not climb or jump on the furniture.



- Dust and pick-up spills using a clean, non-colored, lint-free cloth.

Please look in **The Box** for hardware packs and legs.
Sets often ship in multiple boxes and may arrive a day or two apart.

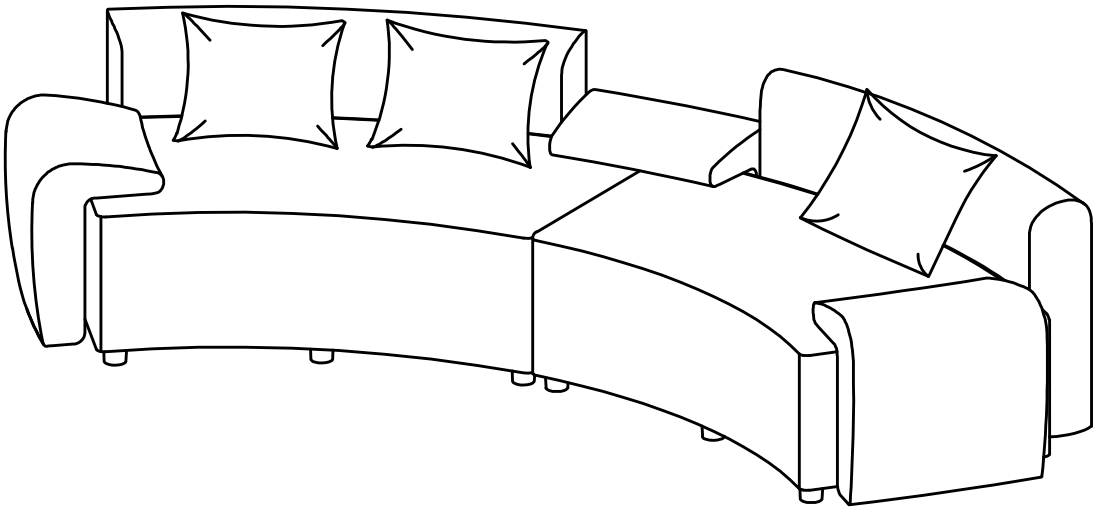

Parts List

Label	Picture	Description	QTY
A	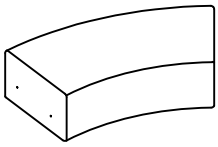	Left Seat Frame	1
B	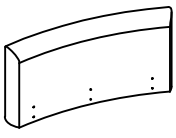	Backrest	1
C	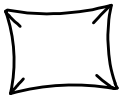	Pillow	1
D		Legs	12

Hardware

Label	Picture	Description	QTY
①		Allen Wrench	1
②	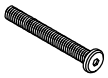	Bolt 5/16" x 50mm	20+1
③		Flat Washer Ø8 5/16"	20+1

Parts List

Label	Picture	Description	QTY
Ⓔ	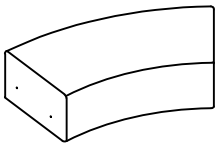	RightSeat Frame	1
Ⓑ	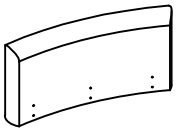	Backrest	1
Ⓖ	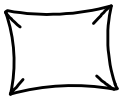	Pillows	2

Parts List

Label	Picture	Description	QTY
Ⓕ	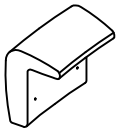	Arms	3

Assembly Preparation

Before Beginning Assembly:

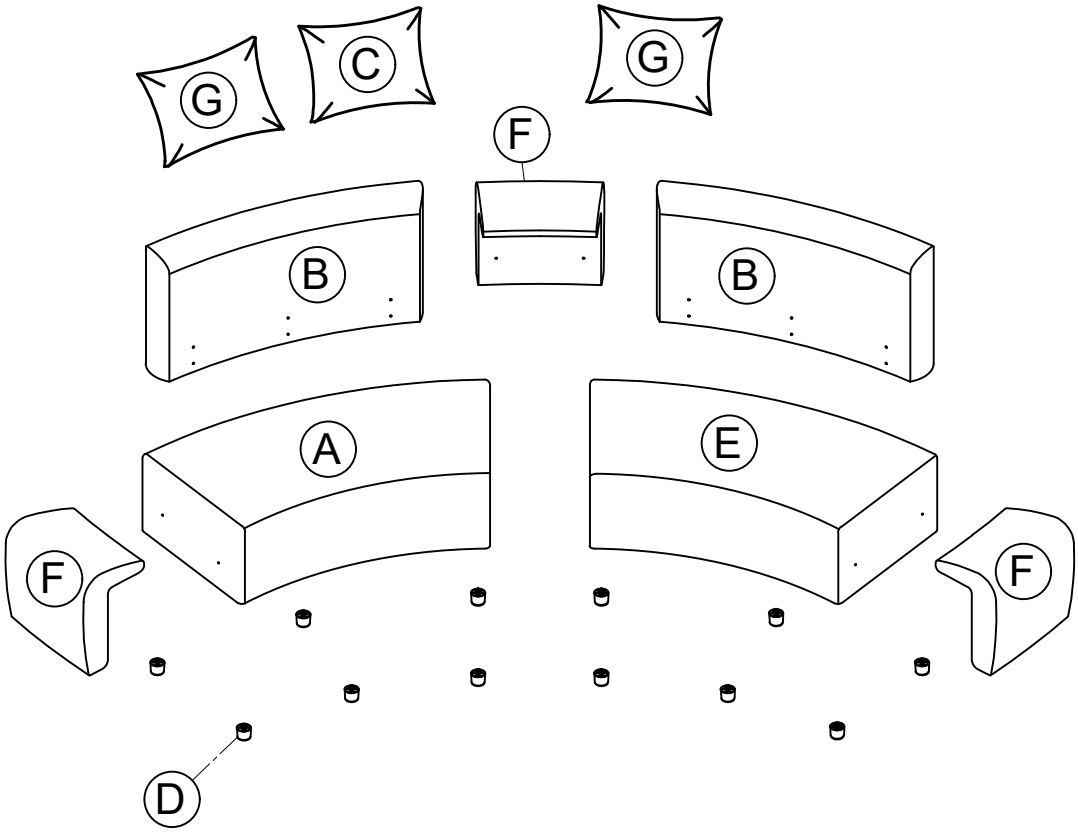

- Read instructions, cover to cover-
- Have 2 adults on hand for assembly-
- Do not assemble on flooring or carpet-
- Assemble on a clean non-marring surface (packing foam)-
- Save all packaging until finished-

Assembly Steps

Overview

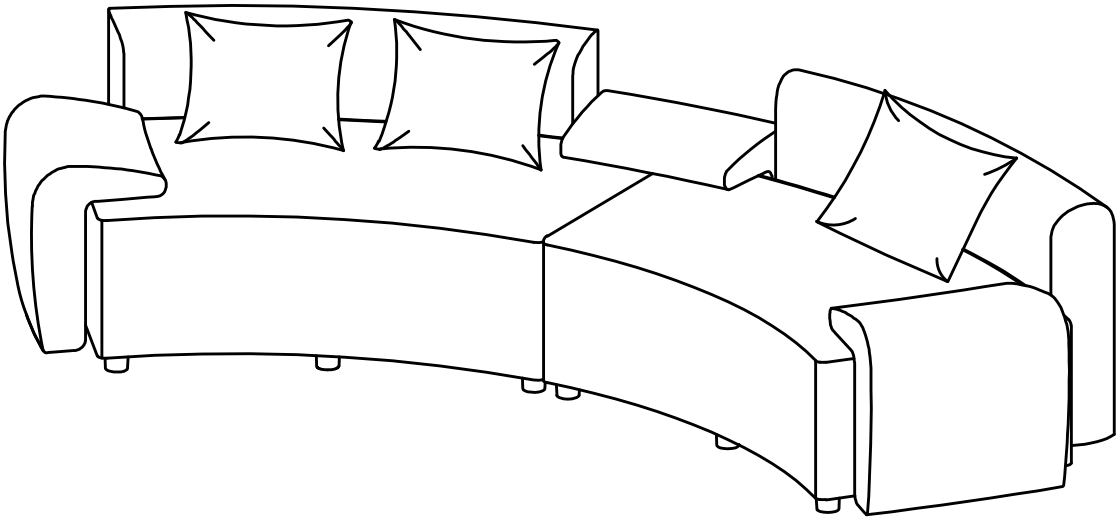

This Sofa has multiple parts and may require up to some 45 minutes to assemble. To give you an overview of the Sofa parts, the above picture is to help you put the various parts into perspective. Please read through the instructions below to familiarise yourself with the parts and steps before assembly.

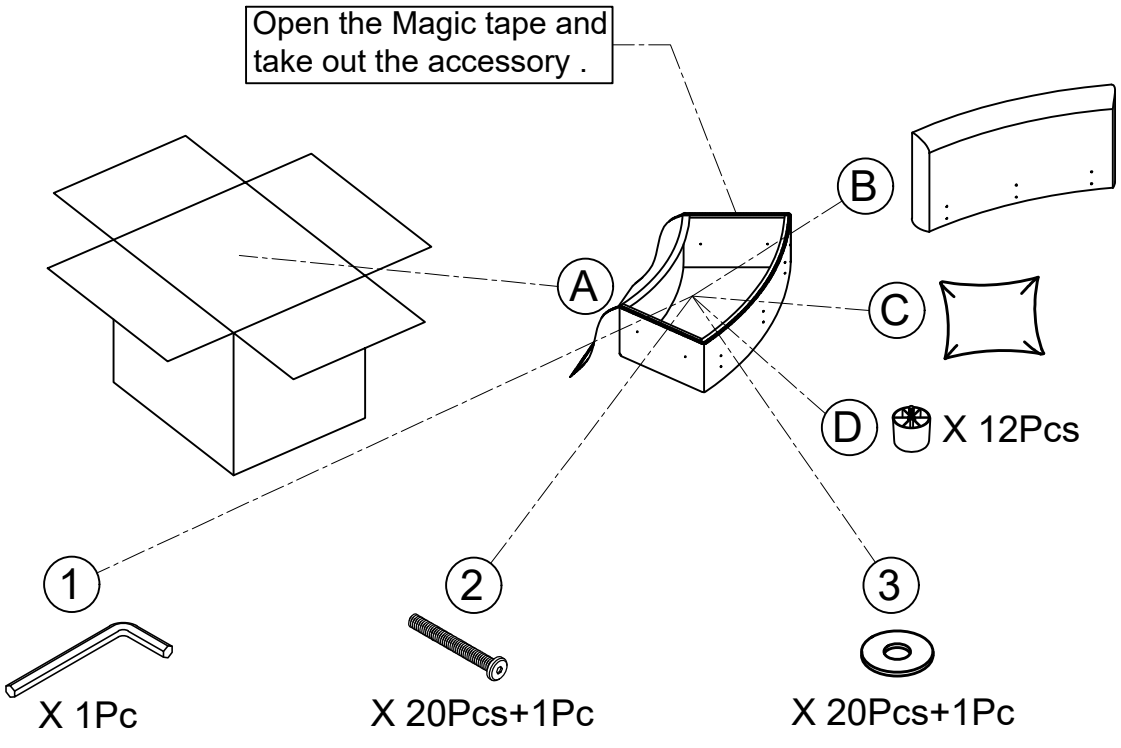

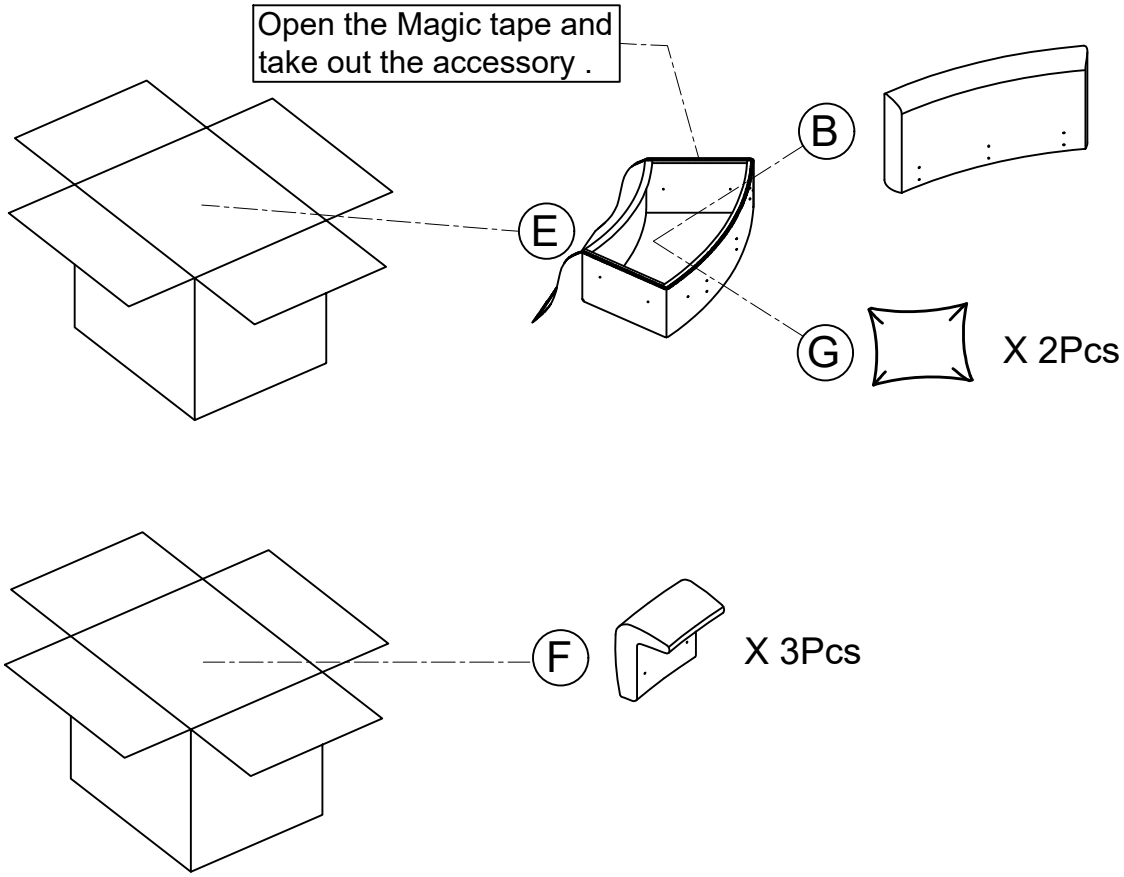

STEP 1: Remove the parts and accessories from the carton .

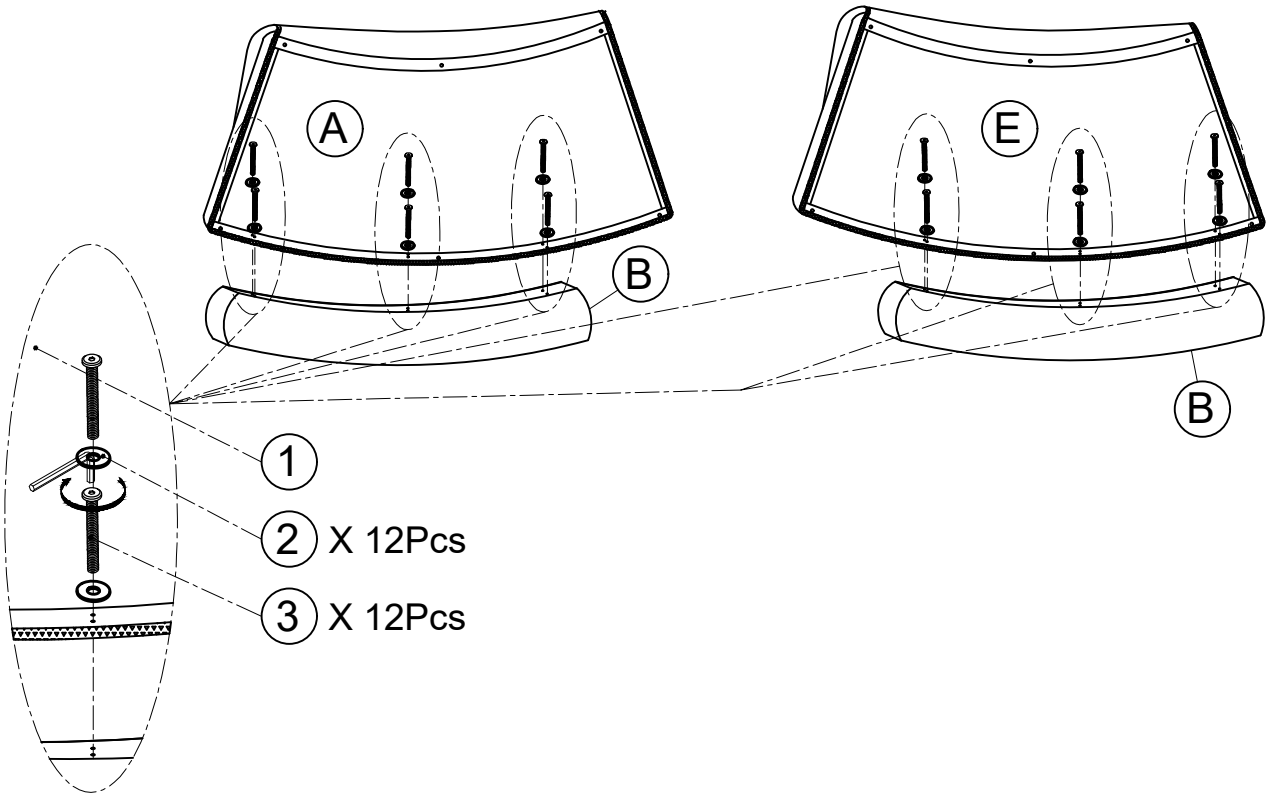

STEP 2: Attach the **Backrest (B)** to the **Left Seat Frame (A)** and **Right Seat Frame (E)** using **Bolts** (2) and **Flat washers**(3),then tighten securely with an **Allen wrench** (1).

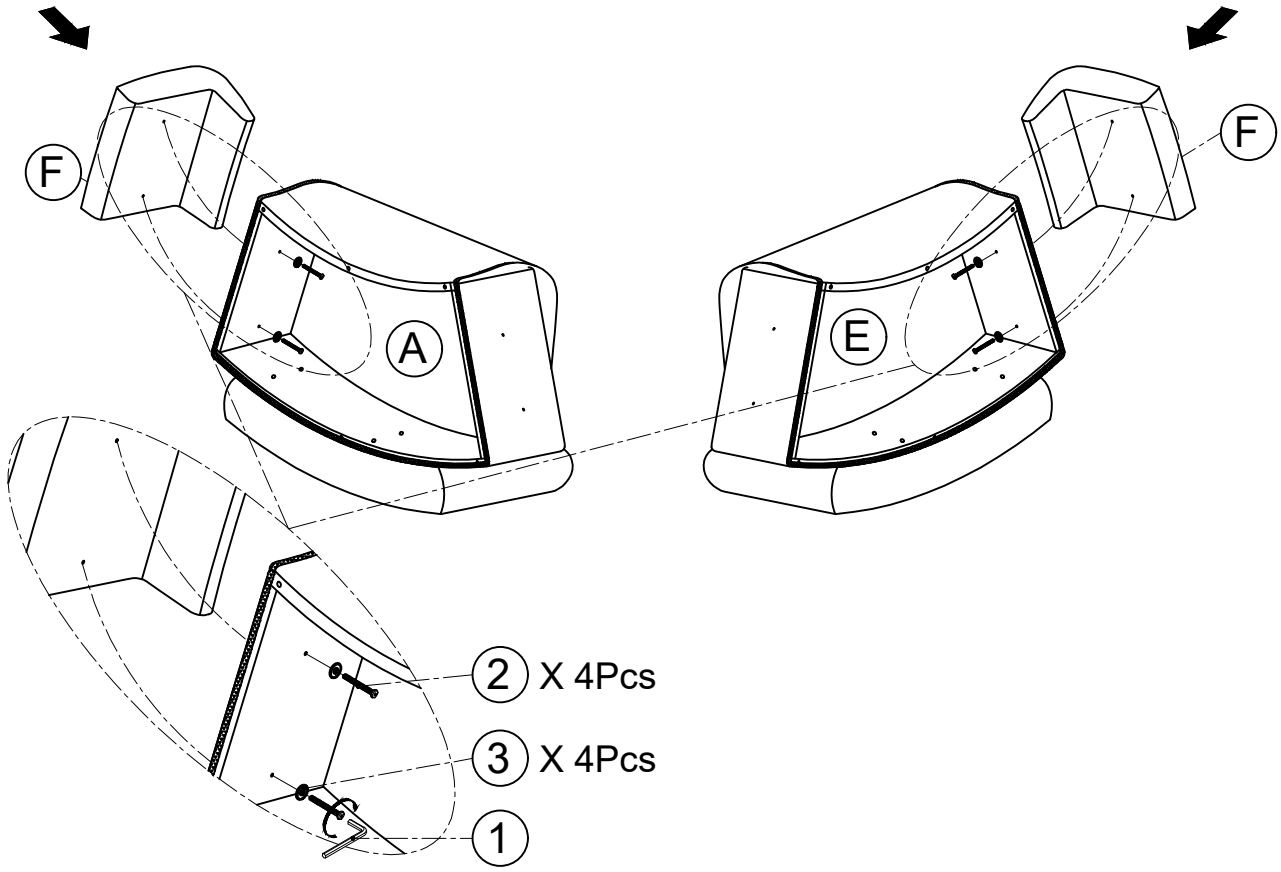

STEP 3: Attach the **Arm (F)** to the **Left Seat Frame (A)** and **Right Seat Frame (E)** using **Bolts** (2) and **Flat washers** (3),then tighten securely with an **Allen wrench** (1).

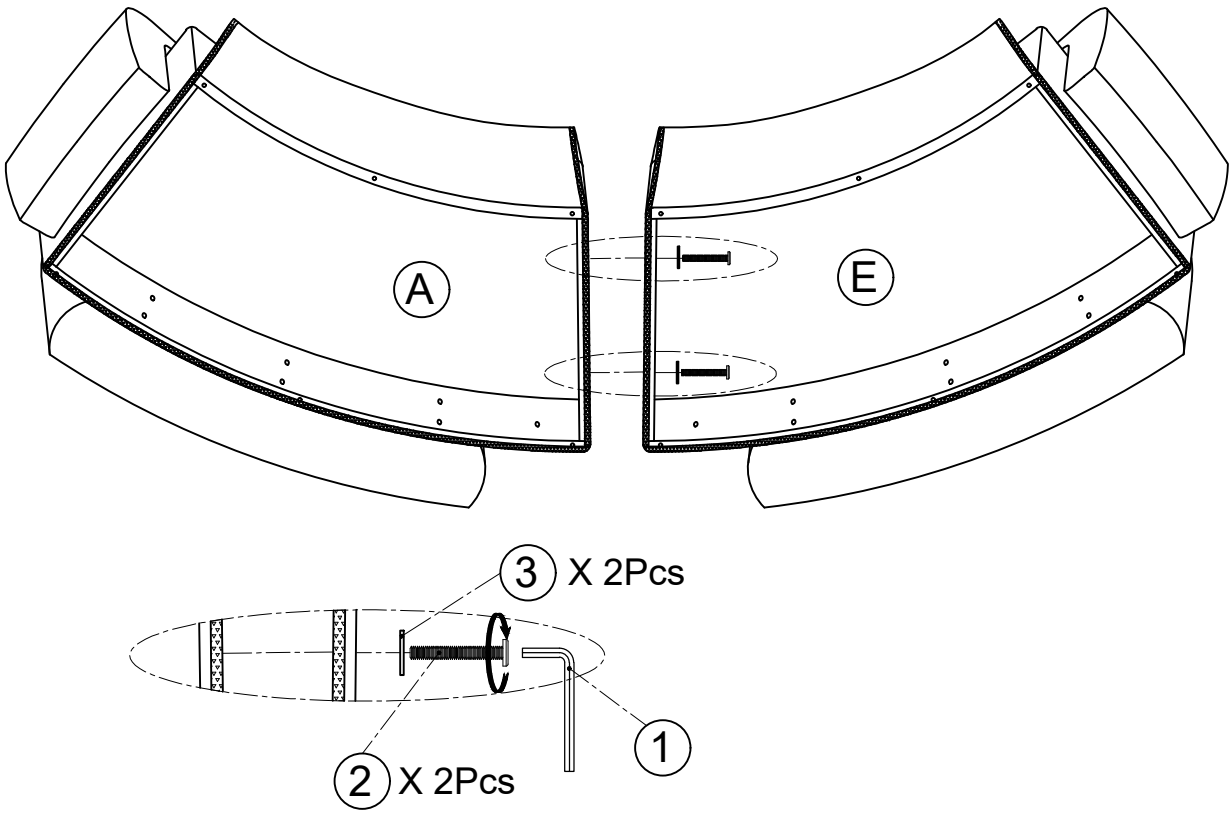

STEP 4: Attach **Left Seat Frame (A)** to **Right Seat Frame (E)** using **Bolts** (2) and **Flat washers** (3),then tighten securely with an **Allen wrench** (1).

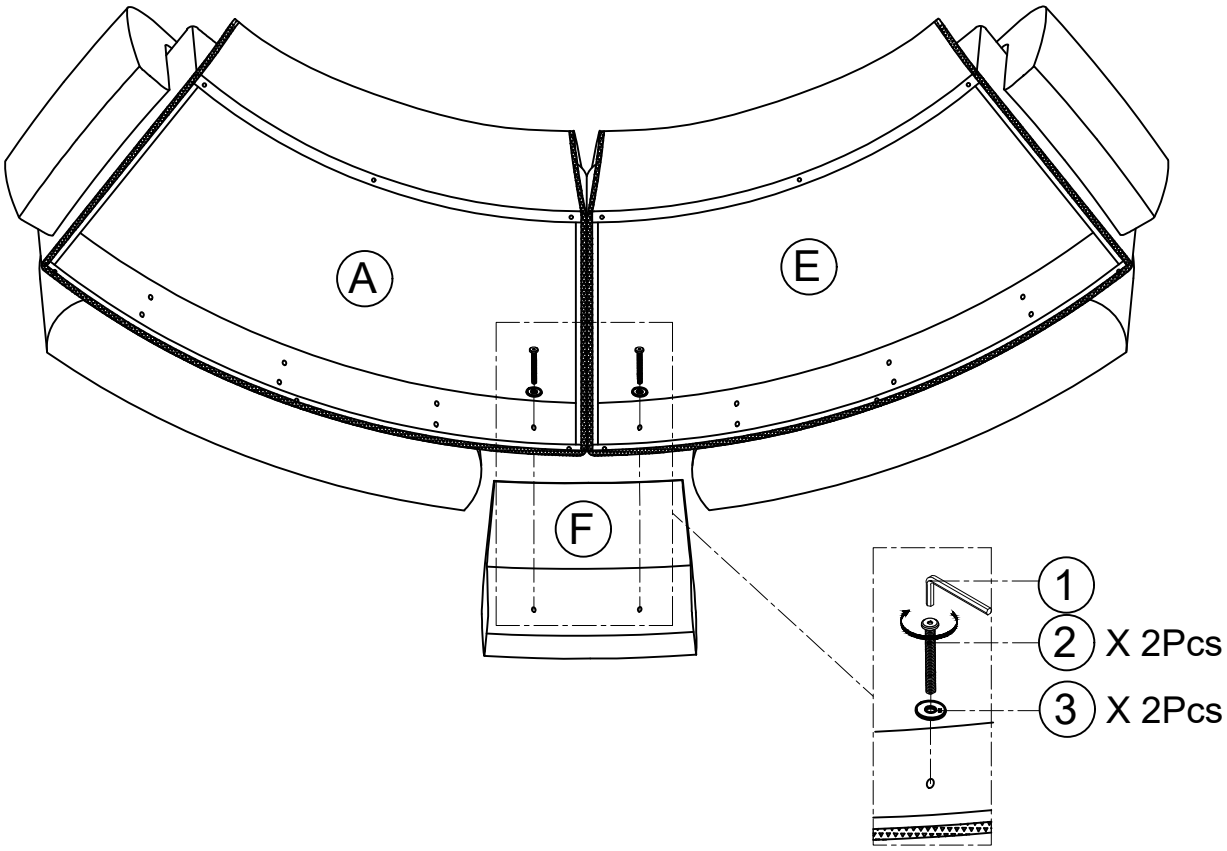

STEP 5: Attach the **Arm (F)** to the **Left Seat Frame (A)** and **Right Seat Frame (E)** using **Bolts** (2) and **Flat washers**(3),then tighten securely with an **Allen wrench** (1).

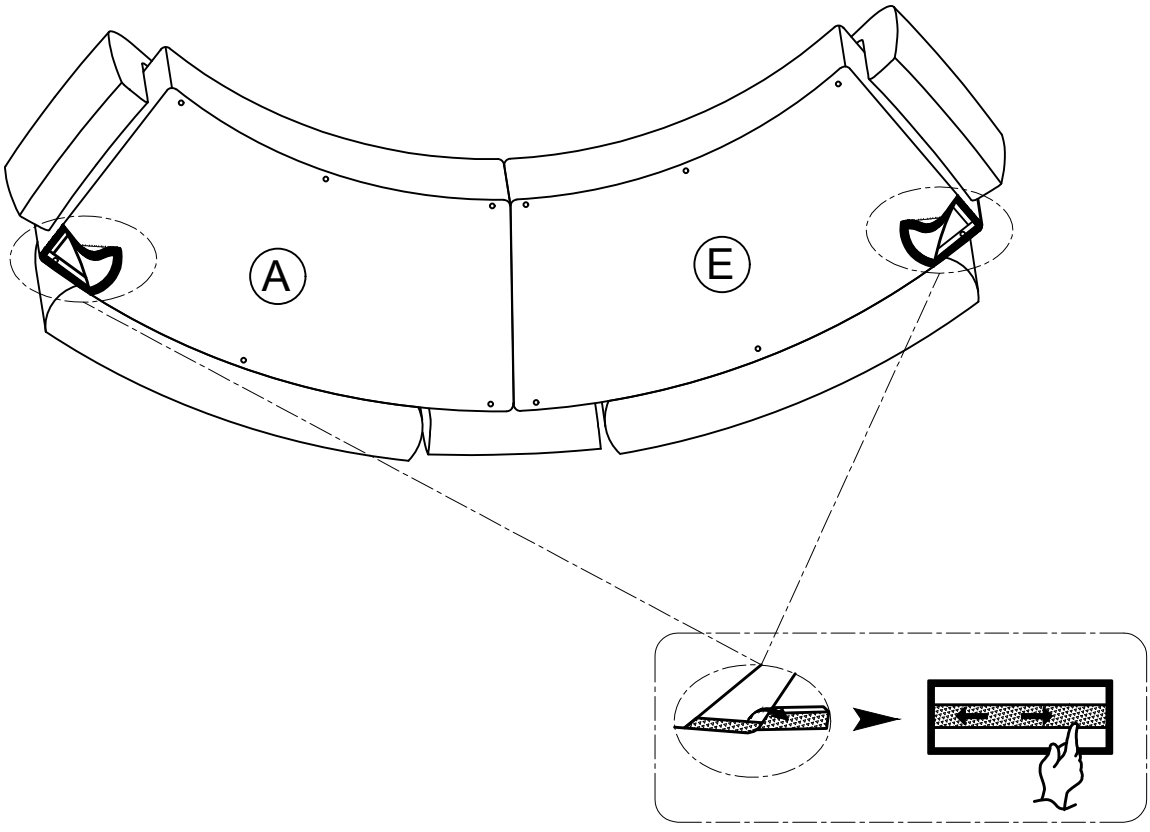

STEP 6: Press the fabric flap firmly onto the underside of **Left Seat Frame (A)** and the **Right Seat Frame (E)** with Magic tape.

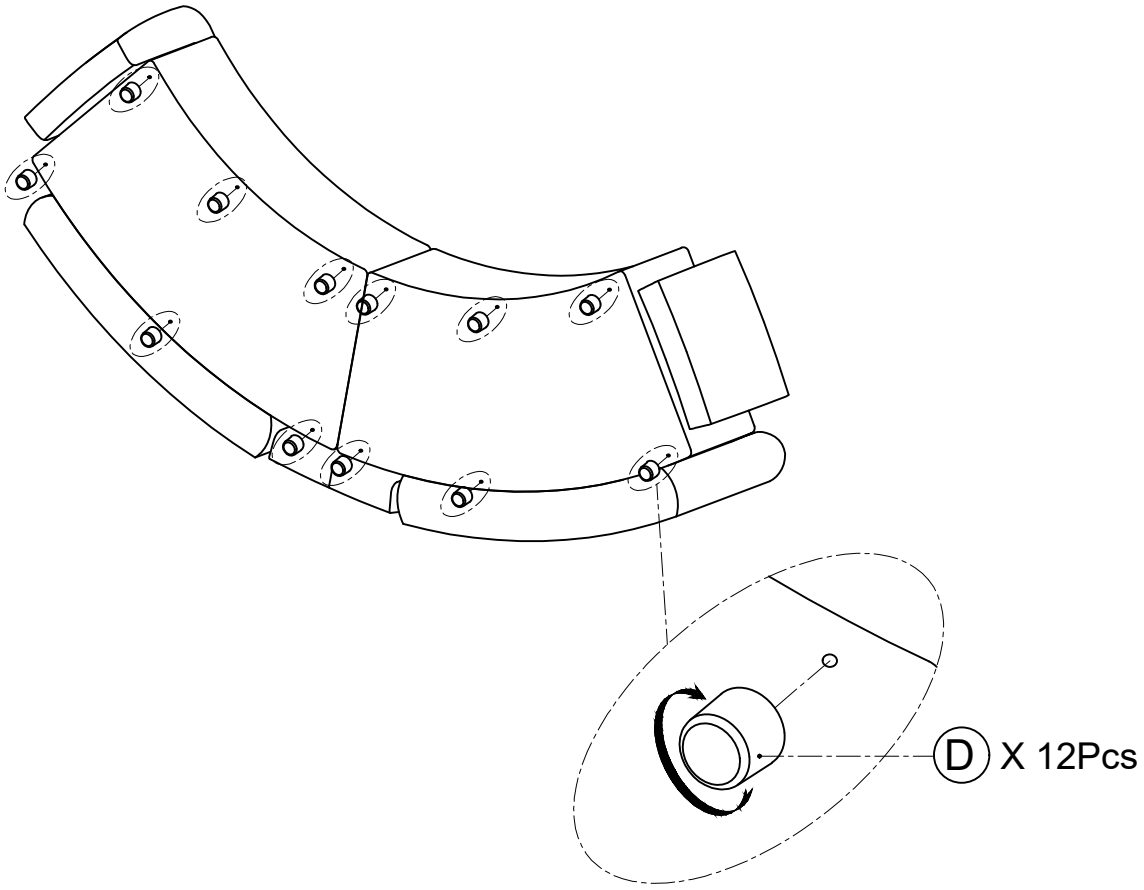

STEP 7: Attach the **Legs (D)** onto **Left seat frame (A)** and **Right seat frame (E)** by rotating it clockwise .

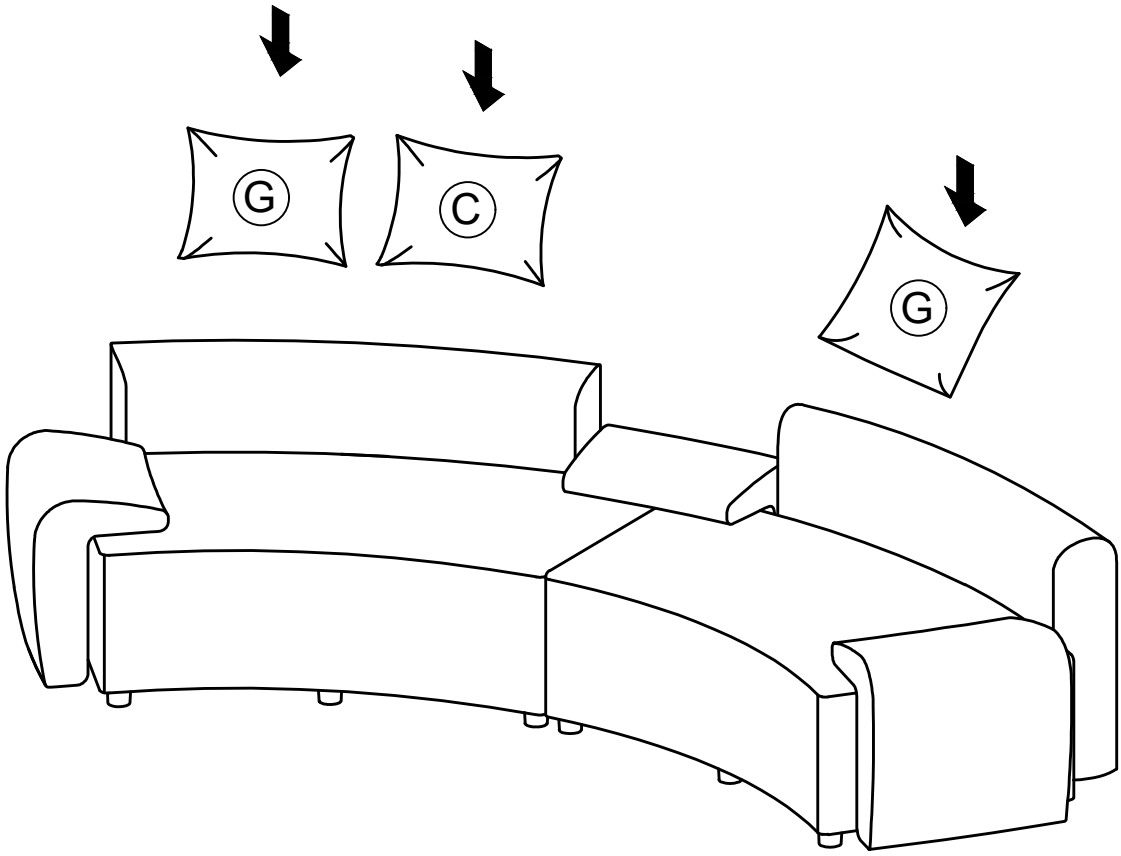

STEP 8: Place the **Pillow (C & G)** in position

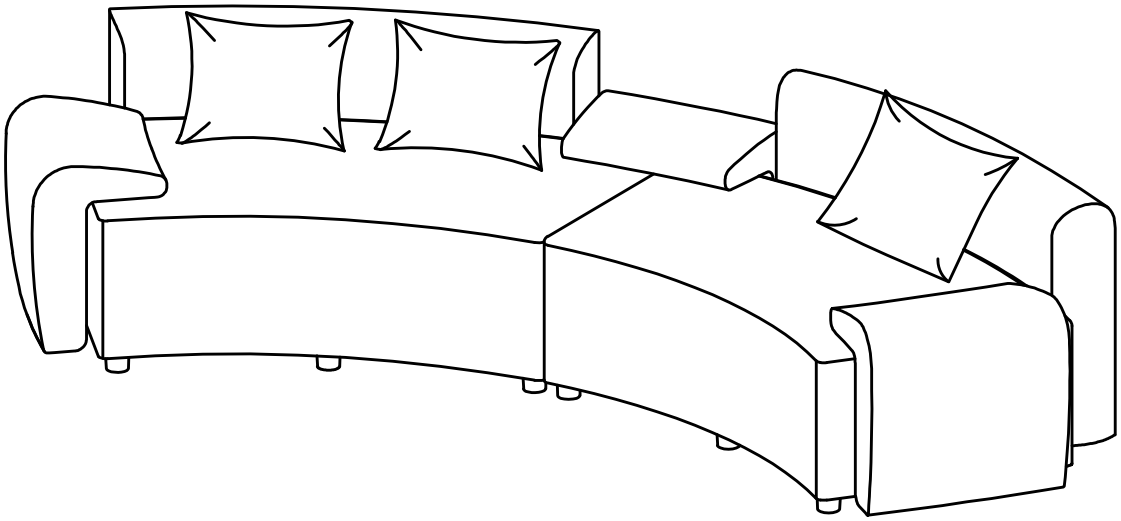

STEP 9:

Place your sofa on the right side.

·Your Sofa is ready for use.

·This Sofa can only be used on a flat, level surface.

·Move your new furniture carefully, with two people lifting and carrying the unit to its new location. ·Your furniture can be disassembled and reassembled to move. ·Clean the product with a soft damp cloth. DO NOT use harsh chemicals or abrasive cleaners .

Questions & Answers about Proposition 65

- What is Proposition 65?

Proposition 65 requires businesses to provide warnings to Californians about significant exposures to chemicals that cause cancer, birth defects or other reproductive harm. These chemicals can be in the products that Californians purchase, in their homes or workplaces, or that are released into the environment. By requiring that this information be provided, Proposition 65 enables Californians to make informed decisions about their exposures to these chemicals.

Proposition 65 also prohibits California businesses from knowingly discharging significant amounts of listed chemicals into sources of drinking water.

Proposition 65 requires California to publish a list of chemicals known to cause cancer, birth defects or other reproductive harm. This list, which must be updated at least once a year, has grown to include approximately 900 chemicals since it was first published in 1987.

- What types of chemicals are on the Proposition 65 list?

The list contains a wide range of naturally occurring and synthetic chemicals that include additives or ingredients in pesticides, common household products, food, drugs, dyes, or solvents. Listed chemicals may also be used in manufacturing and construction, or they may be byproducts of chemical processes, such as motor vehicle exhaust.

- What does a warning mean?

If a warning is placed on a product label or posted or distributed at a workplace, a business, or in rental housing, the business issuing the warning is aware or believes that it is exposing individuals to one or more listed chemicals.

By law, a warning must be given for listed chemicals unless the exposure is low enough to pose no significant risk of cancer or is significantly below levels observed to cause birth defects or other reproductive harm.

- Where can I get more information on Proposition 65?

If you have specific questions on the administration or implementation of Proposition 65, you can contact OEHHA's Proposition 65 program at P65.Questions@oehha.ca.gov, or by phone at (916) 445-6900.