SIMPLIHOME

Hennessy / Hartland / Corbett

40W 2 Door Utility Laundry Cabinet with SS Sink & Faucet

Model # AXCLDYHEN40-SS-XXX

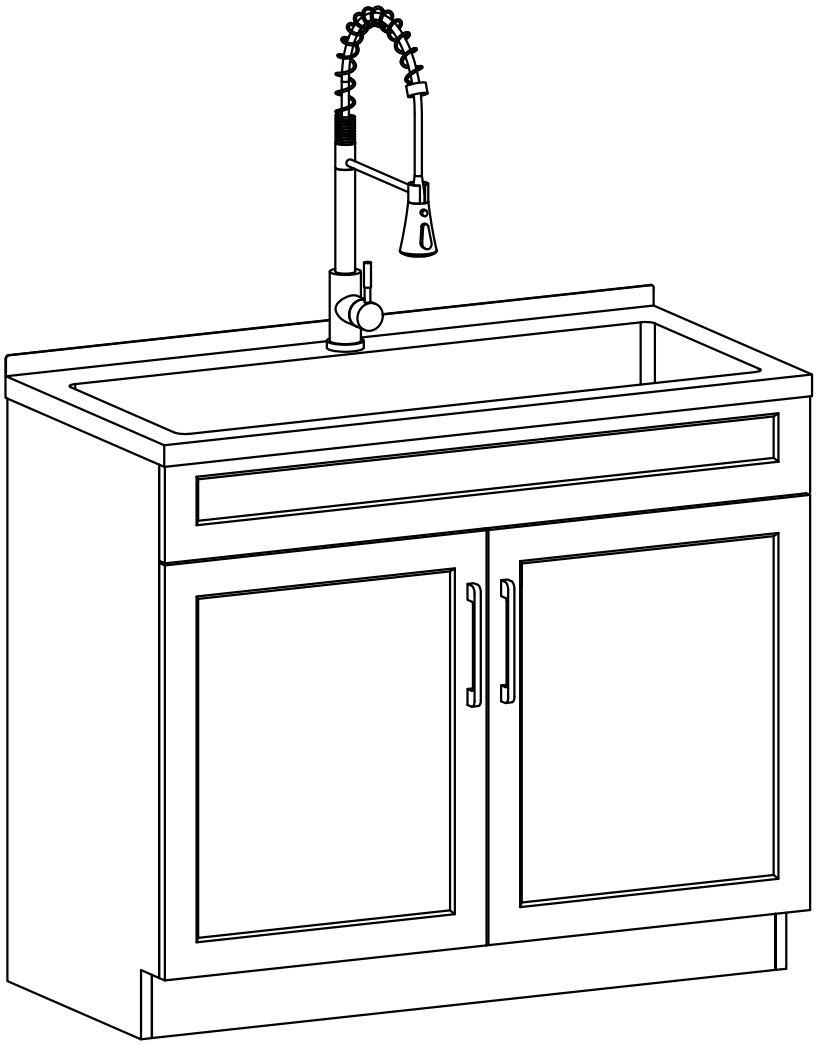

brooklyn + max™ Wyndenhall™ Home Decor

SIMPLIHOME

Claim Your Free Gift

Your opinion pays: Earn a gift!

Review your purchase and receive a gift.* It could be a gift card, Simpli Rewards points, or another special reward.

CLAIM YOUR REWARD NOW! ▶

simpli-home.com/get-free-gift



**Offer valid for reviews posted within 30-days of purchase.*

SIMPLIHOME

Need Help With Assembly?

Assembly made easy: book a Tasker!

We've teamed up with Taskrabbit for furniture assembly.* Choose your service, check out, and a background-checked Tasker will build it for you at a fixed, upfront price.

1. Scan the QR code or visit the link below.
2. Add your assembly service to the task cart.
3. Check out and schedule a time that suits you.

BOOK A TASKER NOW! ▶

simpli-home.com/assembly

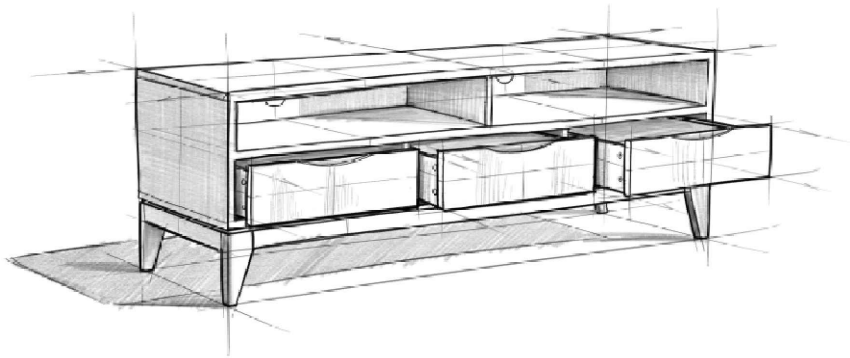

**Taskrabbit is an independent third-party service.*

SIMPLIHOME

For Fastest Customer Service:

1. Open your phone's camera.
2. Point your phone's camera at the QR code to scan.
3. Click on the pop up.
4. You'll be taken to our customer service page.
5. Fill the form with your order information and issue.
6. Submit form.
7. A customer service associate will contact you.

Other ways to contact us…



Email Us

customerservice@simpli-home.com



Visit Us

Visit our site directly at
www.simpli-home.com



Call Us

1-866-518-0120
Monday to Friday
9am to 5pm EST

***If you've purchased from a retailer and you wish to return the product, please contact the retailer directly.**

IMPORTANT : Please read this manual carefully before beginning assembly of this product. Keep this manual for future reference.

Safety Information

This furniture is designed for indoor use.

Identify all the parts and hardware. Do not discard of the packaging until you have checked that you have all the parts and hardware required. Hardware package may have spare parts.

WARNING: This item contains small parts which can be swallowed by children and pets. Keep children and pets away during assembly. To avoid danger of suffocation, always keep plastic bags away from children and pets. We recommend that you assemble this unit on a carpeted floor to avoid scratches. If using power tools, set the tool to low torque to avoid damage.

May require 2 people for ease of assembly.

Care & Maintenance

To clean, use a soft or slightly damp cloth, then wipe with a clean, drycloth. Dust with a soft dry cloth.
Do not use ammonia-based cleaning products, as they will damage the finish.
Do not leave liquids or damp cloths on this furniture.
To avoid dulling of the finish, do not place this furniture in direct sunlight.
Please inspect and tighten all screws or bolts on a regular basis to ensure proper performance and safety of your item.

Pre-Assembly Information

Part Description

SG-A

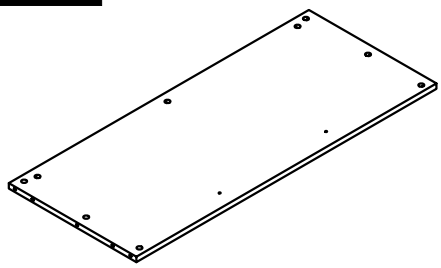

BOTTOM PANEL
QTY 1

SG-B

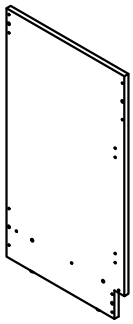

RIGHT SIDE PANEL
QTY 1

SG-C

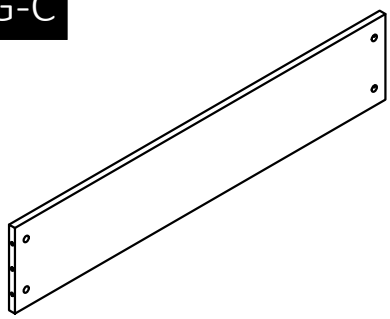

BACK BOTTOM PANEL
QTY 1

SG-D

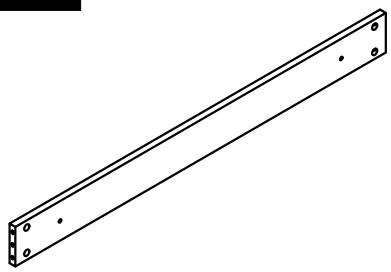

BACK TOP PANEL
QTY 1

SG-E

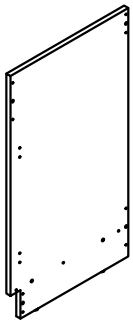

LEFT SIDE PANEL
QTY 1

SG-F

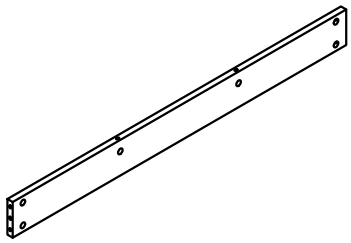

FRONT BOTTOM PANEL
QTY 1

SG-G

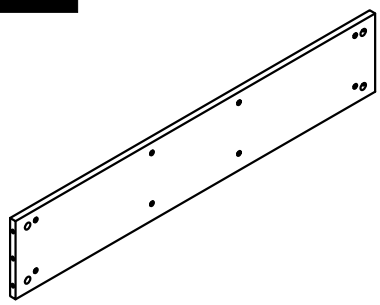

FRONT TOP PANEL
QTY 1

SG-H

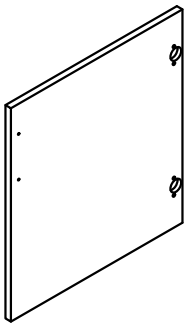

LEFT DOOR
QTY 1

SG-I

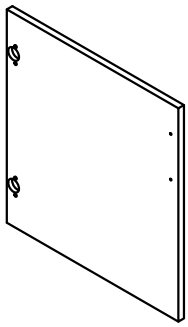

RIGHT DOOR
QTY 1

SG-J

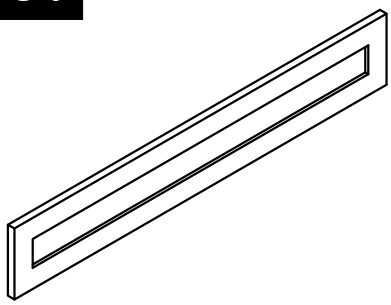

FRONT PANEL
QTY 1

SG-K

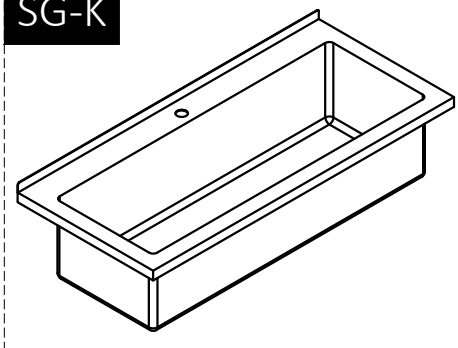

SS SINK
QTY 1

Pre-Assembly Information

Drain Parts

SG-L

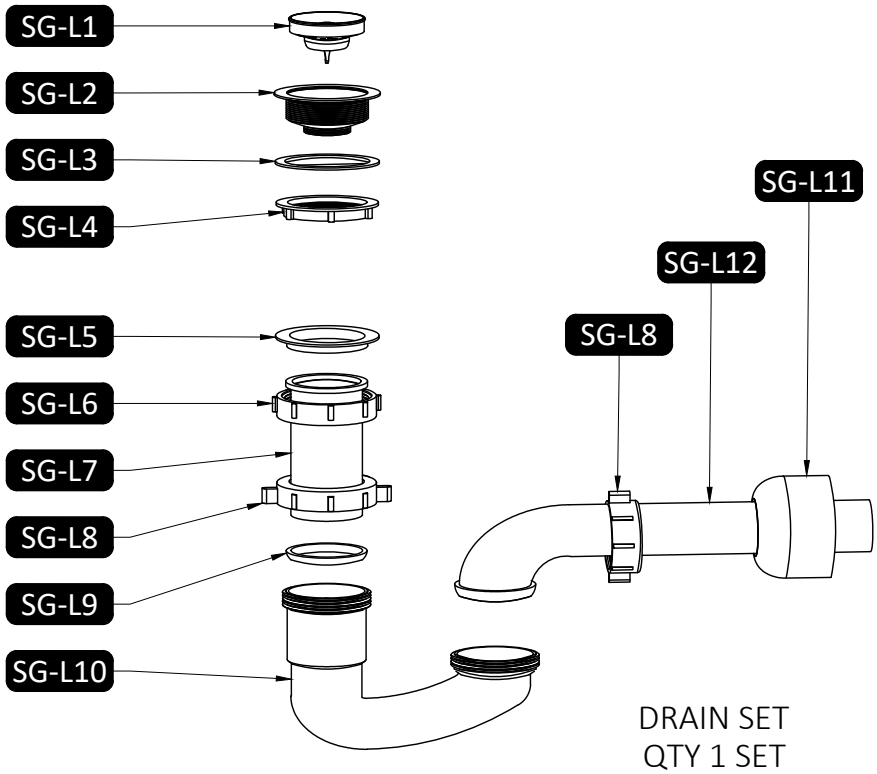

DRAIN SET
QTY 1 SET

SG-L1

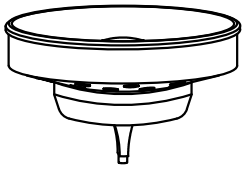

DRAIN PLUG ASSEMBLY
QTY 1

SG-L2

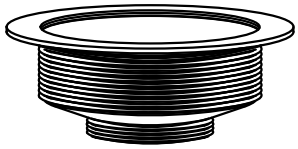

DRAIN BOWL ASSEMBLY
QTY 1

SG-L3

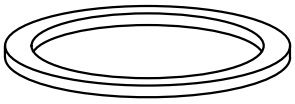

DRAIN WASHER BLACK
QTY 1

SG-L4

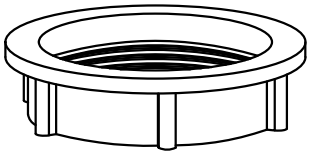

THREAD WASHER
QTY 1

SG-L5

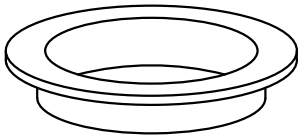

PIPE WASHER
QTY 1

SG-L6

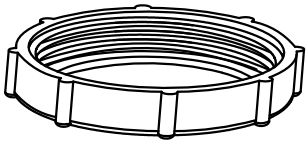

COUPLING BLACK
QTY 1

SG-L7

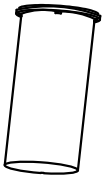

STRAIGHT DRAIN PIPE BLACK
QTY 1

SG-L8

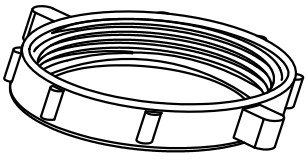

COUPLING BLACK
QTY 2

SG-L9

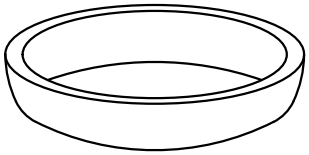

PIPE WASHER WHITE
QTY 1

SG-L10

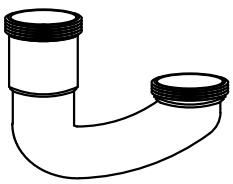

DRAIN CHANNEL BLACK
QTY 1

SG-L11

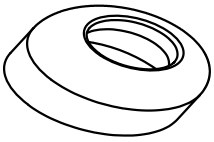

PIPE COVER BLACK
QTY 1

SG-L12

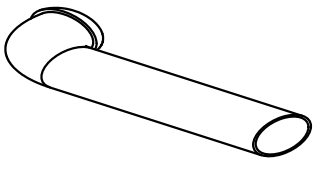

OUTER DRAIN CHANNEL
QTY 1

Pre-Assembly Information

Faucet Parts

SG-M

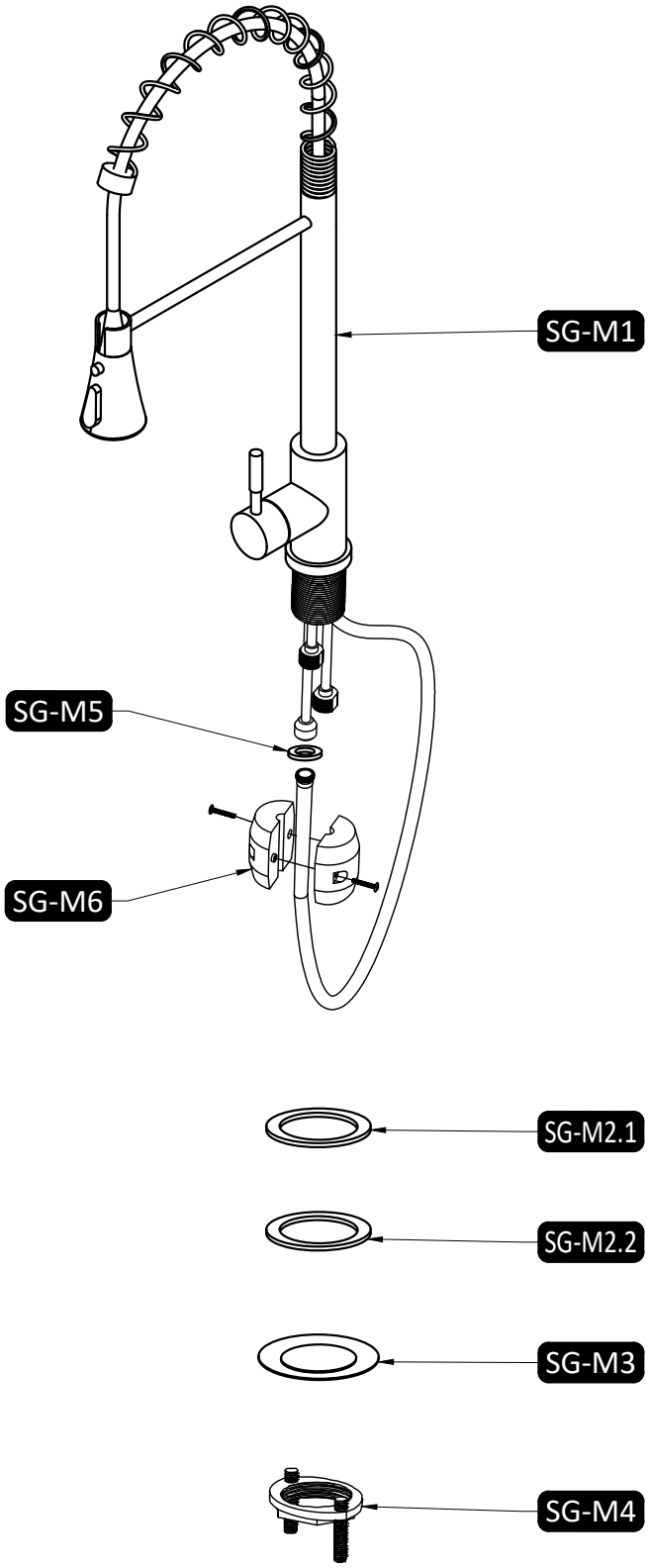

FAUCET SET
QTY 1 SET

SG-M1

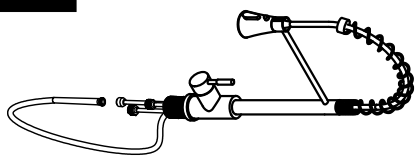

FAUCET BODY
QTY 1

SG-M2

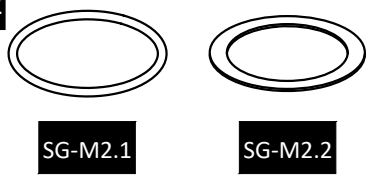

FAUCET WASHER RUBBER
QTY 2

SG-M3

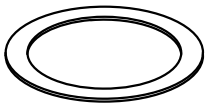

FAUCET WASHER STEEL
QTY 1

SG-M4

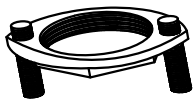

FAUCET WASHER STEEL
QTY 1

SG-M5

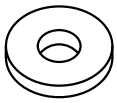

FAUCET SEALING RING
QTY 1

SG-M6



WEIGHT BLOCK
QTY 1

Pre-Assembly Information

Hardware Parts

1

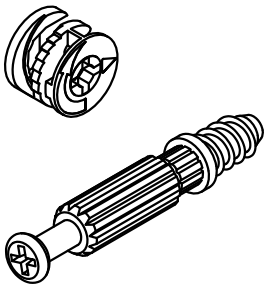

CAM LOCK and CAM PIN
QTY 27 SETS

2

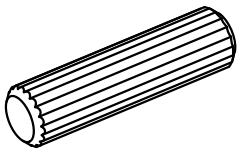

WOOD DOWEL
Ø8 x 30
QTY 14

3

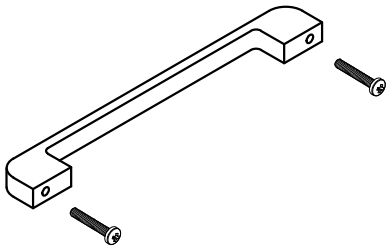

HANDLE and PHILLIPS BOLT
M4 x 23
QTY 2 SETS

4

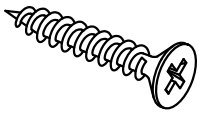

PHILLIPS SCREW
Ø4 x 25
QTY 8

5

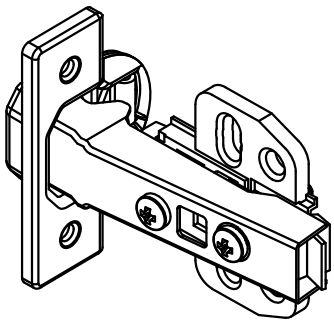

FULL OVERLAY HINGE - Ø35
(Soft-Close Hinge)
QTY 4

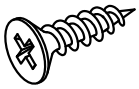

PHILLIPS SCREW
Ø4 x 14
QTY 24

6

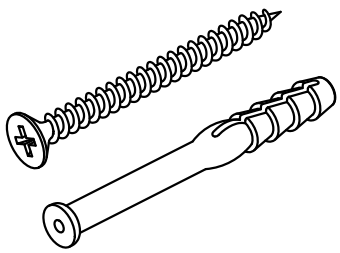

WALL ANCHOR and SCREW
Ø6 x 60
QTY 2 SETS

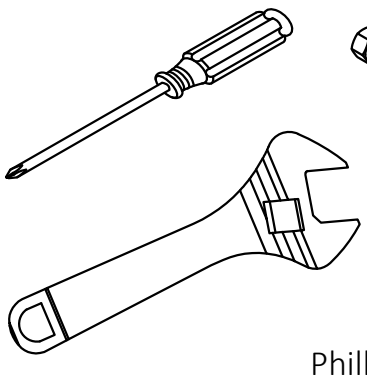

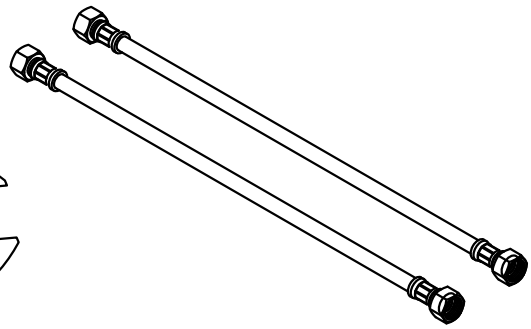

Required -
Phillips screwdriver
Adjustable Wrench
Water supply hoses
Not Included

Components - Key Diagram

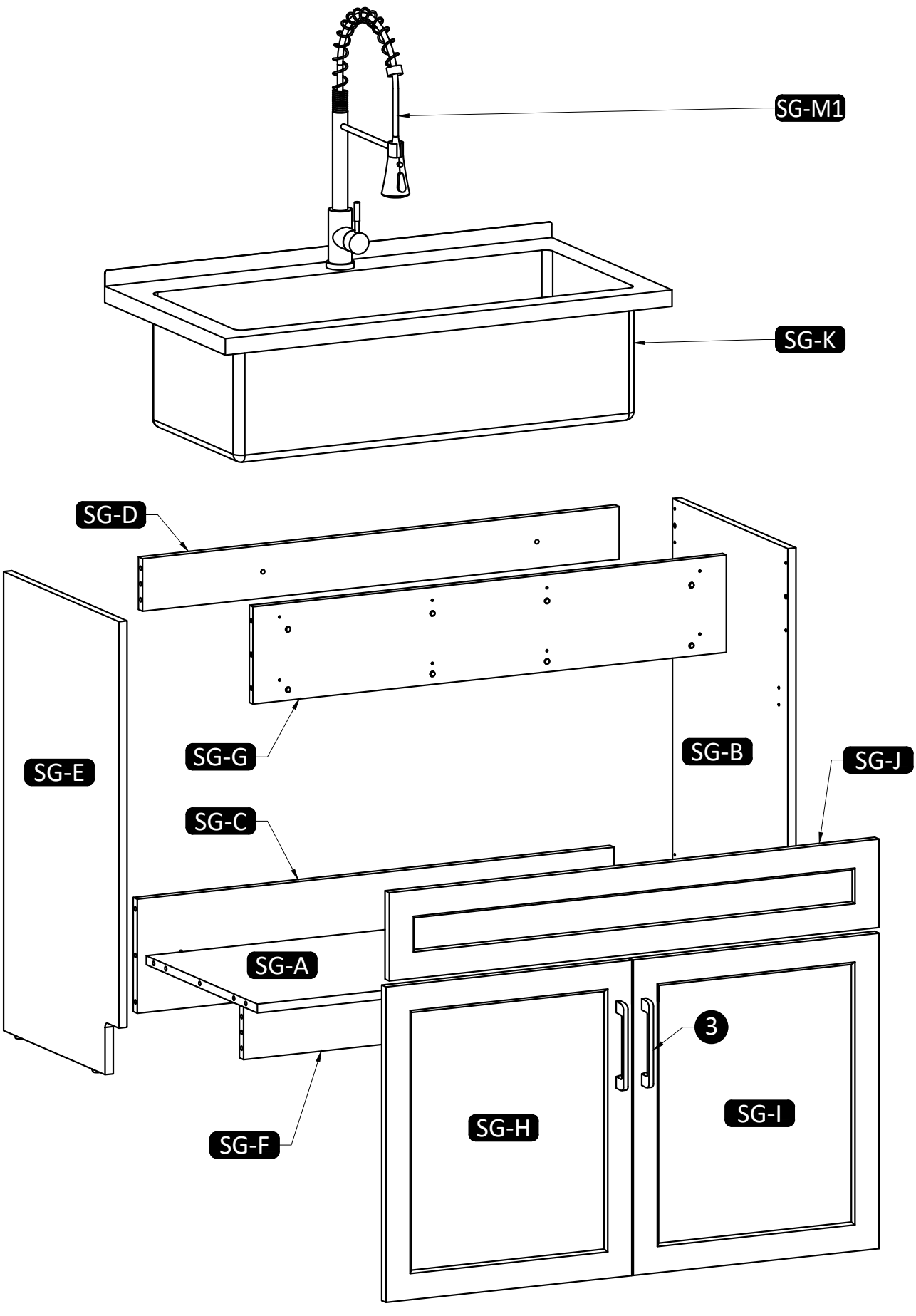

Assembly

Step 1

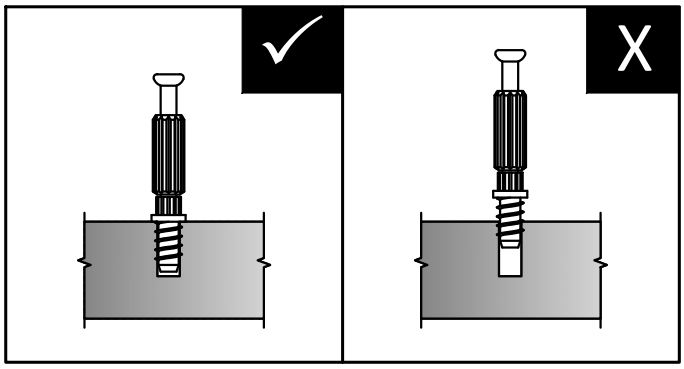

1. Screw Cam Pins (1) into the pre-drilled small holes on Left Panel [SG-E] and Right Panel [SG-B].

Assembly

Step 2

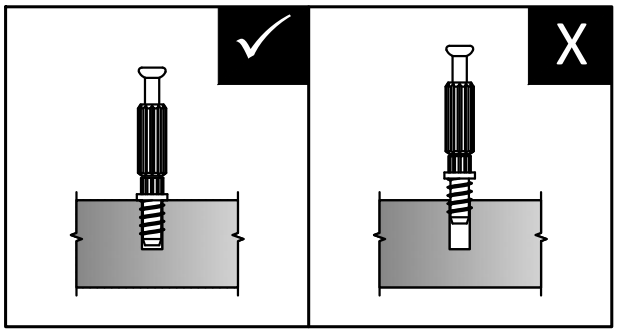

1. Screw Cam Pins (1) into the pre-drilled small holes on Bottom Panel [SG-A], and Back Bottom Panel [SG-C].

Assembly

Step 3

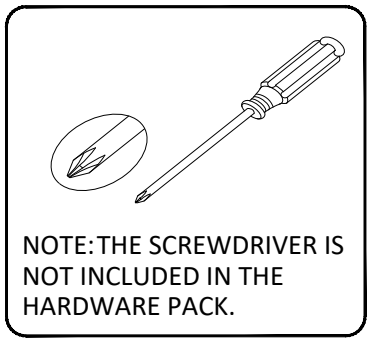

NOTE: THE SCREWDRIVER IS NOT INCLUDED IN THE HARDWARE PACK.

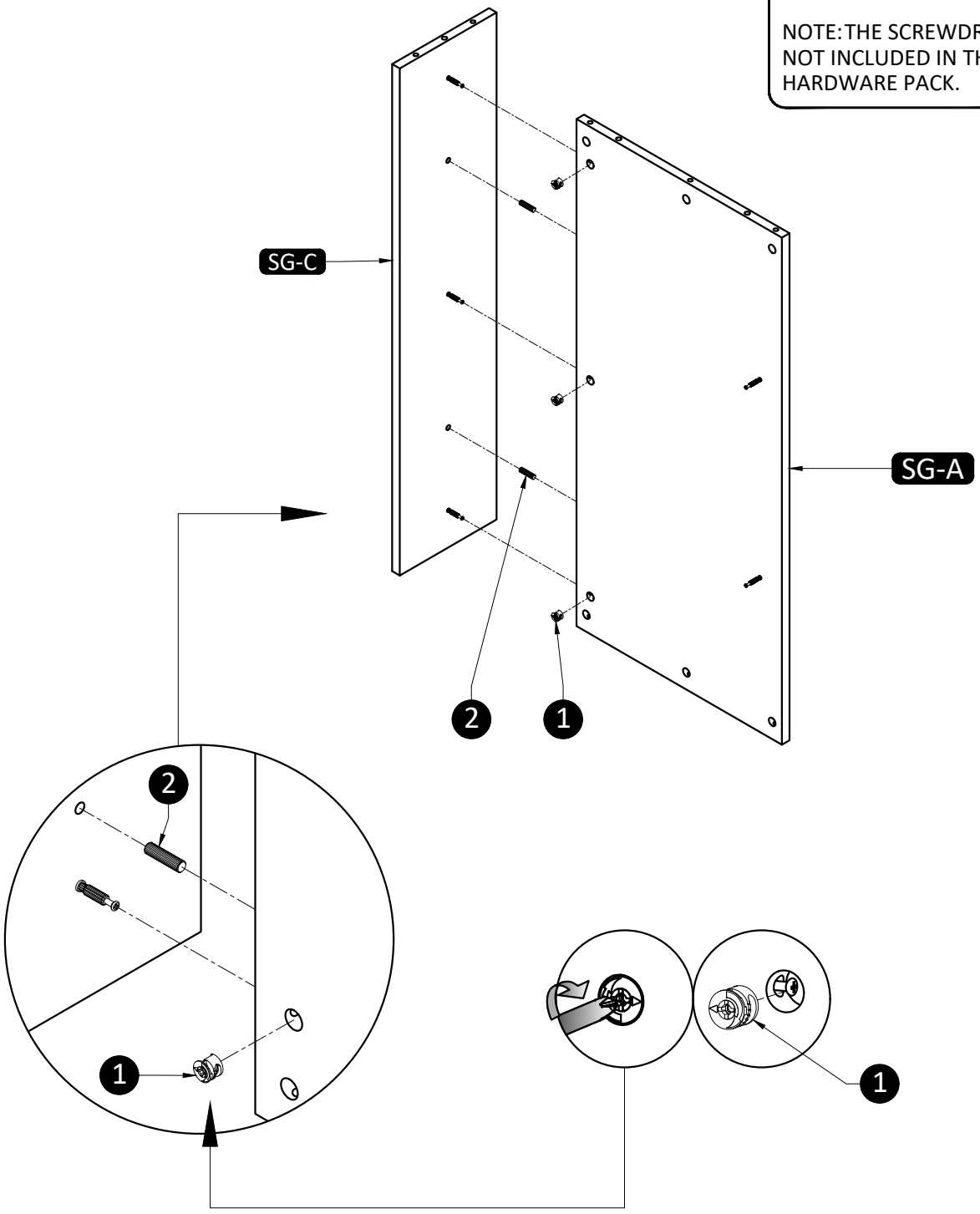

1. Insert Wood Dowels (2) into the pre-drilled hole of Bottom Panel [SG-A].
2. Attach Bottom Panel [SG-A] to Back Bottom Panel [SG-C].
3. Insert Cam Locks (1) into the pre-drilled holes of Bottom Panel [SG-A].
4. Tighten with the Screwdriver.

Assembly

Step 4

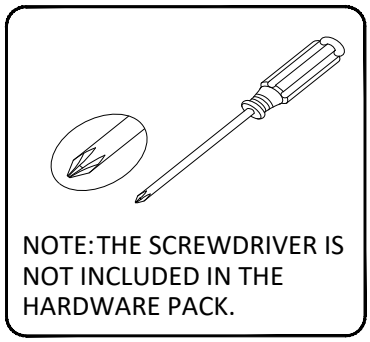

NOTE: THE SCREWDRIVER IS NOT INCLUDED IN THE HARDWARE PACK.

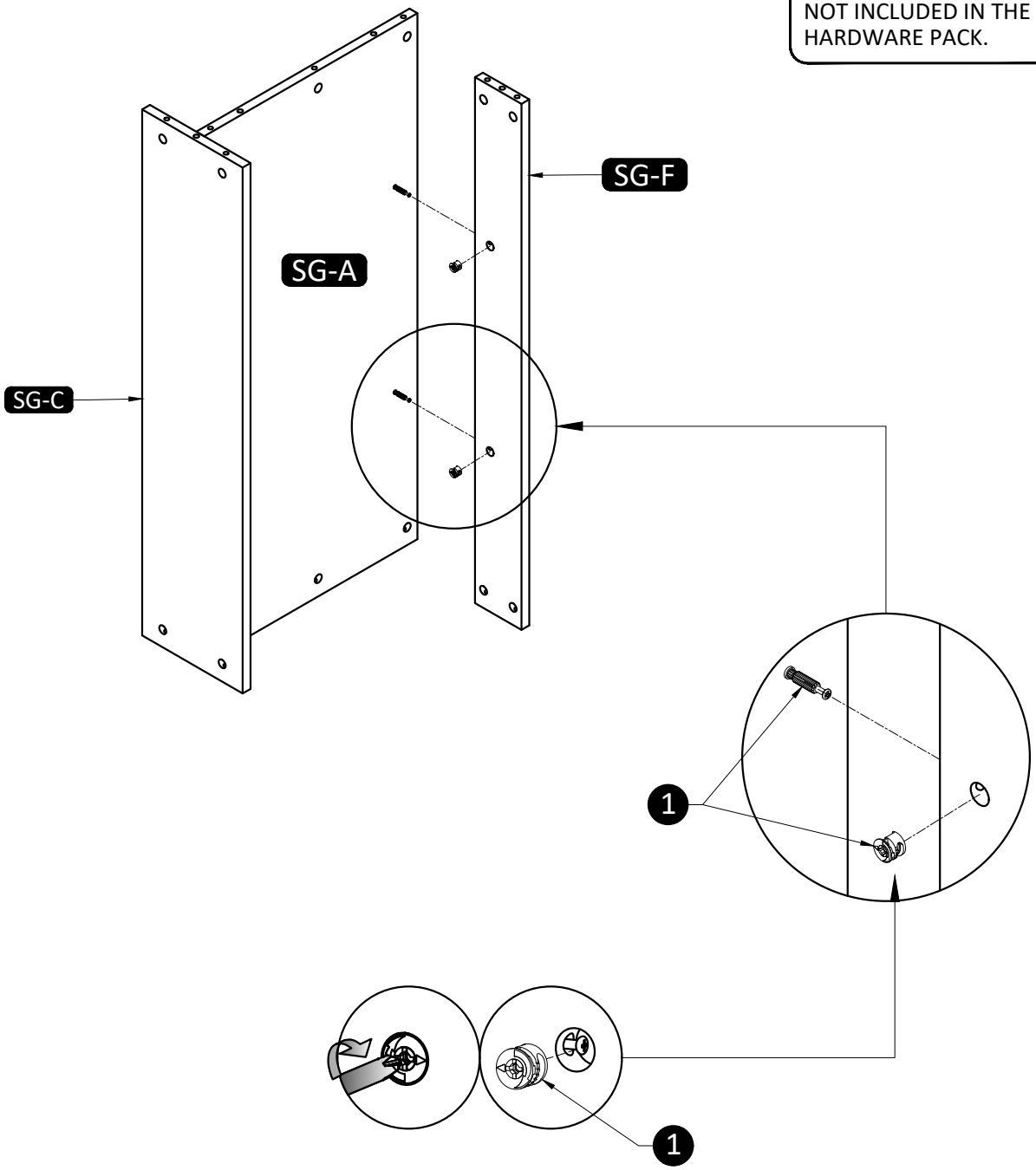

1. Attach Front Bottom Panel (SG-F) to Bottom Panel (SG-A).
2. Insert Cam Locks (1) into the pre-drilled holes of Front Bottom Panel (SG-F).
3. Tighten with the Screwdriver.

Assembly

Step 5

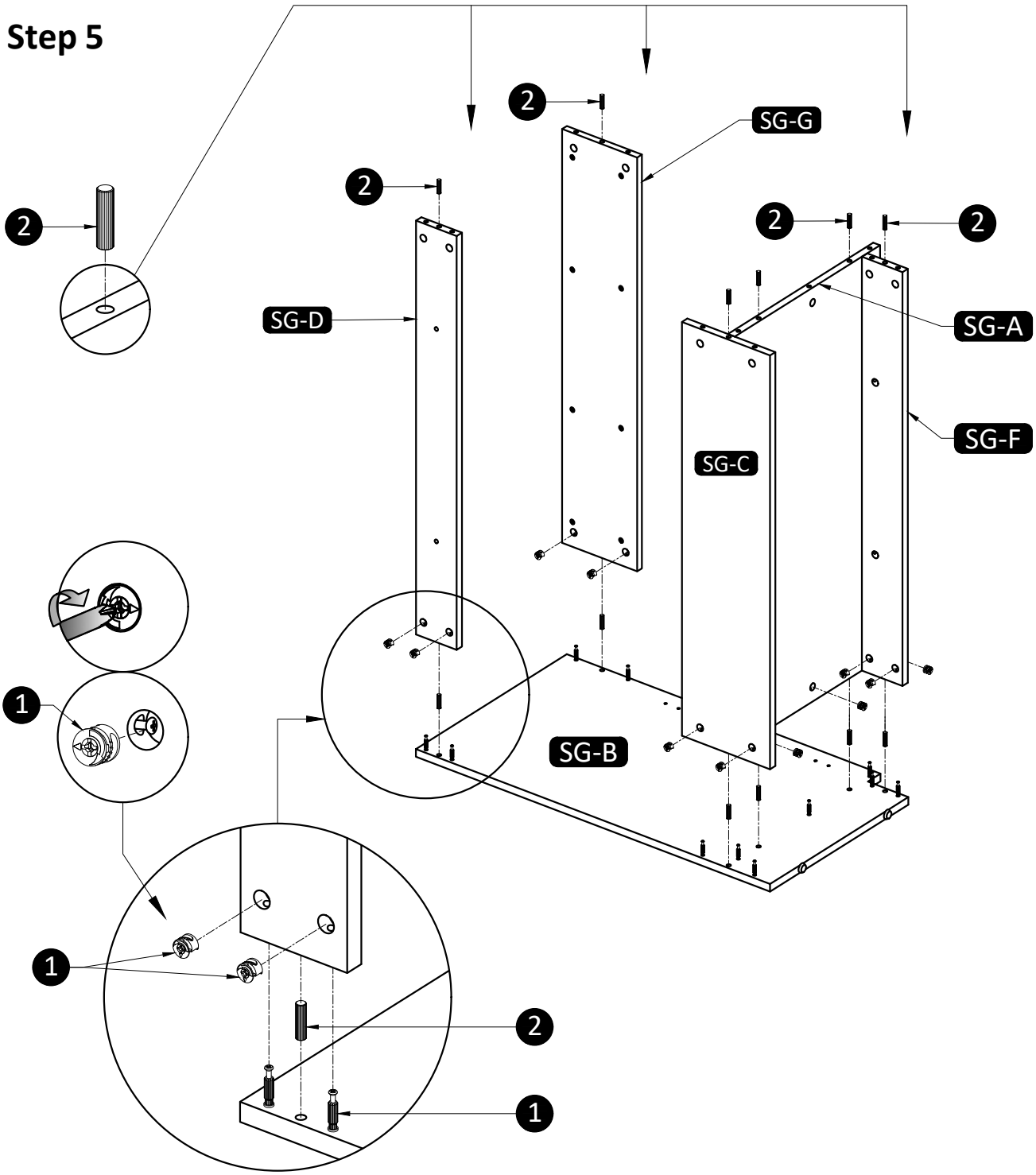

1. Insert Wood Dowels (2) into the pre-drilled hole of Bottom Panel (SG-A), Back Bottom Panel (SG-C), Back Top Panel (SG-D) , Front Top Panel (SG-G), and Front Bottom Panel (SG-F) .
2. Attach Bottom Panel (SG-A), Back Bottom Panel (SG-C), Back Top Panel (SG-D), Front Top Panel (SG-G) and Front Bottom Panel (SG-F) to Right Side Panel (SG-B).
3. Insert Cam Locks (1) into the pre-drilled holes of Bottom Panel (SG-A), Back Bottom Panel (SG-C), Back Top Panel (SG-D), Front Top Panel (SG-G) , and Front Bottom Panel (SG-F).
4. Tighten with the Screwdriver.

Assembly

Step 6

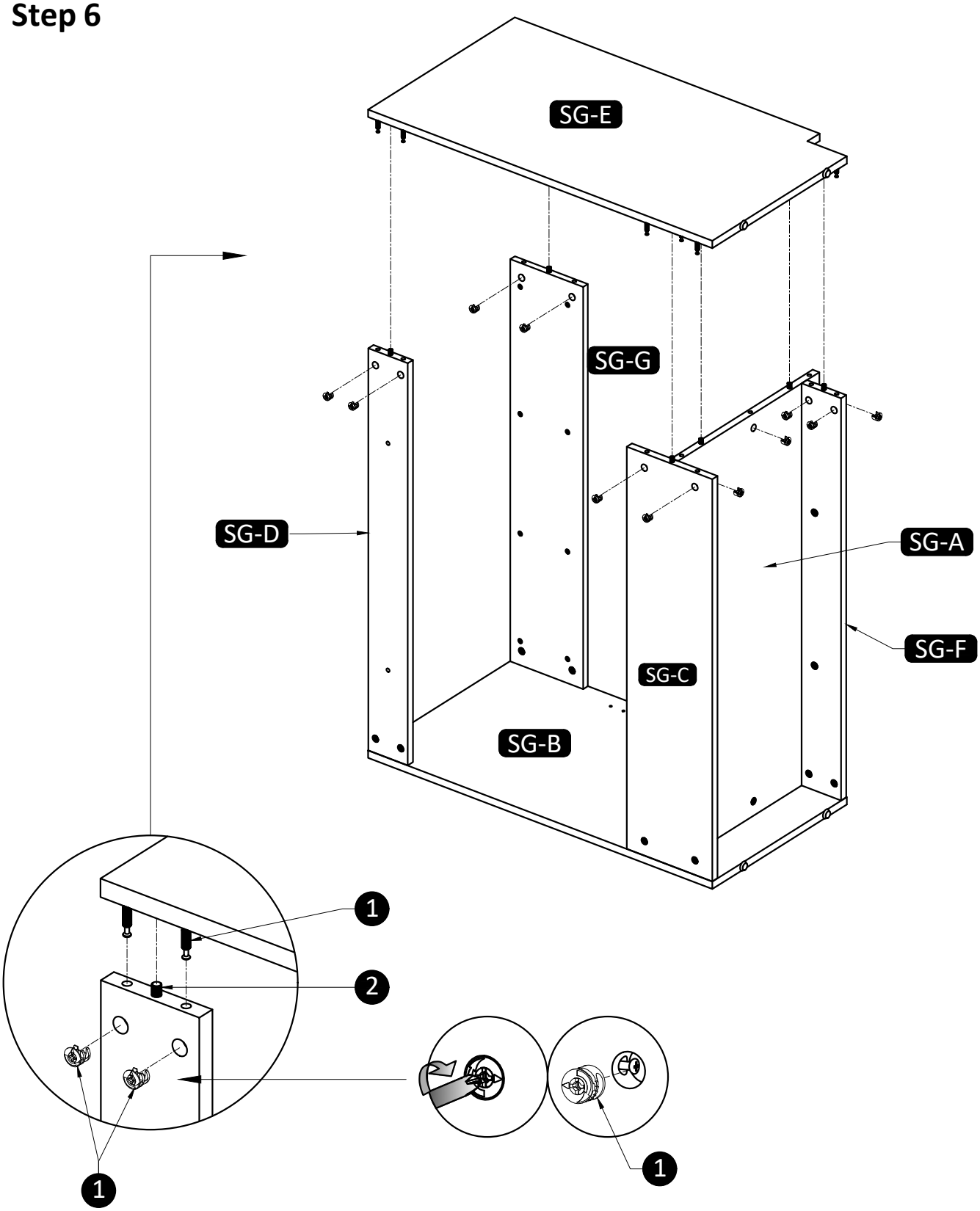

1. Attach the Left Panel SG-E with Cam Pins ① and Dowels into the pre-drilled holes.
2. Insert Cam Locks ① into the pre-drilled hole of Bottom Panel SG-A, Back Bottom Panel SG-C, Back Top Panel SG-D, Front Bottom Panel SG-F and Front Top Panel SG-G.
3. Tighten with the Screwdriver.

Assembly

Step 7

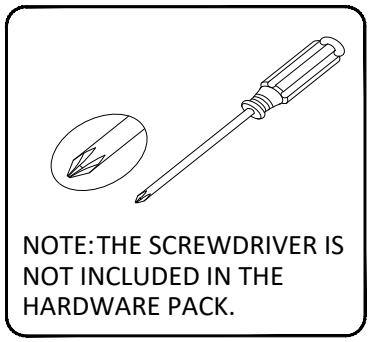

NOTE: THE SCREWDRIVER IS NOT INCLUDED IN THE HARDWARE PACK.

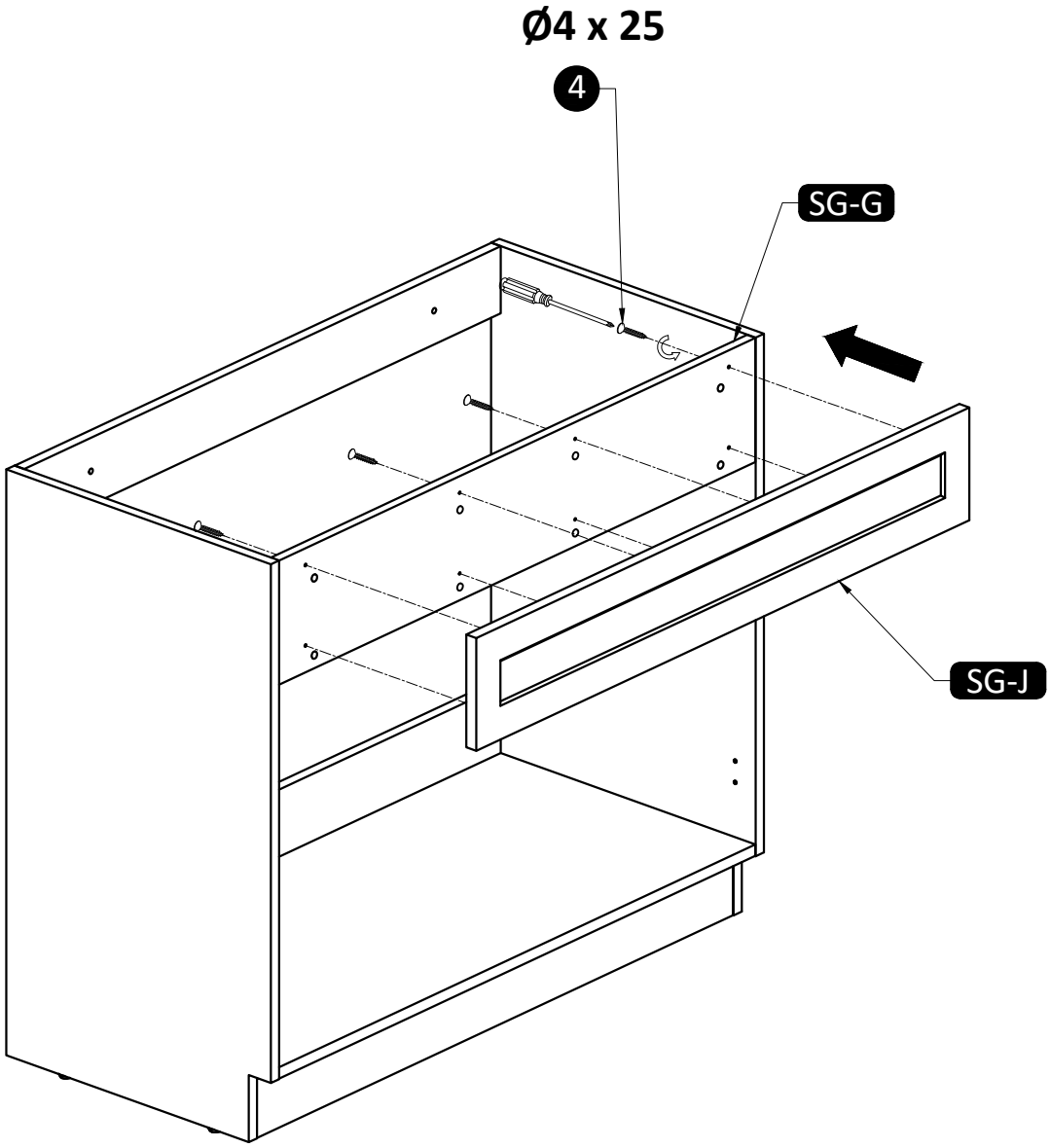

1. Use the Screwdriver to attach the Front Panel (SG-J) to Front Top Panel (SG-G) with Phillips Screws (4) Ø4 x 25.

Assembly

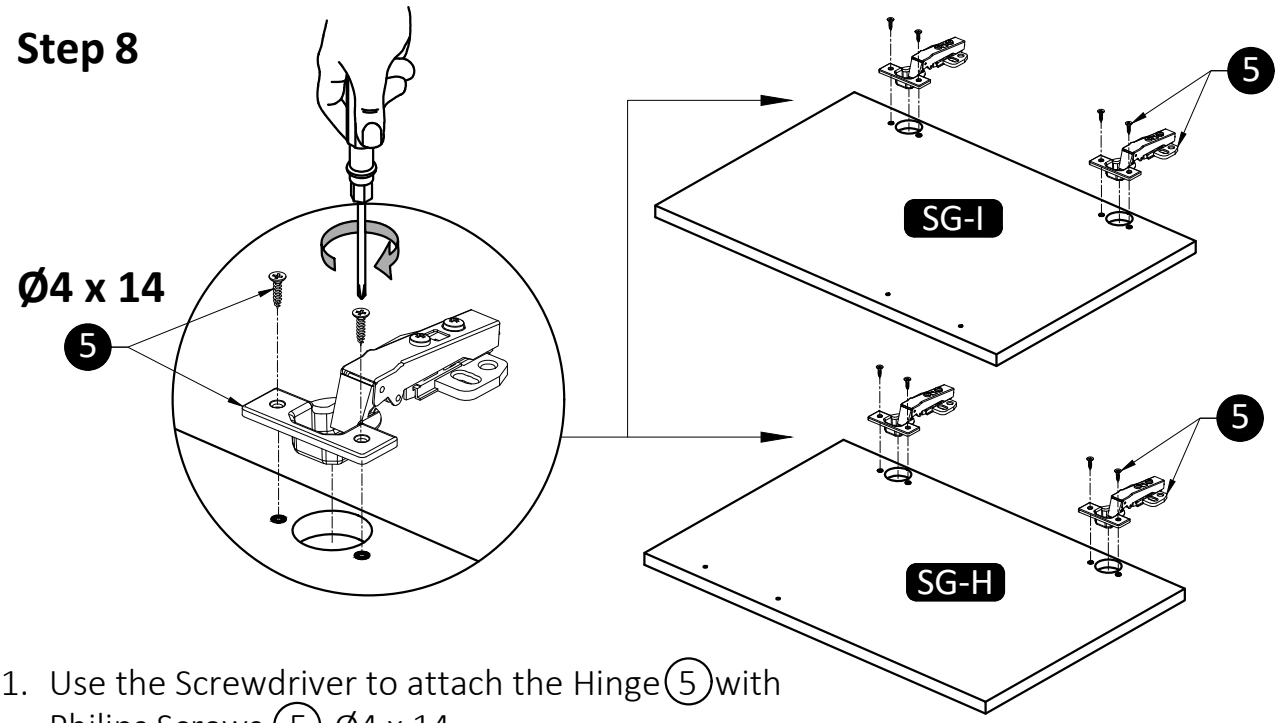

1. Use the Screwdriver to attach the Hinge (5) with Philips Screws (5) Ø4 x 14.

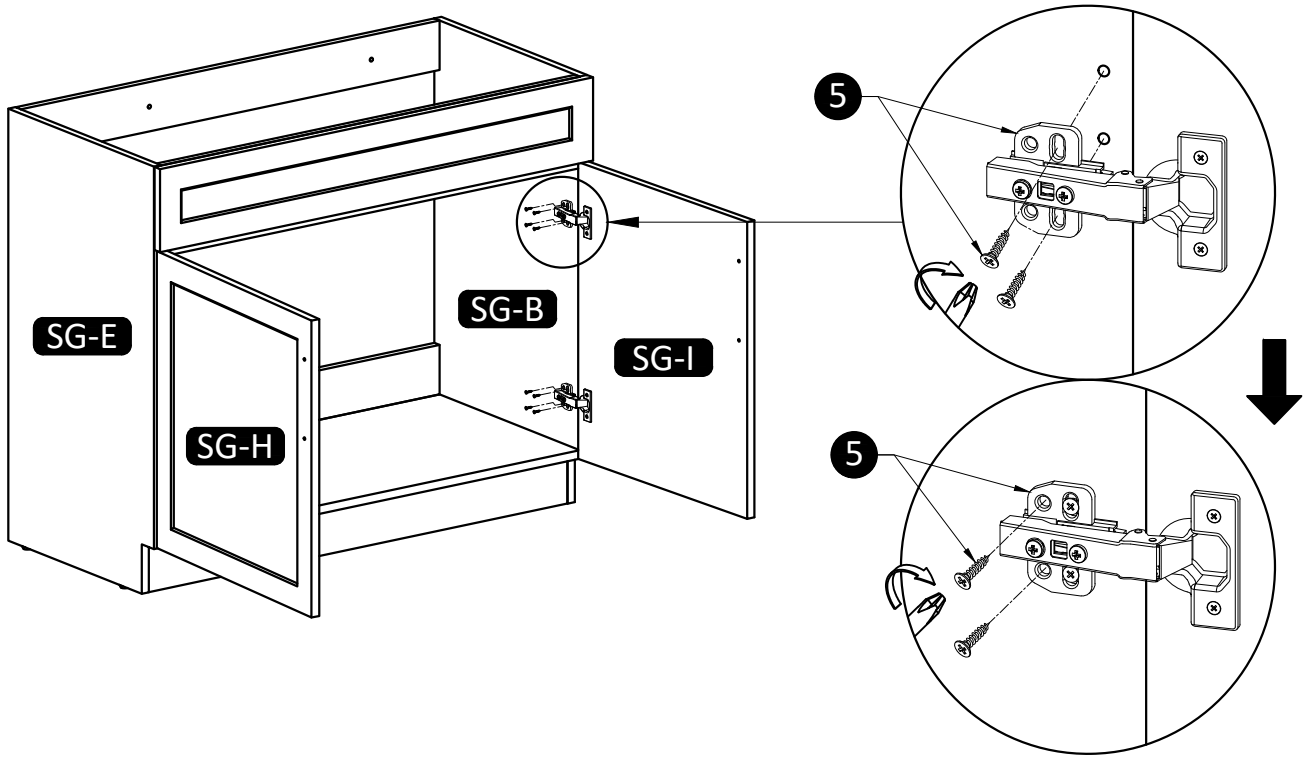

2. Use the Screwdriver to attach the right door hinges to Side (SG-B) with Phillips Screws (5) Ø4 x 14.
3. Use the Screwdriver to attach the left door hinges to Side (SG-F) with Phillips Screws (5) Ø4 x 14.

Assembly

Step 9

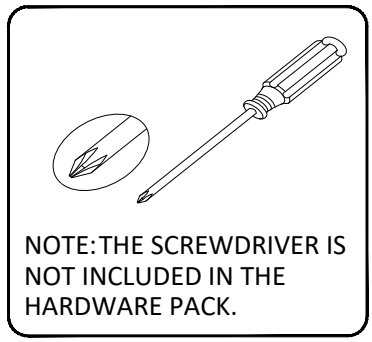

NOTE: THE SCREWDRIVER IS NOT INCLUDED IN THE HARDWARE PACK.

1. Use the Screwdriver to attach the Handle ③ with Philips Bolts ③ M4 x 23.

Assembly

Step 10

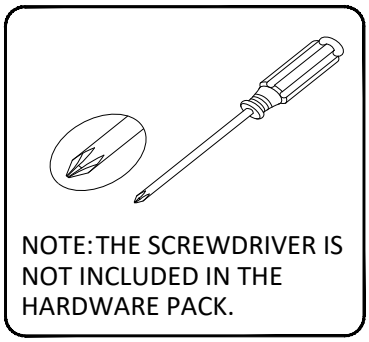

NOTE: THE SCREWDRIVER IS NOT INCLUDED IN THE HARDWARE PACK.

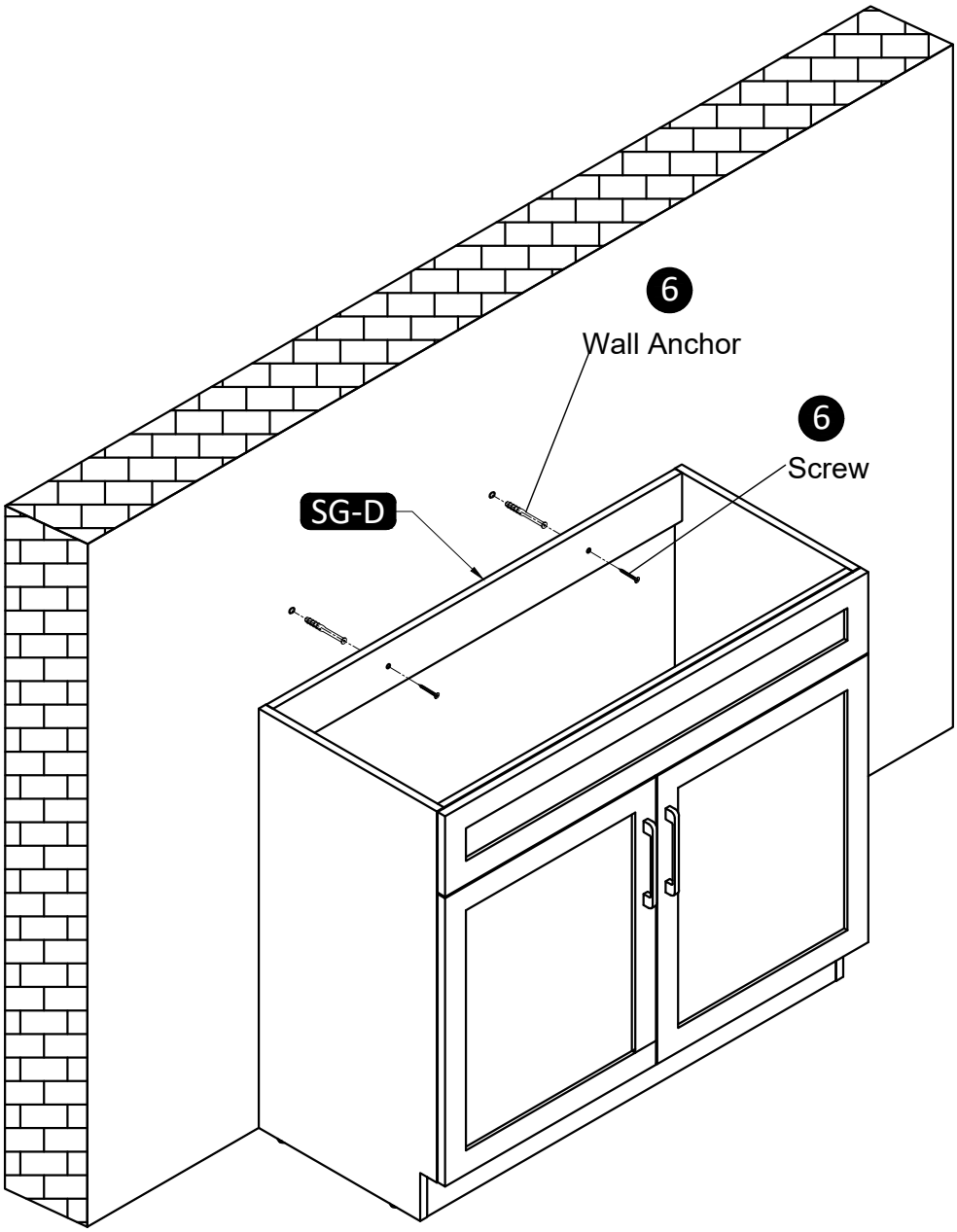

1. Pierce holes in the wall and insert Wall Anchors (6) into the holes.
2. Insert the Screw (6) through panel [SG-D] and then insert into the Wall Anchor to lock in place.

Assembly

Step 11

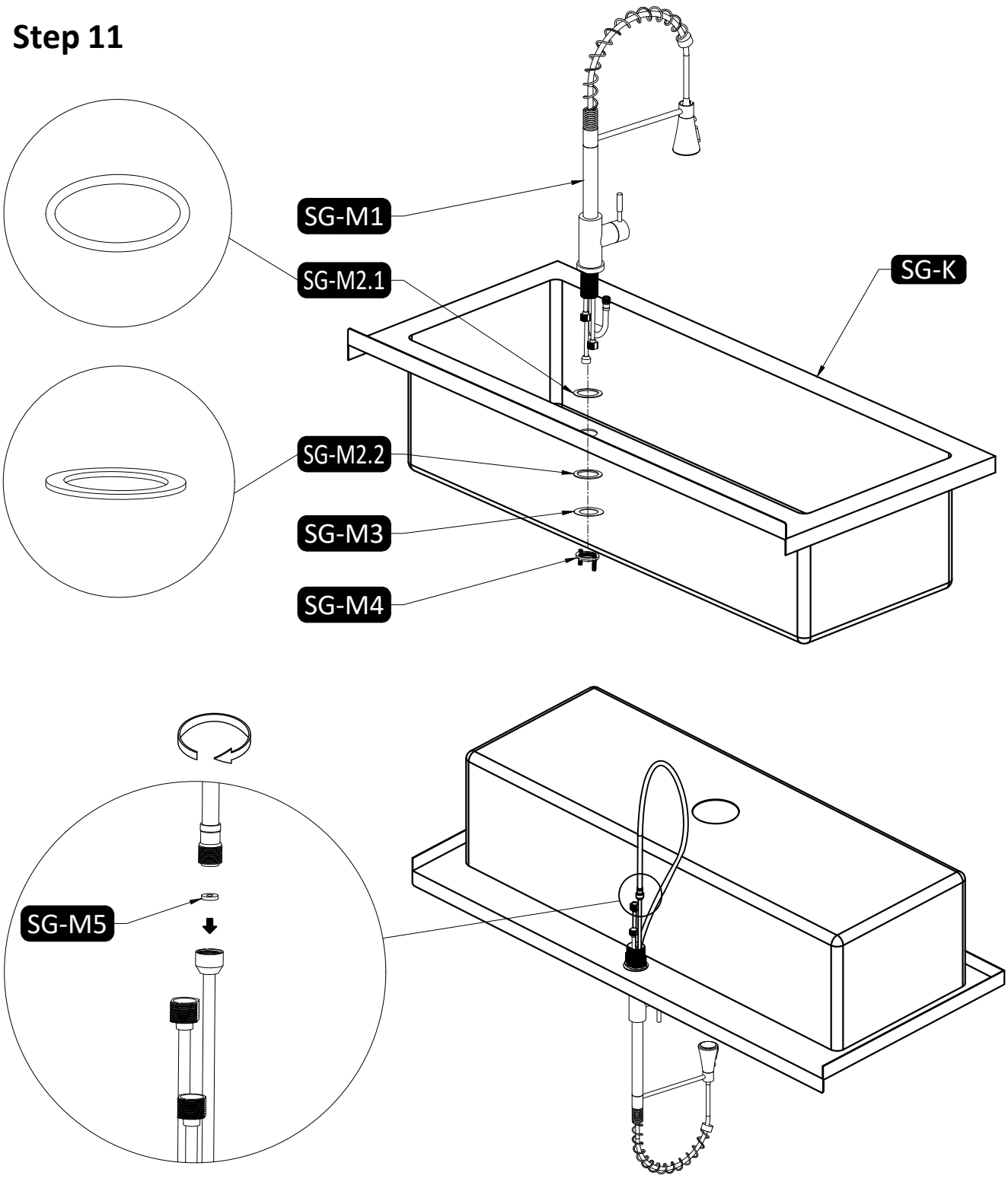

1. Place a Rubber Washer SG-M2 onto the end of the Faucet SG-M1 and insert the faucet through the top of the Sink SG-K .
2. From underneath the Sink SG-K, secure the Faucet SG-M1 to the Sink SG-K using a RubberWasher SG-M2 , Steel Washer SG-M3 and Brass Nut Assembly SG-M4.
3. Insert Faucet Sealing Ring SG-M5 into the hole of pipe and screw hosepipe into.

Assembly

Step 12

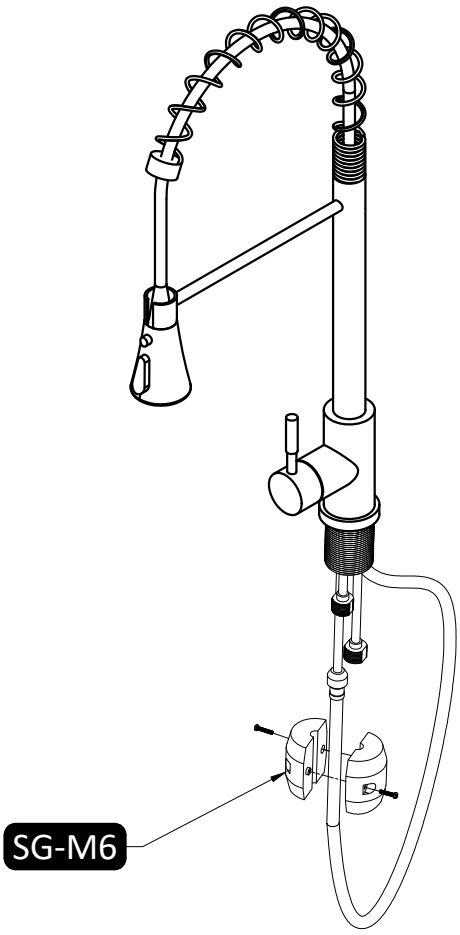

1. Attach the Weight Block SG-M6 to the faucet hose and screw in place to secure.

Assembly

Step 13

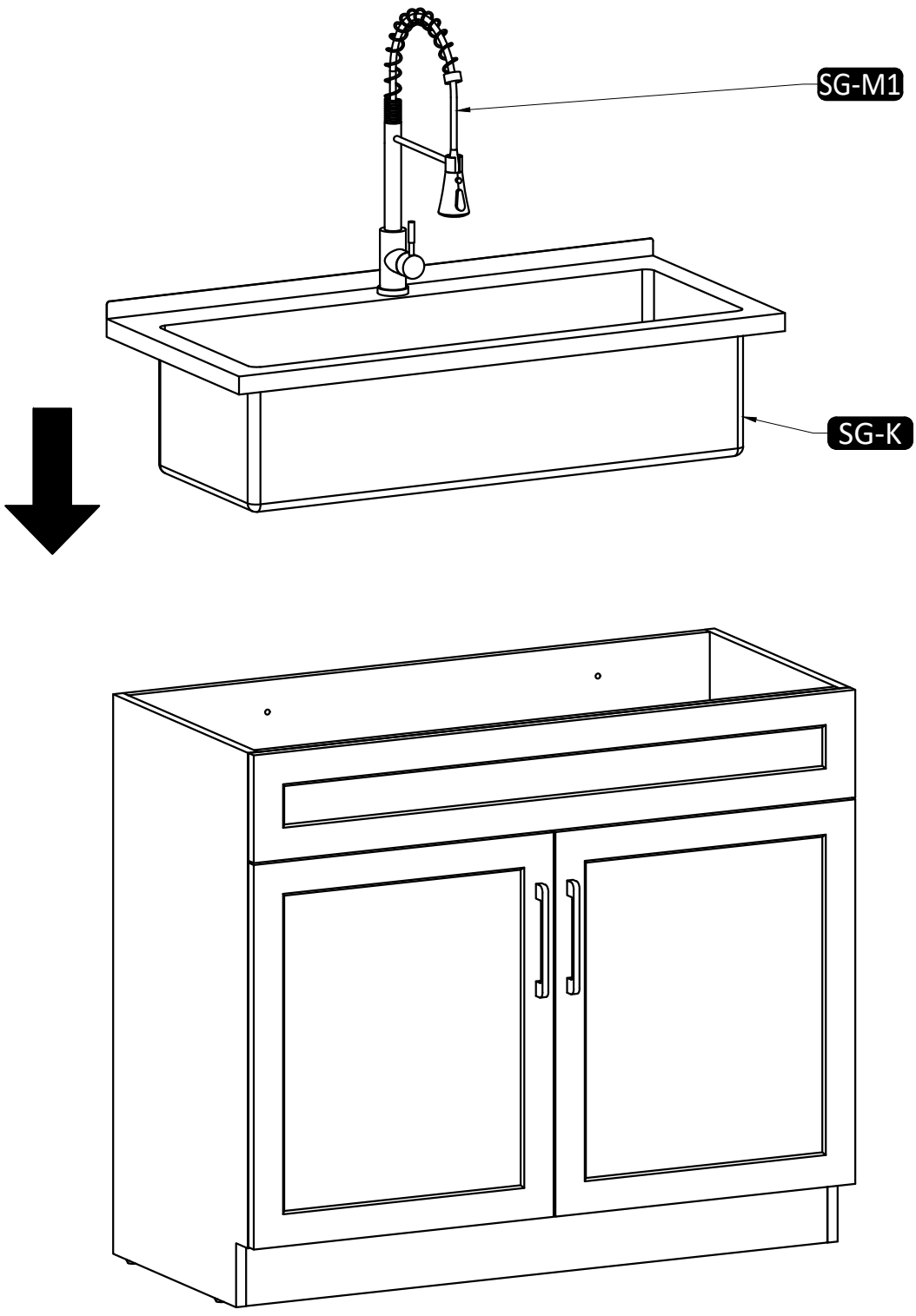

1. Place the Sink (SG-K) with the attached Faucet (SG-M1) on top of the cabinet.

Assembly

Step 14

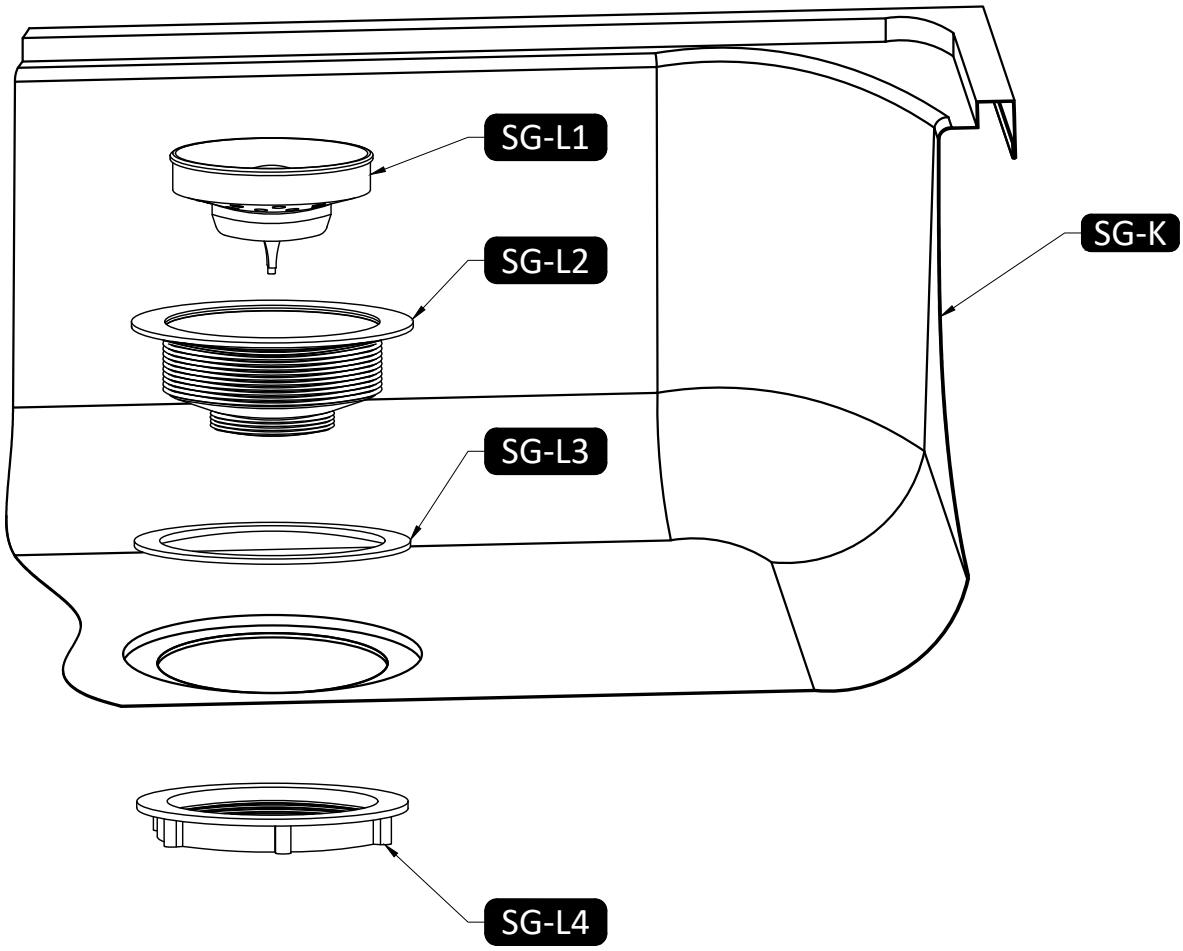

1. Put the Drain Washer (SG-L3) on the top of the drain opening in the Sink (SG-K).
2. Put the Drain Bowl (SG-L2) on the Drain Washer (SG-L3) through the drain opening.
3. From underneath the sink fasten the Threaded Washer (SG-L4) onto the Drain Bowl (SG-L2) and tighten.
4. Insert the Drain Plug (SG-L1) into the Drain Bowl (SG-L2).

Assembly

Step 15

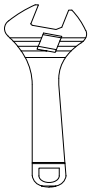

NOTE:THE ADJUSTABLE WRENCH IS NOT INCLUDED IN THE HARDWARE PACK.

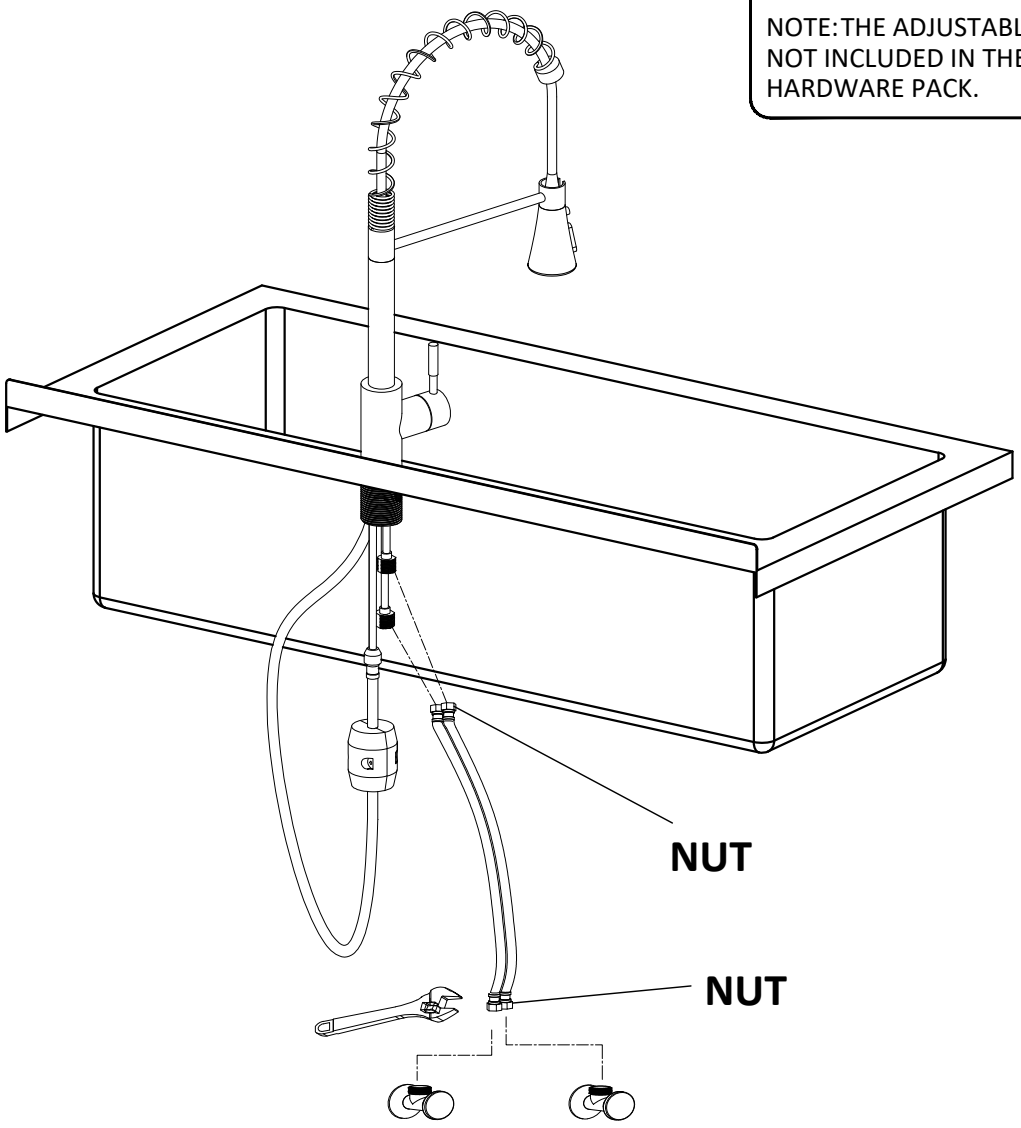

1. Fasten the nuts of the hoses (not included in package) to the nut ends of the faucet body.
2. Fasten the nuts of the hoses (not included in package) to the water outlet:
   - Red striped hose to Hot water supply
   - Blue striped hose to Cold water supply
3. Ensure to only tighten the nut and not twist the supply hose.
4. Leakage may occur if hoses are twisted.

Assembly

Step 16

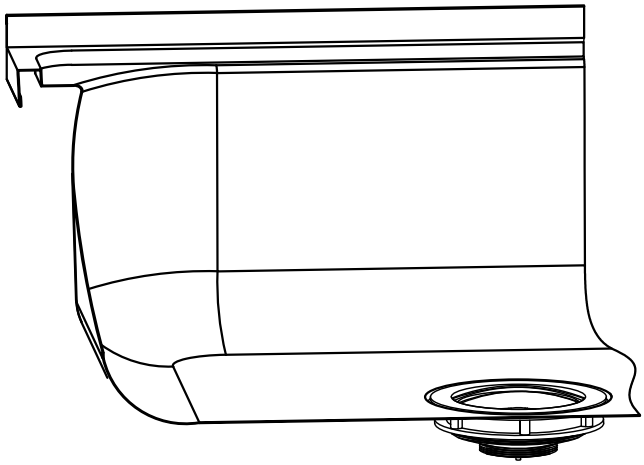

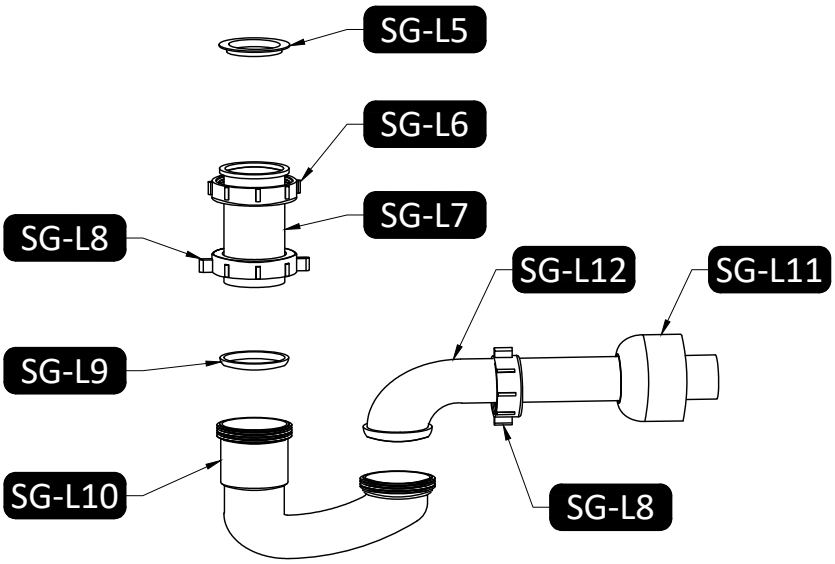

1. Put a Pipe Washer (SG-L5) onto the Straight Drain Pipe (SG-L7).
2. Put the Coupling (SG-L8) into the Straight Drain Pipe (SG-L7) and put a Pipe Washer (SG-L9) into the Straight Drain Pipe (SG-L7).
3. Connect the Drain Channel (SG-L10) to the Straight Drain Pipe (SG-L7) and fasten with the Coupling (SG-L8).
4. On the Drain Channel (SG-L10), wrap teflon tape not included around the threaded end that connects to the Outer Drain Channel (SG-L12).
5. Connect the Outer Drain Channel (SG-L12) to the Drain Channel (SG-L10) and fasten with the Coupling (SG-L8).
6. Insert the Outer Drain Channel (SG-L12) into the Drain Channel (SG-L10) and cover with the Pipe Cover (SG-L11).

Assembly

Step 17

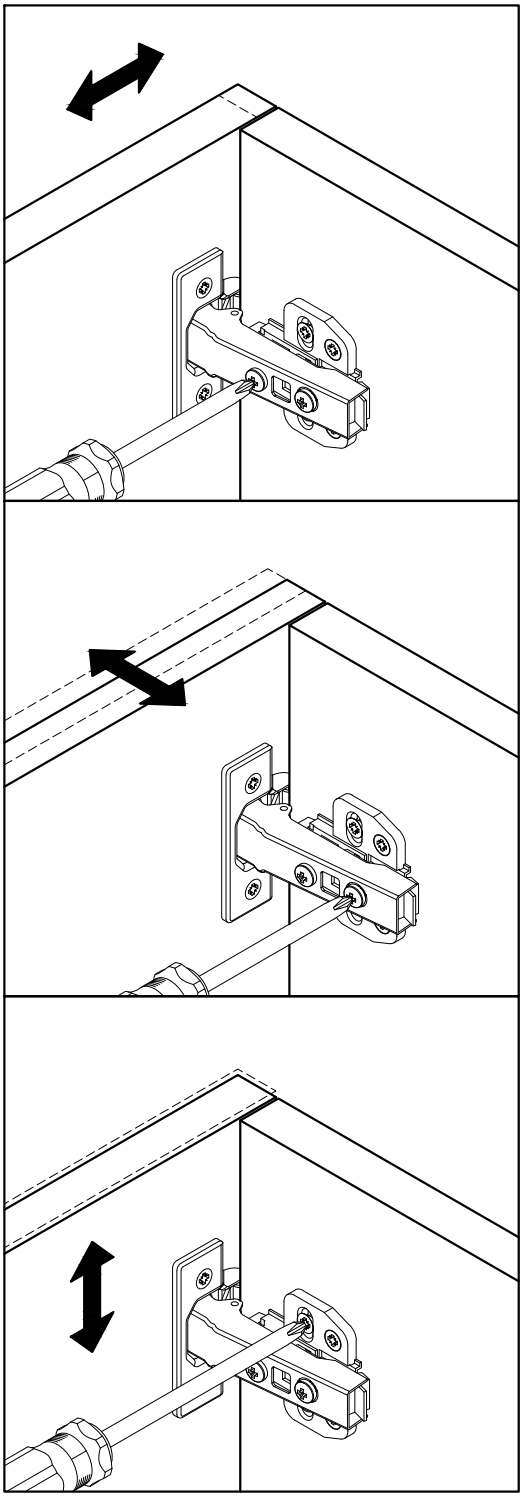

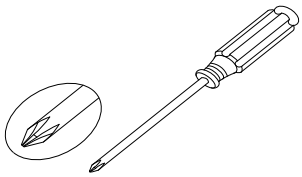

NOTE:THE SCREWDRIVER IS NOT INCLUDED IN THE HARDWARE PACK.

1. Use the Screwdriver to re-align or adjust the hinges that attach the doors to the cabinet.