



Owner's Manual
with Assembly Instructions

Styles and colo(u)rs may vary.
Made in China.

The owner's manual contains important safety information as well as assembly, use and maintenance instructions.
The Ride-on Car must be assembled by an adult who has read and understands the instructions in this manual.
Keep the package away from children and dispose of properly before use.
Keep this manual for future reference.

On the purchase of your new Ride-On.

This ride-on will provide your child with many miles of riding enjoyment. To help ensure a safe ride we ask you to please read this manual carefully, and keep it for future reference.

Please follow the recommendations in this manual, they are designed to improve the safety and operation of your ride-on car and it's rider.

HZB-1528 Children Battery Powered Ride-On manufactured by Chizhou Haizhibao Children Products Co., Ltd. (Add: Matang Industrial Zone, qingyang County,Chizhou City, Anhui Province, P.R.China).

SPECIFICATIONS:

Battery	12V4.5AH *2
Charger	24V800mA
Input	Depend on local voltage
Motor	550-12000

Suitable age: over 36 months

Load Capacity: Under 30kg

Speed: 3km/h

Size of ride-on car: 88*57.5*55.5CM

Power way: Charging type

Charge time: 4-6 hours

⚠ WARNING!

- **CHOKING HAZARD** - Small parts. Not suitable for children under 36 months. The product contains small parts, keep children away when assembling.
- **ADULT ASSEMBLY REQUIRED.**
- Always remove protective material and poly bags and dispose before assembly.
- Protective equipment should be worn. Always wear shoes and sit in the seat when operating the vehicle.
- Only drive on level ground. Never use on the lawn.
- Keep your hands, hair, and clothes away from moving parts.
- Never leave child unattended. Direct adult supervision is required. Always keep child in view when child is in vehicle.
- To reduce the risk of injury, adult supervision is required. Never use in roadways, near motor vehicles, on or near steep inclines or steps, swimming pools or other bodies of water, always wear shoes, and never allow more than 1 rider.
- Never use in unsafe conditions such as snow, rain, loose dirt, mud, sand, or gravel, otherwise may result in an unexpected accident such as tipping over, and could damage the electrical system or battery
- Not to be used in traffic.
- This toy should be used with caution since skill is required to avoid falls or collisions causing injury to the user or third parties.
- This toy is unsuitable for children under 36 months due to its maximum speed; Maximum user weight is 30kg.
- This toy has no brake.

⚠ BATTERY INFORMATION

- Non-rechargeable batteries are not to be recharged.
- Rechargeable batteries are to be removed from the toy before being charged.
- Rechargeable batteries are only to be charged under adult supervision.
- Different types of batteries or new and used batteries are not to be mixed.
- Batteries are to be inserted with the correct polarity.
- Exhausted batteries are to be removed from the toy.
- The supply terminals are not to be short-circuited.

⚠ WARNING!

The remote control is not a toy, and is only allowed to be operated by adults.

Parts Diagram | 3

HINT: Some parts shown are assembled on both sides of vehicle

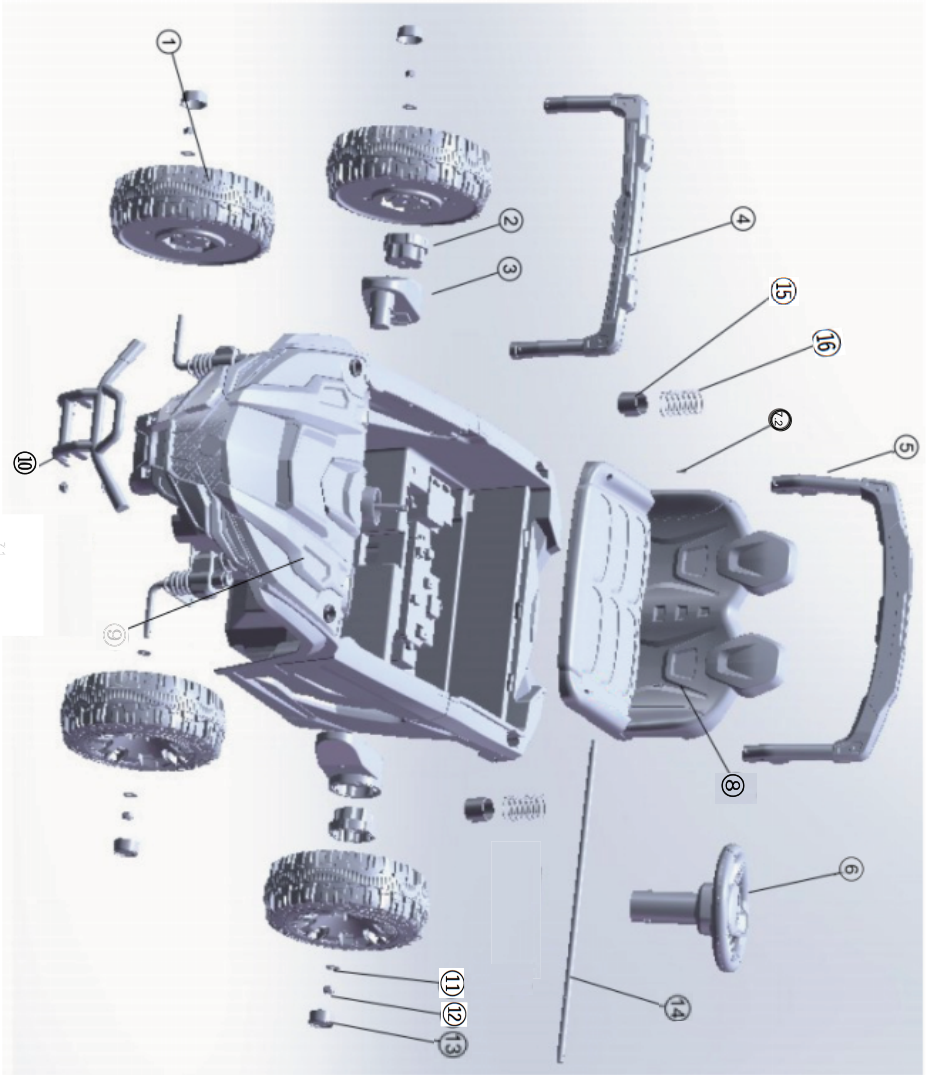



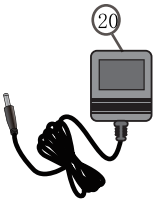



Assembly tools required (not included):



Screwdriver

Parts List | 4

1 Wheels x4 	2 Wheel connecter x2 	3 Motor x2 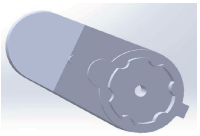
4 Front frame x1 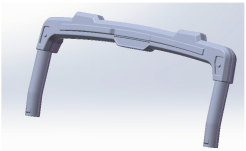	5 Rear frame x1 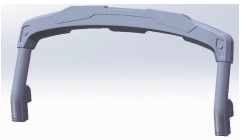	6 Steering wheel x1 
7.1  Ø4*12 screw x3 7.2  Ø4*20 screw x2	8 Seat x1 	9 Vehicle body x1 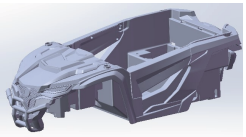
10 Front Bumper x1 	11 Gesket x8 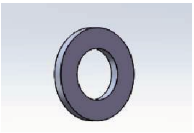	12 M8 nut x4 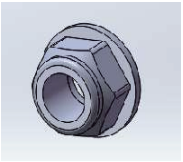
13 Wheel cover x4 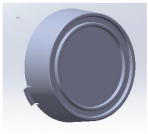	14 Aft shaft x1  Optional: Preinstalled	15 Shock absorber sleeve x2 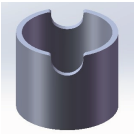 Optional: Preinstalled
16 Spring x2  Optional: Preinstalled		

Front Bottom View

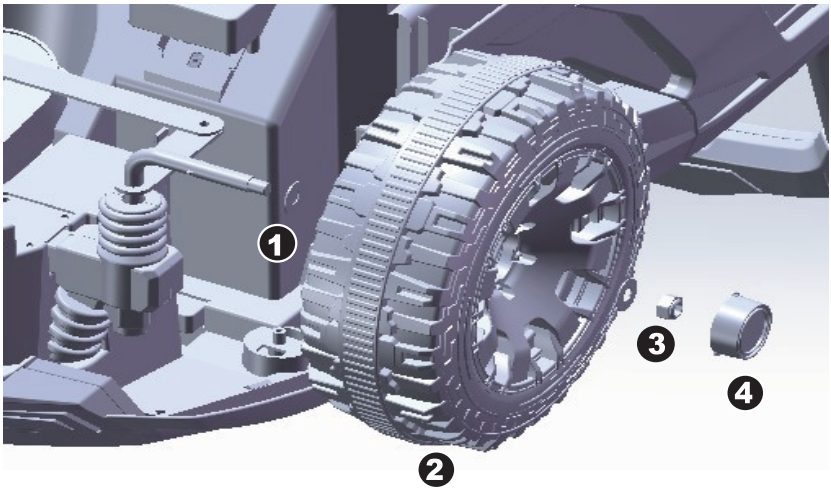

Remove all the parts from the front axle;

1. First insert the gasket into the steering shaft;

2.Insert the front wheel into the steering shaft with the gasket to the steering shaft limit;

3.Insert the gasket into the steering shaft with the M8 nut to tighten and fix;

4.Finally insert the wheel cover into the hub.

5.Repeat the above procedure to assemble the other Front Wheel.

HINT: An extra spanner has been provided to hold the Lock Nut on the other side of therear axle while tightening the Lock Nut on the other side.

Attach the Front Wheels | 6

Optional:the rear axle can be installed by yourself.

Rear Bottom View

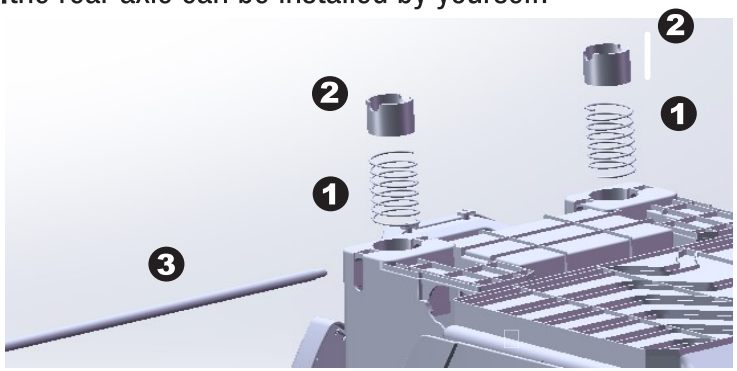

Remove all the parts from the rear axle.

Optional:

1.Firstly, springs are placed in the body;
2.Then the shock absorber sleeves are pressed down the spring;
3.Inserted into the rear axle to fix the shock absorber;

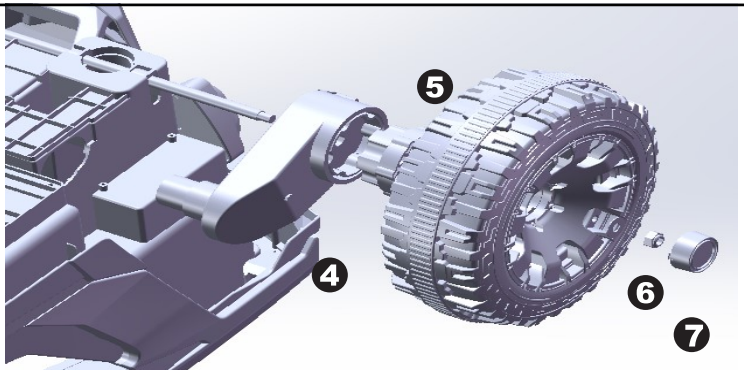

4/1.Motor through the rear axle;

5/2.The rear wheel connectoin after passing through the rear axle into the motor and then put the rear wheel in;

6/3.Use the gasket to cover the rear axle and tighten the M8 nut; DO NOT over tighten;

7/4.The wheel cover stuck into the hub.

8/5.Repeat the above procedure to assemble the other Rear Wheel.

Turn the vehicle body upright.

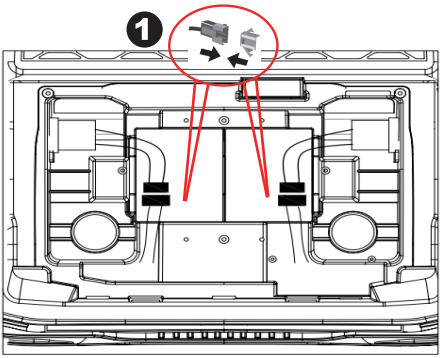

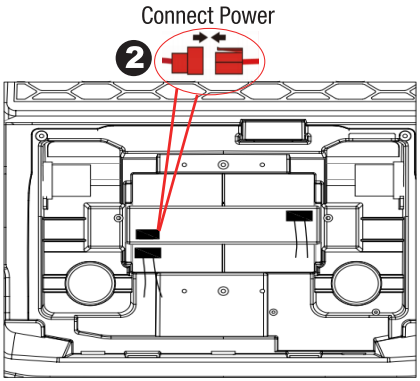

After attach 4 wheels, reverse the vehicle body and then plug into the body socket. Plug the vehicle connector into the connector on the battery.

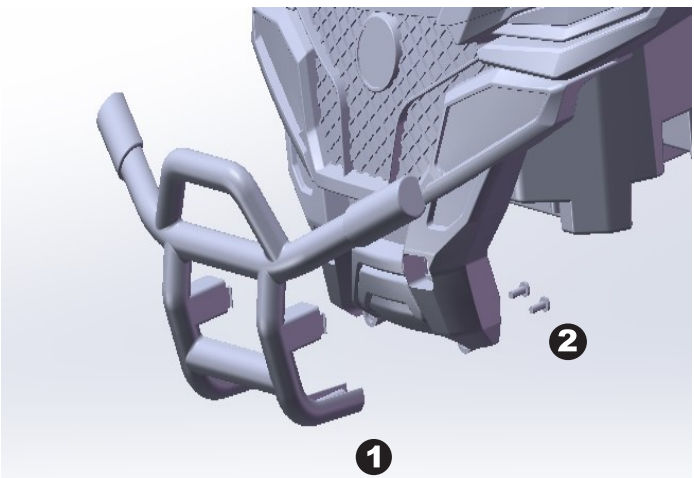

1.Insert the bottom hook into the Front bumper slot.

2.Tigthen the Ø4*12 screws.

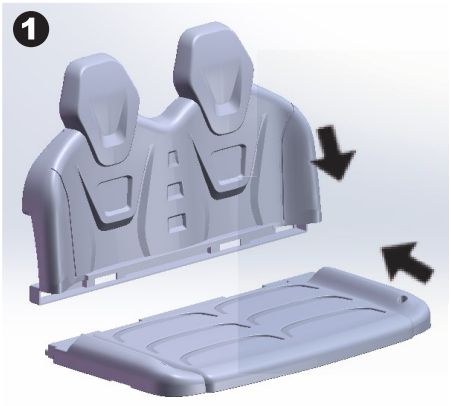

1.Place the bottom clip slot of the backrest into the rear clip hook of the base.

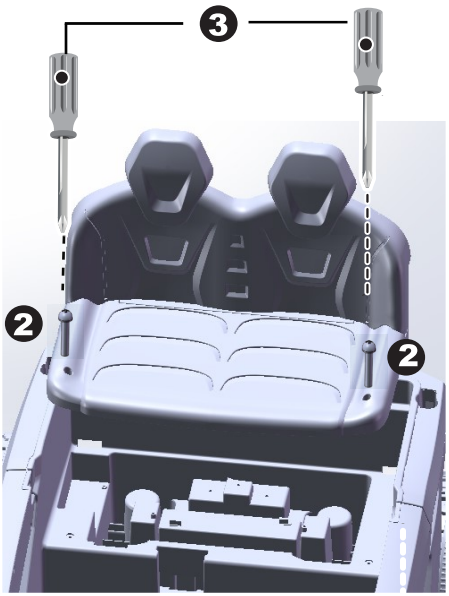

2.Then with a screwdriver tighten the Ø4*20 screws on the top of the seat into the holes in the vehicle.

3.Finally,fix the locking screw.

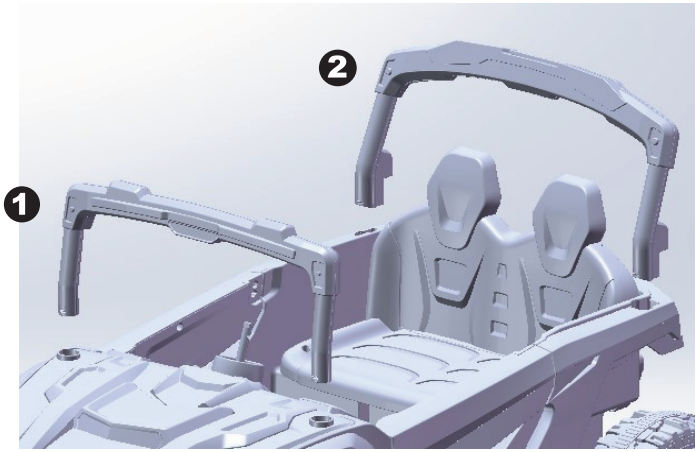

1. Fix the hooks at the bottom of the front frame into the holes on the vehicle;
2. Fix the hooks at the bottom of the rear frame into the holes on the vehicle.

Attach the Steering Wheel

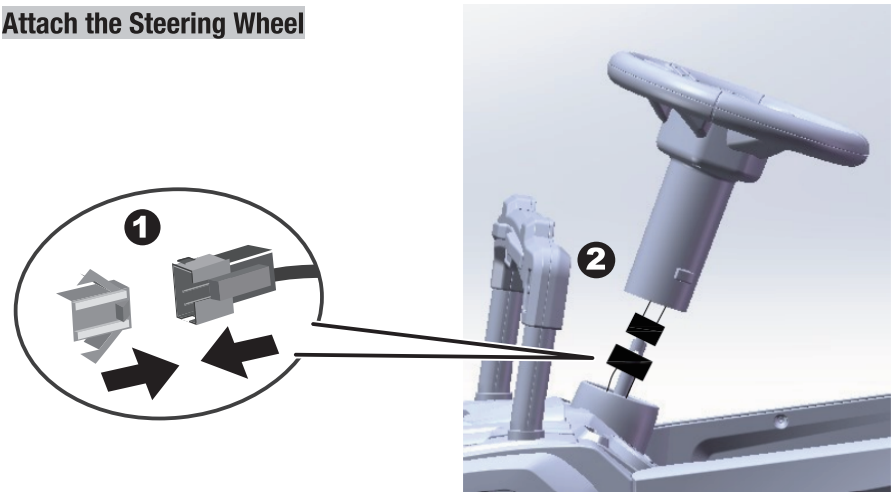

1.Connect the terminal of the steering wheel to terminal of the instrument panel.

2.Press two protruding black buttons firmly, and insert the steering wheel until you hear it “click”.

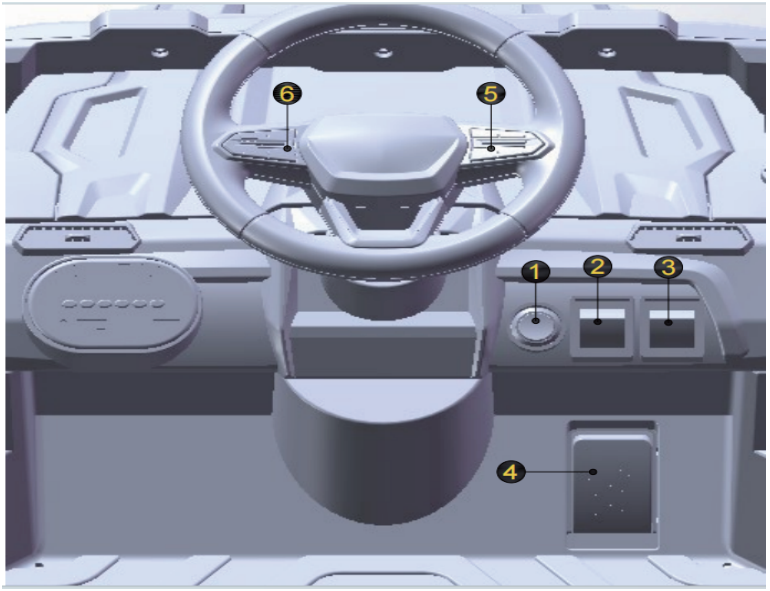

1. **Power button:** Turns the product on and off.
2. **Forward/reverse Switch:** Changes the direction that product moves from forward to reverse.
   - To move the product forward, shift the switch to top position.
   - To move the product backward, shift the switch to down position.
3. **Viriable speed button:** Makes the product faster or slower. (Optional)
4. **Foot Pedal:** Applies power (speed) to the product.
   - To move the product, press the pedal down.
   - To brake or slow down, release pressure from the pedal.
5. **Horn button:** Press for horn playing.
6. **Sound buttons:** Press for sound playing.

⚠ IMPORTANT

- **Always stop vehicle when changing the speed or direction to avoid damage the gears and motor.**
- **HIGH SPEED (If equipped): Make sure your child knows how to steer, how to start and stop the product and knows the rules for safe driving.**



⚠ WARNING: ADULT OPERATING REQUIRED

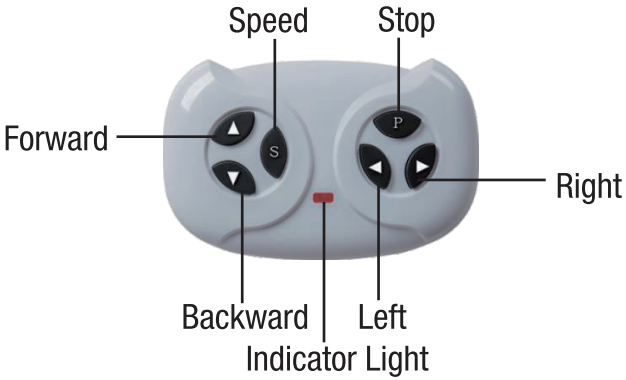

The remote control has precedence over foot pedal operation.(The foot pedal wontwork while you operate the Remote Controller)

INSERT THE BATTERIES

Lift the battery compartment door on the back of the controller and insert twoAAA(LR03) batteries.

NOTE:Batteries not included.
Refer to the battery information on page 3.

1.Connection button (build connection)

The remote control is already completed the verification of the code when it leave the factory,If the remote control cannot be used, please try the following steps:
Step1:Turn off the power switch on the vehicle.
Step 2:Hold down Forward & Backward button for 3 seconds start match code, the first LED flicker;
Step 3:Turn on the car's power now, the first LED lit up, the red indicator lights stopflicker,successfully matched the code.

2.Brake button

Press the button to stop the vehicle,press it again to release the brake.

3. Speed select button

The switch operates the vehicle to move at low,normal or high speed. When one light is on,it means low speed,two lights are onit means medium speed, and three lights are on, it means high speed.

HINT: The vehicle is designed to operate at low speed only in reverse.

⚠ WARNING!

- **ONLY an adult is allowed charge and recharge the battery!**
- **This product with Charging Protection: when charging, all functions will be cut off.**

- The POWER SWITCH must be turned in OFF position when charging.
- Before the first use, you should charge the battery for 4-6 hours. Do not recharge the battery for more than 10 hours to avoid overheating the charger.
- When the vehicle begins to run slowly, recharge the battery.
- After each use or once a month minimum recharge time as 8 to 12 hours, less than 20 hours at most.
- Use only battery(ies) and charger specified by the manufacturer. Using another battery or charger may cause a fire or explosion. Do not use the battery or charger for any other product.
- If your ride-on with a Digital voltmeter(IF EQUIPPED), the magnitude of voltage will tell you how much power is remaining in the battery when you must recharge the battery. Make sure the vehicle is stop!

12V product	**less than 12.5V**	**The battery needs to be charge.**
24V product	**less than 24.1V**	

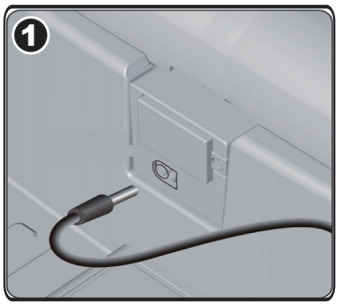

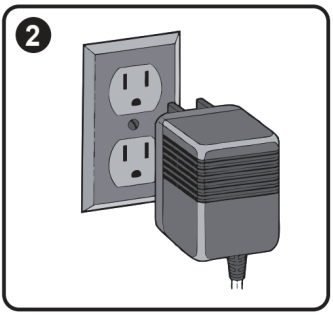

Battery Disposal

The battery will eventually lose the ability to hold a charge. Depending on the amount of use, and varying conditions, the battery should operate for one to three years.
Important! Recycle the dead battery responsibly. The battery contains lead acid (electrolyte) and must be disposed of properly and legally. It is illegal in most areas to incinerate lead acid batteries or dispose of them in landfills. Take it to a federal or state-approved lead acid battery recycler, such as local automotive battery retailer.
Do not throw the battery away with your regular household waste!

Problem	Possible Cause	Solution
Vehicle does not run	Battery low on power	Recharge battery.
	Thermal fuse has tripped	Reset fuse, see <Fuse>
	Battery connector or wires are loose	Check that the battery connectors are firmly plugged into each other. If wires are loose around the motor ***contact your distributor please.***
	Battery is dead	Replace battery, ***contact your distributor please.***
	Electrical system is damaged	***Contact your distributor please.***
	Motor is damaged	***Contact your distributor please.***
Vehicle does not run very long	Battery is under charged	Check that the battery connectors are firmly plugged into each other when recharging
	Battery is old	Replace battery, ***contact your distributor please.***
Vehicle runs sluggishly	Battery low on power	Recharge battery, ***contact your distributor please.***
	Battery is old	Replace battery, ***contact your distributor please.***
	Vehicle is overload	Reduce weight on vehicle.
	Vehicle is being used in harsh conditions	Avoid using vehicle in harsh conditions, see <User Notice>.
Vehicle needs a push to go forward	Poor contact of wires or connectors	Check that the battery connectors are firmly plugged into each other. If wires are loose around the motor, ***contact your distributor please.***
	“Dead Spot” on motor	A dead spot means the electric power is not being delivered to the terminal connection and the vehicle needs repair. ***Contact your distributor please.***
Difficult shifting from forward to reverse or vice-versa	Attempting to shift while the vehicle is motion	Completely stop the vehicle and shift, see <Use Your Ride-On>
Loud grinding or clicking noises coming from motor or gear box	Motor or gears are damaged	***Contact your distributor please.***
Battery will not recharge	Battery connector or adapter connector is loose	Check that the battery connectors are firmly plugged into each other.
	Charger not plugged in	Check that the battery charger is plugged into a working wall outlet.
	Charger is not working	***Contact your distributor please.***
Charger feels warm when recharging	This is normal and not a cause for concern	

Completely read through this manual and the troubleshooting guide table before calling. If you still need help resolving the problem ***Contact your distributor please.***

Maintaining | 14

- It is parents' responsibility to check main parts of the toy before using, Must regularly examine for potential hazard, such as the battery, charge, cable or cord, plug, screws are fastening enclosure of other parts and that in the event of such damage, the toy must not be used until that damage had been properly removed.
- Park the vehicle indoors or cover it with a tarp to protect it from wet weather.
- Recharge the battery after each use. Only an adult can handle the battery. Recharge the battery at least once a month when the vehicle raider is not being used.
- Do not wash the vehicle with a hose. Do not wash the vehicle with soap and water. Do not drive the vehicle in rainy or snowy weather. Water will damage the motor, electric system and battery.
- Clean the vehicle with a soft, dry cloth. To restore shine to plastic parts, use a non-wax furniture polish. Do not use car wax. Do not use abrasive cleaners.
- When not using, all the electrical source should be turn off. Turn off the power switch and disconnect the battery connection.

Fuse

The battery features a thermal fuse with a rest fuse that will automatically trip and cut all power to the vehicle if the motor, electric system or battery is overloaded. The fuse will reset and power will be restored after the unit is turned OFF for 20 seconds and then turned ON again. If the thermal fuse trips repeatedly during normal use, the vehicle may need repair. **Contact your distributor please.**

To avoid losing power, follow these guidelines:

- Do not overload the vehicle.
- Do not tow anything behind the vehicle.
- Do not drive up steep slopes.
- Do not drive into fixed objects, which may cause the wheels to spin, causing the motor to overheat.
- Do not drive in very hot weather, components may overheat.
- Do not allow water or other liquids to come in contact with the battery or other electric components.
- Do not tamper with the electric system. Doing so may create a short, causing the fuse to trip.

⚠ **RISK OF FIRE. Do not bypass. Replace only with a new fuse.**

Our products are suitable for
ASTM F963; GB6675; EN71 and EN62115 standard.

If you have any question, please contact at L843485741@outlook.com directly.