Ultra Finishing
Inspired living

Ultra Finishing Ltd
Hamnett House
Gibbet Street
Halifax
West Yorkshire
HX2 0AX
Tel: 01422 356863
Website: www.ultra-finishing.co.uk

CUSTOMER DATA SHEET - SHOWERS

SALES CODE:	HEAD21	DESCRIPTION:	8" Apron Fixed Head 195mm Diameter

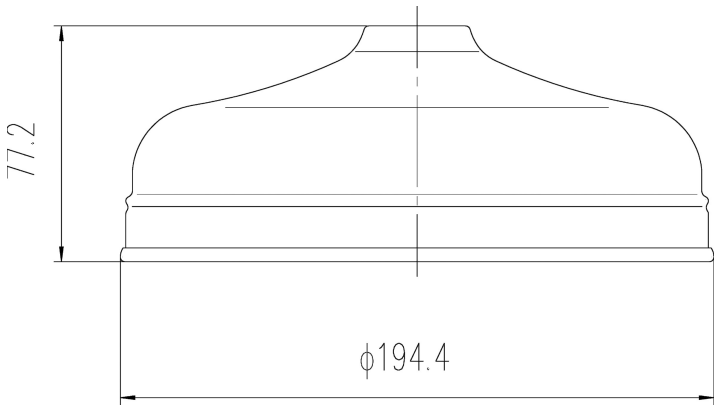

PRODUCT DIMENSIONS				
Length(mm)	Width (mm)	Height (mm)	Depth (mm)	Nett Wgt Kg
	194	77	194	0.3

PACKAGING DIMENSIONS			
Length (mm)	Width (mm)	Depth (mm)	Gross Wgt Kg
210	200	80	0.8

PACKAGING DATA			
Box Colour	White Cardboard Box		
Box Qty	1	Label Colour	White Label
Label Size	100 X 50	Label Qty	2

OUTER BOX DIMENSIONS (If Applicable)				
Length (mm)	Width (mm)	Height (mm)	Depth (mm)	Gross Wgt Kg
	225	435	450	8
Barcode	5055146185895			

PRODUCT DETAILS

Coutry of Origin	China
Fitting Instruction	No
Product Material	Brass
Mount Type	Surface, Wall
Outlet Elbow Supplied	No
Easy Clean	No
Head Included	Yes
Handset Included	No
Body Jets Included	Not Applicable
No of Body Jets	Not Applicable
Operating Pressure (bar)	0.5
Valve/Cartridge Type	Not Applicable

Flow Rates (L/min)	0.1 bar	N/A	0.5 bar	N/A	1 bar	N/A	2 bar	N/A	3 bar	N/A	
TMV2 Approved	No			Approval No.	N/A						
TMV3 Approved	No			Approval No.	N/A						
WRAS Approved	No			Approval No.	N/A						
Head Function	Single										
Handset Function	Not Applicable										
Body Jet Info	Not Applicable										
Pipe Size	Not Applicable										
Pipe Centres	N/A										
Colour/Finish	Chrome										
Hose Included	Not Applicable										
No. of Outlets	N/A										