Installation Guide

Vela PRO Rectangular Medicine Cabinet with Mirror

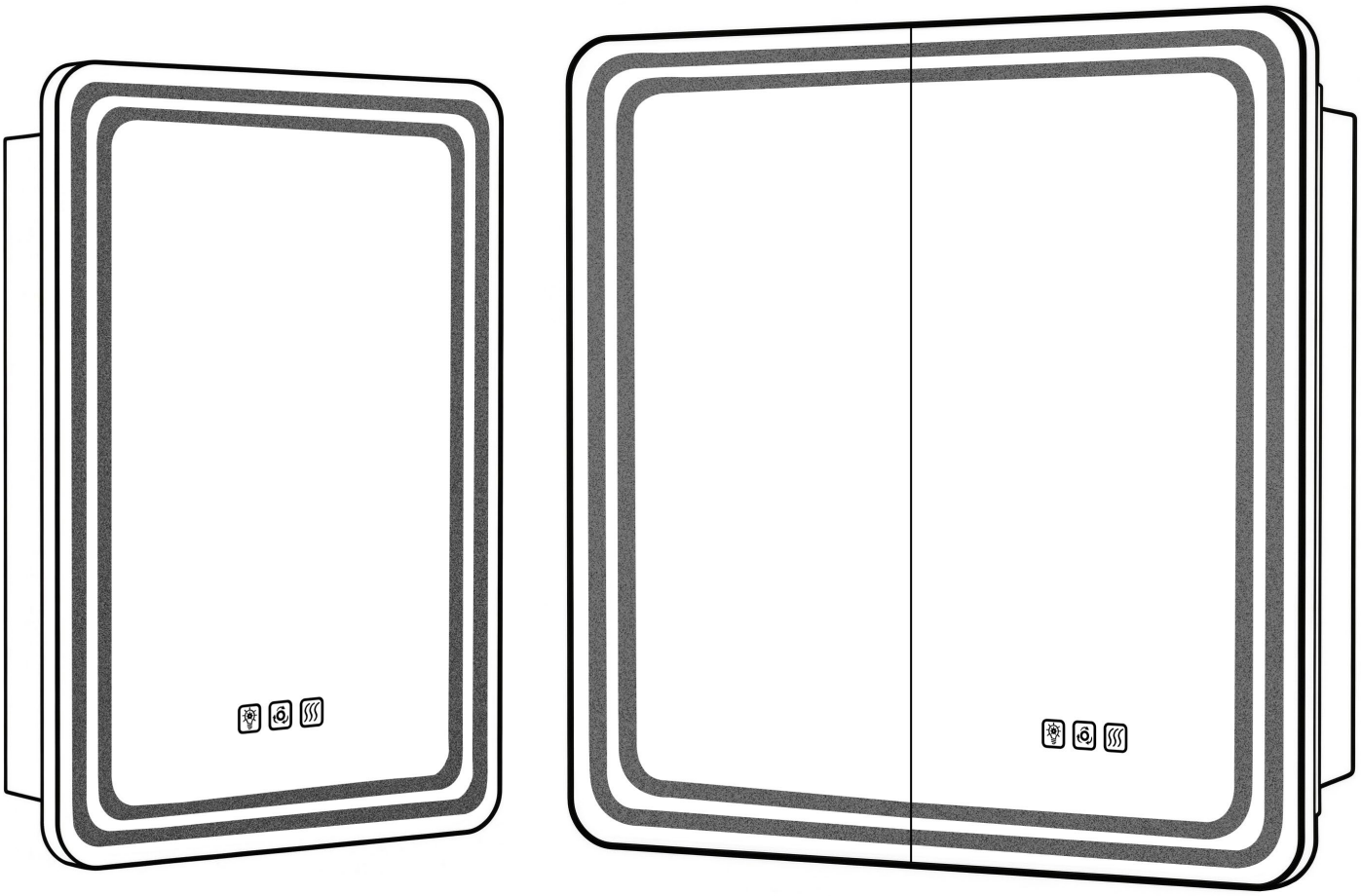

Thank you very much for choosing our product !

Tools Required for Installation



Drill



Tape measure



Safety goggles

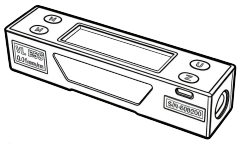

Spirit level



Marker pen

Included Installation Hardware



Screws*9

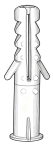

Plastic anchors*9



Phillips Screwdriver*1



Wire Nut*4

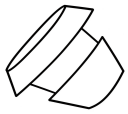

Hole Plugs*6

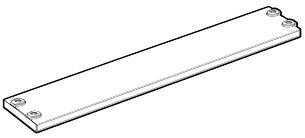

Glass shelves*2

Safety Information & Installation Precautions

IMPORTANT SAFETY INSTRUCTIONS

Please read all instructions carefully before installing and using this LED medicine cabinet. Keep this manual for future reference. Improper installation may cause electric shock, fire, product damage, or personal injury.

WARNING: Risk of Electric Shock, Fire, or Injury

Always turn OFF the power supply at the circuit breaker before installation, wiring, cleaning, or maintenance.
For hardwired installation, electrical connections must be completed by a qualified licensed electrician and must comply with all applicable local electrical codes and regulations.
This product must be connected to a properly grounded electrical system. Do not remove or bypass the grounding connection.
Do not install or use the cabinet if any electrical components, wires, plugs, or the mirror surface are damaged.
Do not use this product outdoors. It is designed for indoor bathroom use only.
Keep electrical components away from direct water spray. Do not allow water to enter the LED module, power supply, outlet, or wiring connections.
Do not modify, disassemble, or replace electrical components without authorization from the manufacturer.

Electrical Installation Safety

Plug-in Installation
- Use only a properly grounded standard electrical outlet with the correct voltage rating.
- Ensure the power outlet is easily accessible after installation.
- Do not use extension cords or adapters that are not approved for this product.
- Do not overload the built-in electrical outlet or USB ports (if equipped).
- Make sure the power cord is not pinched, damaged, or exposed to sharp edges during installation

Hardwired Installation

- Verify that the electrical supply matches the product requirements before installation.
- Turn off the circuit breaker before connecting wires.
- Connect wires according to the wiring instructions:
- **Black wire: Live / Hot wire (L)**
- **White wire: Neutral wire (N)**
- **Green wire: Ground wire (G/E)**
- Use approved wire connectors and secure all electrical connections inside an appropriate junction box.
- The junction box must remain accessible for future maintenance or servicing.
- Bathroom installations should follow local electrical codes, including GFCI protection requirements where applicable.

Installation Location Safety

- Before drilling, confirm that there are no hidden electrical wires, plumbing pipes, or structural obstacles behind the wall.
- Make sure the mounting surface can safely support the weight of the fully assembled cabinet.
- Use appropriate mounting hardware according to the wall type (wood stud, concrete, or drywall).
- For recessed installation, ensure the wall cavity has sufficient space and that existing wiring or plumbing will not interfere with installation.
- Maintain proper clearance from water sources such as faucets, shower areas, and bathtubs according to local building codes.

Handling and Mounting Safety

- The mirror glass is fragile. Handle the cabinet carefully during unpacking, installation, and adjustment.
- Inspect the product and all components immediately after opening the package. Do not install a damaged product.
- Two or more people are recommended for lifting and mounting larger cabinets to prevent injury or product damage.
- Wear safety glasses and protective equipment when drilling holes or installing wall anchors.
- Confirm that the cabinet is securely attached to the wall before use.
- Do not place excessive weight on the shelves. Follow the maximum shelf load rating specified in this manual

Usage and Maintenance Safety

- Disconnect power before cleaning or performing maintenance.
- Clean the mirror surface with a soft, non-abrasive cloth. Do not use harsh chemicals or abrasive cleaners.
- Do not allow children to play with electrical components, outlets, or USB ports.
- Do not insert objects into any openings of the cabinet or electrical outlets.
- If abnormal operation occurs (flickering lights, unusual noise, overheating, or electrical issues), disconnect power immediately and contact customer service.

Operation Instructions

Short press: Toggle ON/OFF (Blue=Off , White=On)
Frosted area illuminates with flowing light when activated

Color temperature: Short press to adjust color temperature (3000K → 4500K → 6500K)
Dimmable: Long press to adjust brightness by 10%~100%

Tap to turn the anti-fog function ON/OFF
Automatically turns off after 1 hour without operation

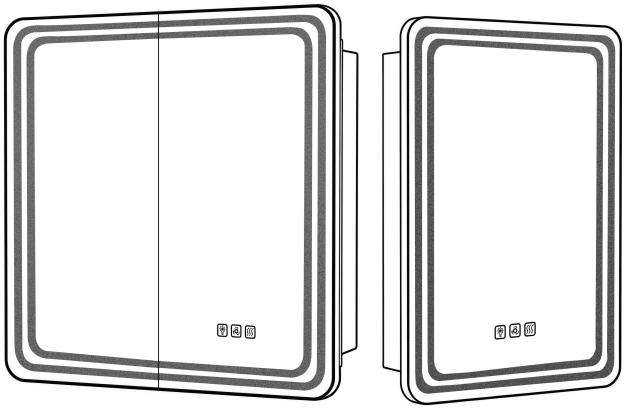

The button indicator turns white when the function is ON and blue when the function is OFF

Recessed Installation

Step 1

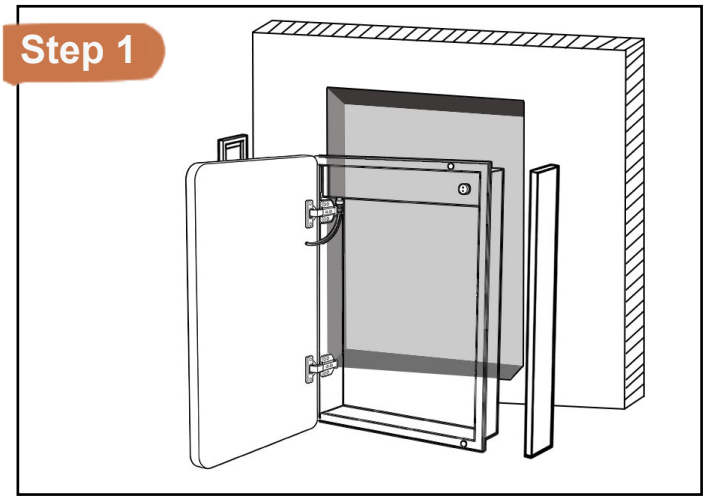

Remove the side panels of the cabinet

Step 2

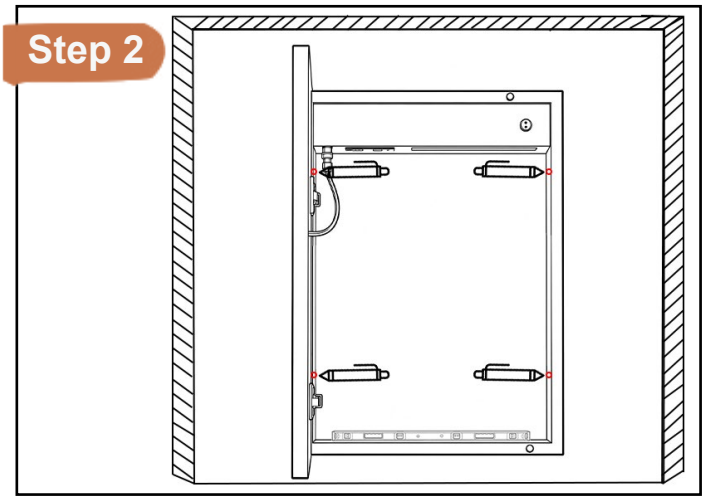

Place the cabinet into the pre-cut wall recess. Open the door. Use a level and marker to mark the mounting hole locations on both sides of the cabinet

Step 3

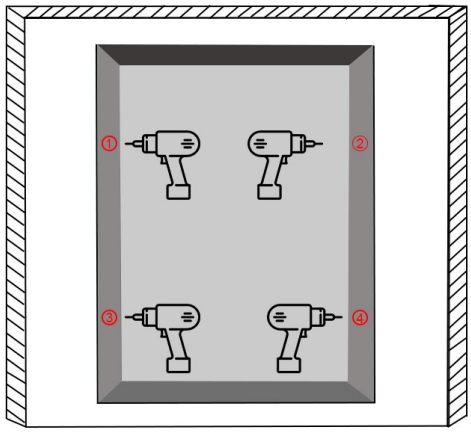

Drill pilot holes at the marked locations

Step 4

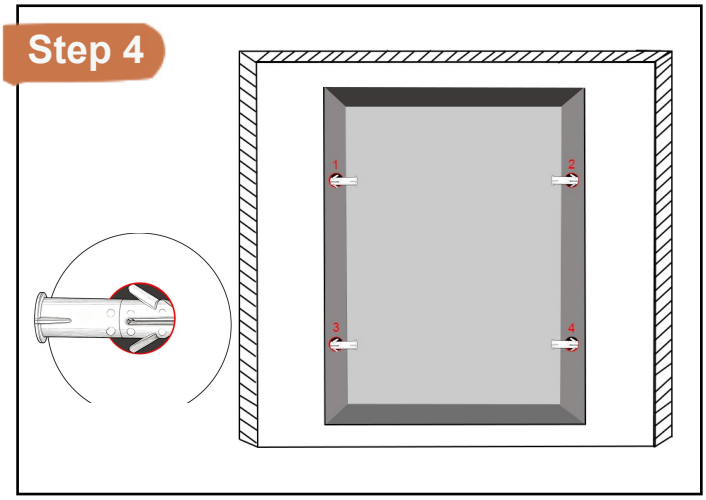

Insert the wall anchors into the drilled holes

Step 5

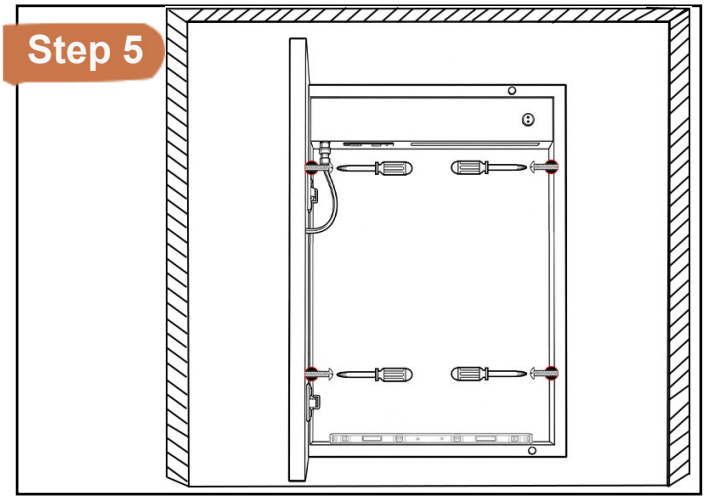

With two people, align the cabinet with the drilled holes. Install and tighten the screws to secure the cabinet to the wall

Step 6

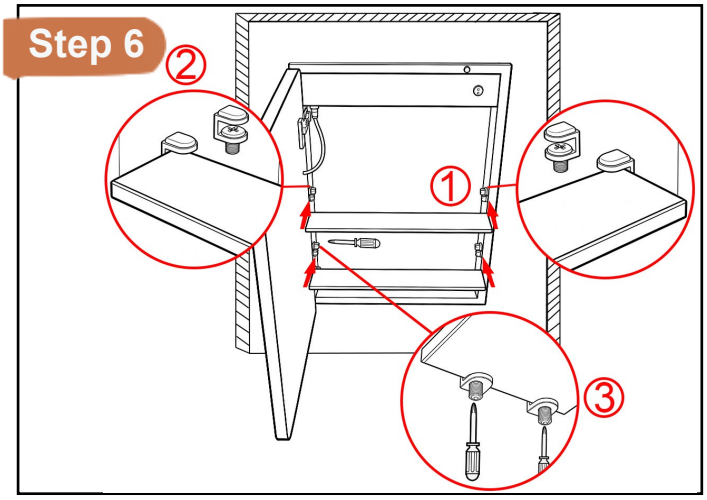

1. Insert one end of the shelf into the bracket.
2. Insert the other end into the bracket.
3. Slowly push the shelf inward until it engages the inner bracket. Tighten the screws under the brackets.

Step 7

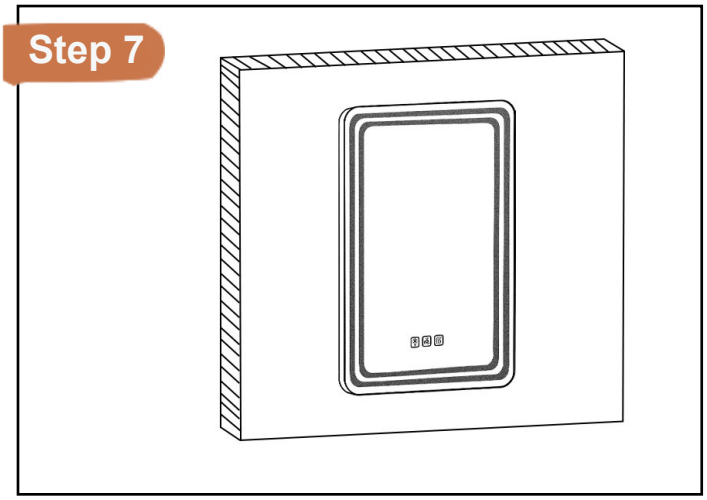

Installation Complete

Wall-Mounting Instructions

Step 1

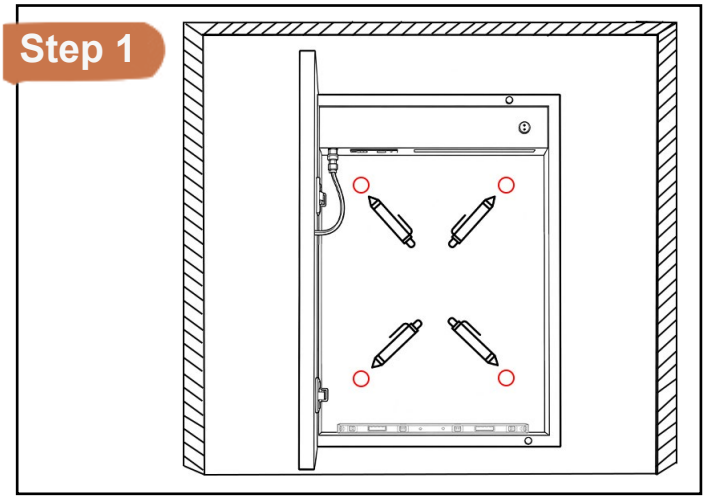

With two people, position the cabinet at the desired mounting location. Use a level to ensure the cabinet is straight. Mark the locations of the four mounting holes on the wall with a pencil or marker. These marks will guide the drilling process in the next step

Step 2

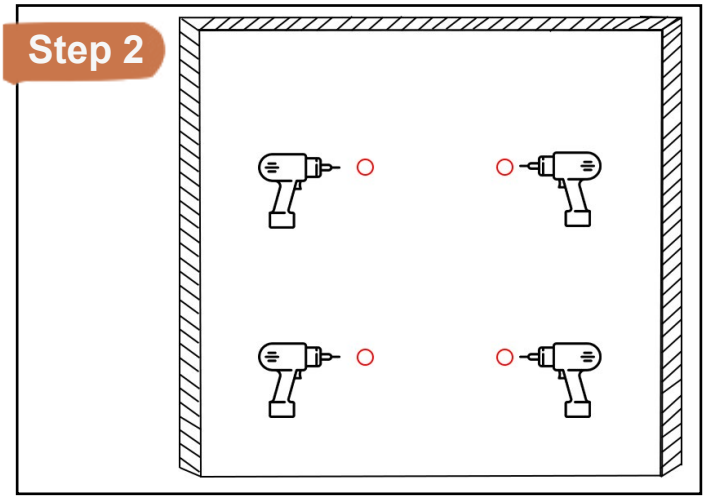

Drill pilot holes at the marked locations

Step 3

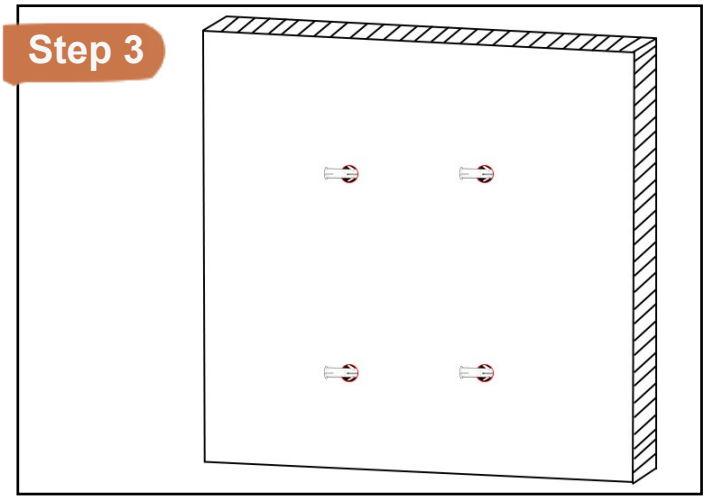

Insert the wall anchors into the drilled holes

Step 4

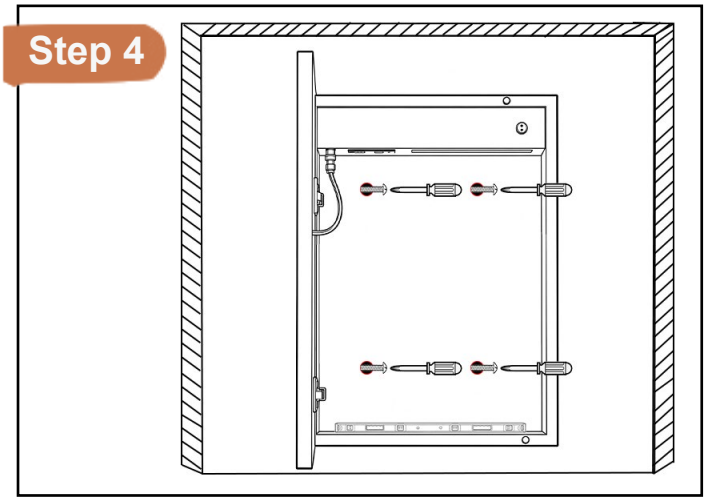

With two people, align the cabinet with the drilled holes. Install and tighten the four screws to secure the cabinet to the wall

Step 5

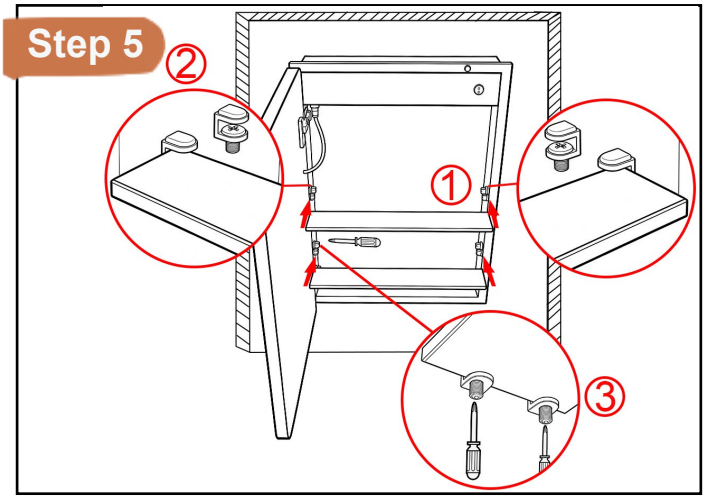

1. Insert one end of the shelf into the bracket.
2. Insert the other end into the bracket.
3. Slowly push the shelf inward until it engages the inner bracket. Tighten the screws under the brackets.

Step 6

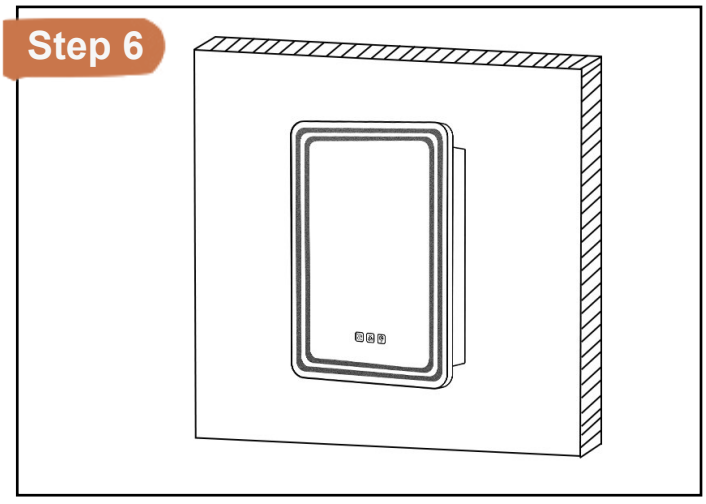

Installation Complete

Hinge Adjustment

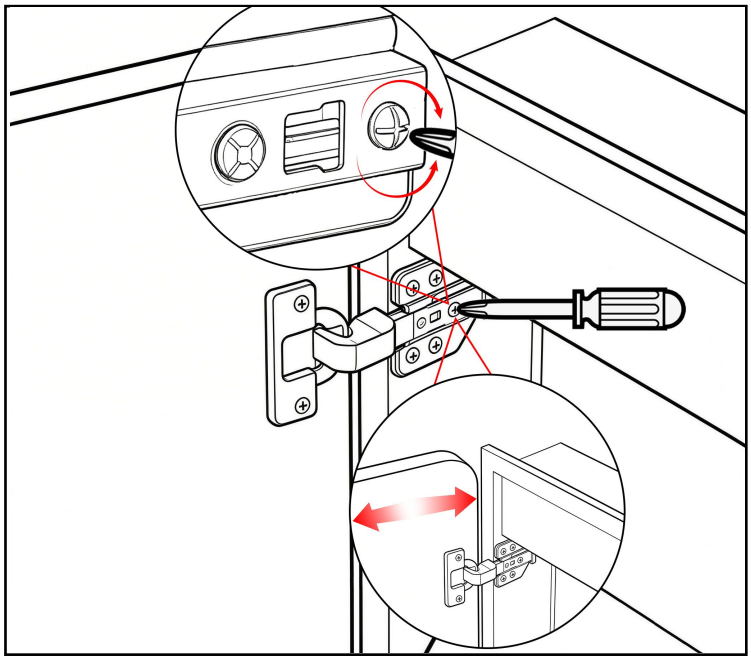

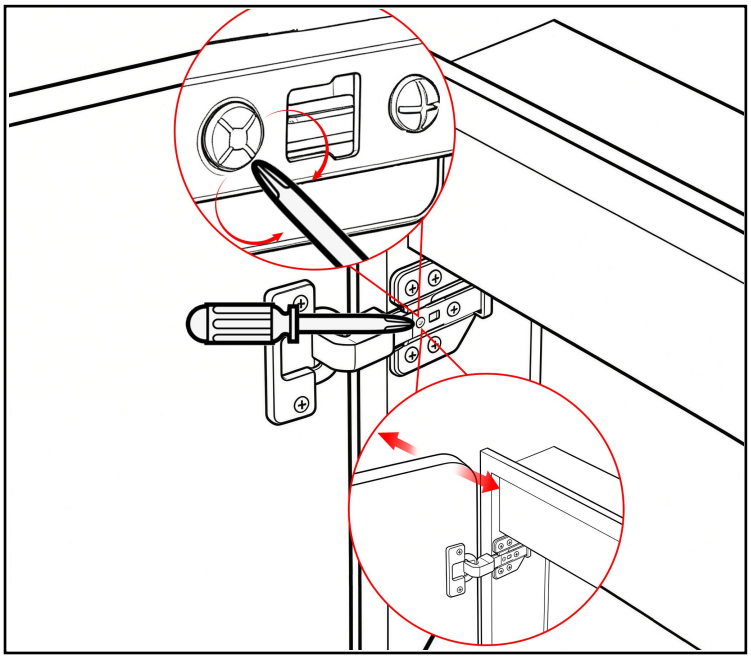

Dimensions

Product Specifications	Product Dimensions（in）			Cutout Dimensions（in）		
	W	H	D	W	H	D
16*28 Black/Silver	16	28	5.3	14 11/16 "	22 3/32 "	4 5/16 "
20*28 Black/Silver	20	28	5.3	18 19/32 "	21 11/16 "	4 5/16 "
24*32 Black/Silver	24	32	5.3	22 13/16 "	26 3/32 "	3 11/16 "
32*30 Black/Silver	32	30	5.3	30 19/32 "	23 11/16 "	4 5/16 "
36*32 Black/Silver	36	32	5.3	34 1/2 "	25 11/16 "	4 5/16 "
More models are continually being developed.....						

Size&Color

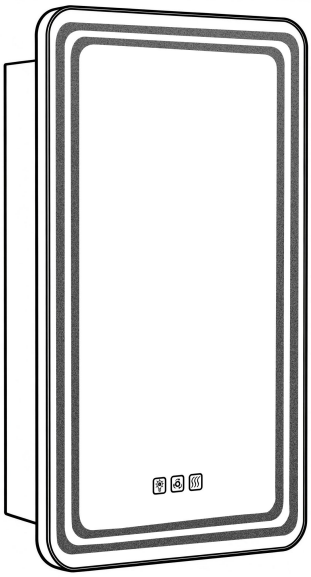

16*28 Black/Silver

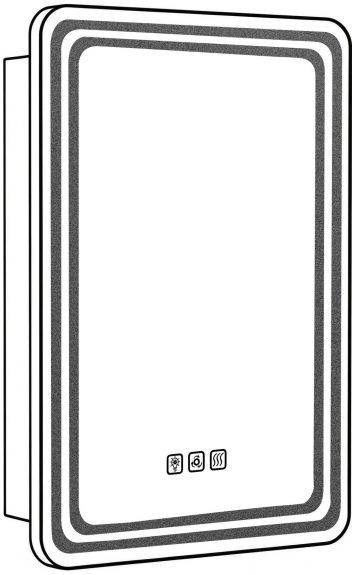

20*28 Black/Silver

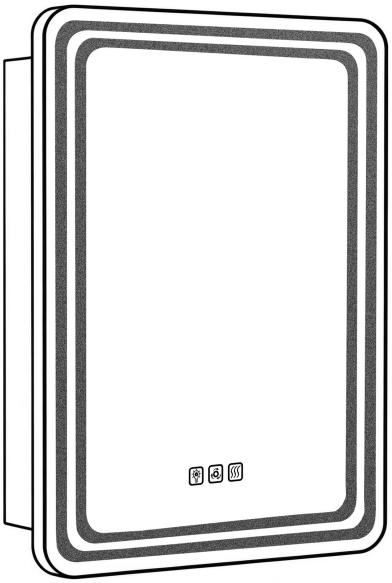

24*32 Black/Silver

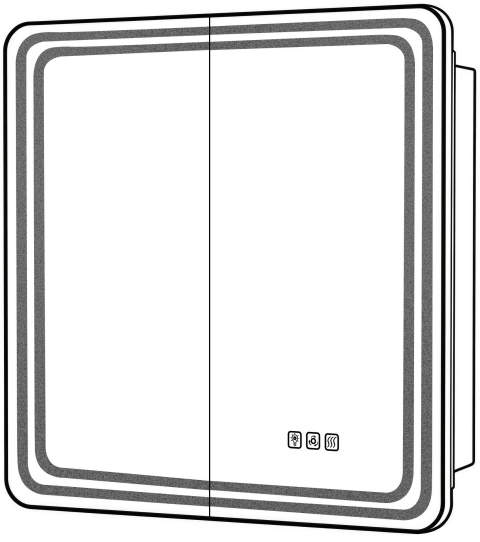

32*30 Black/Silver

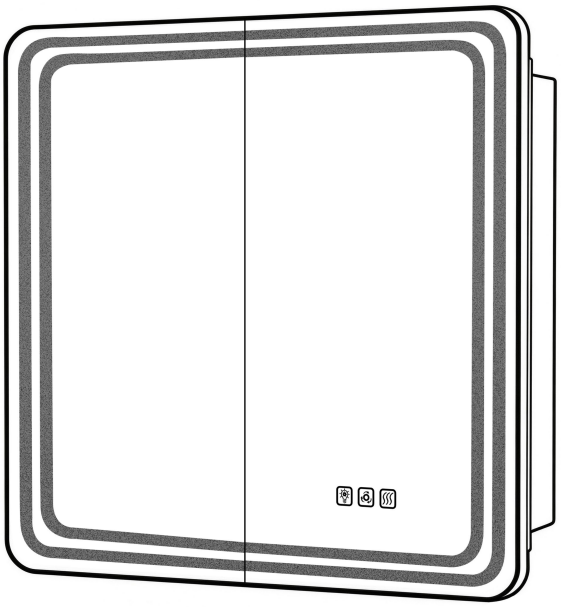

36*32 Black/Silver

Customer Support

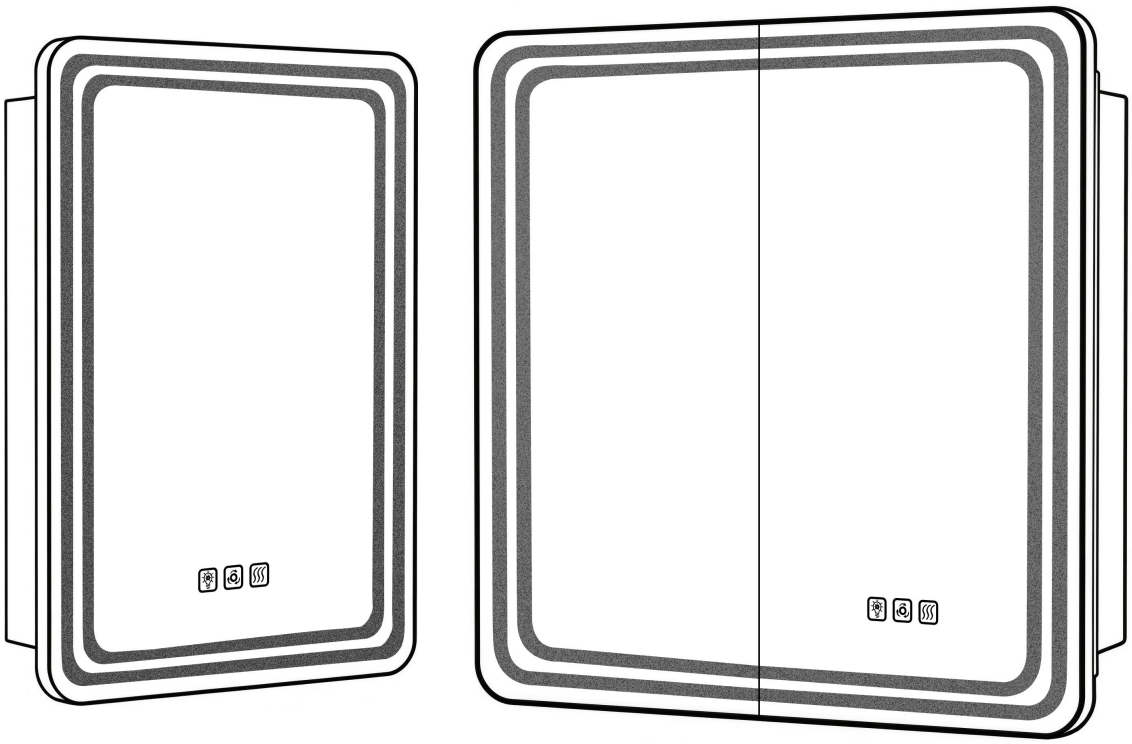

Scan to watch the product video

Scan to submit a service request

For more support, contact: cswanze@outlook.com