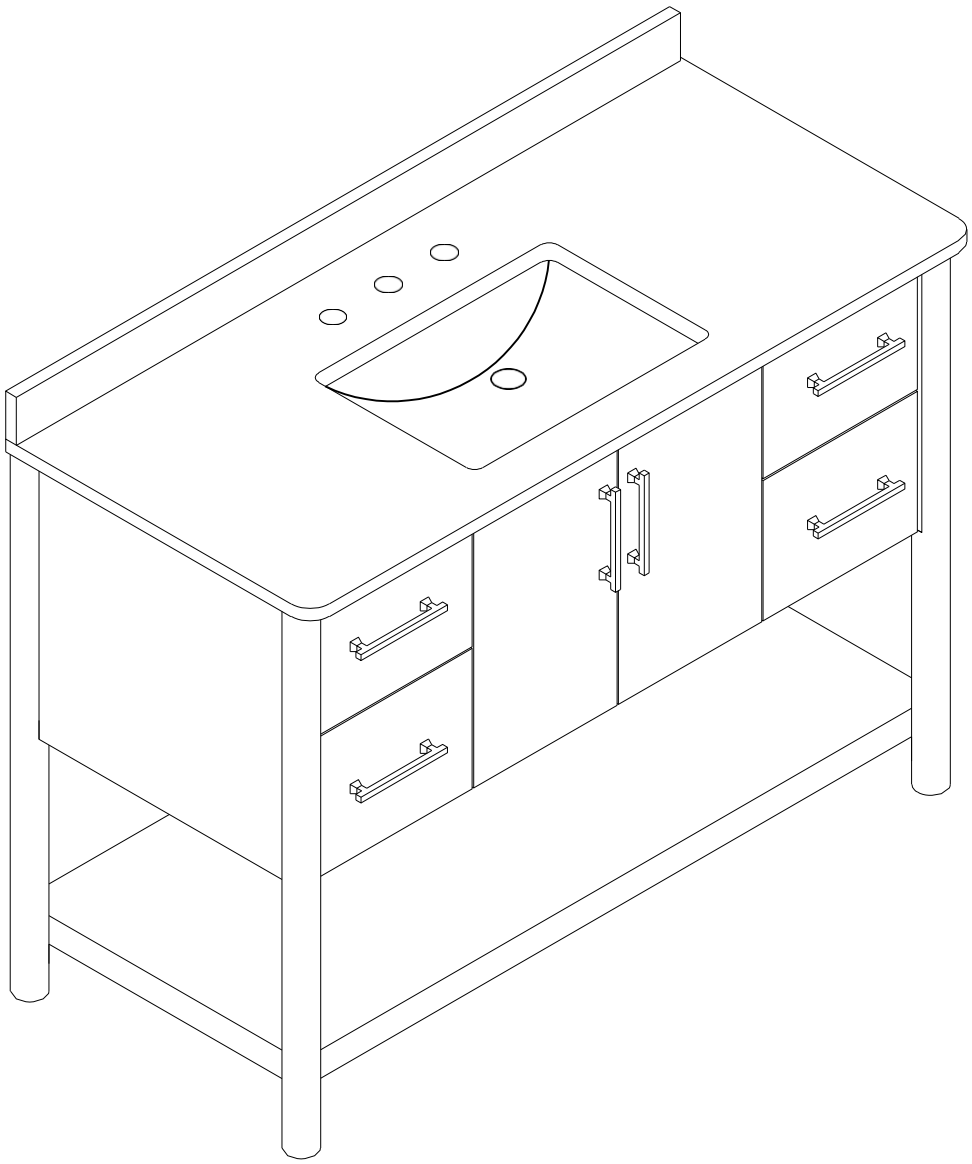

Bathroom vanity

BATHROOM VANITY INSTALLATION INSTRUCTIONS

Model: **SY-BV009-V48NA**

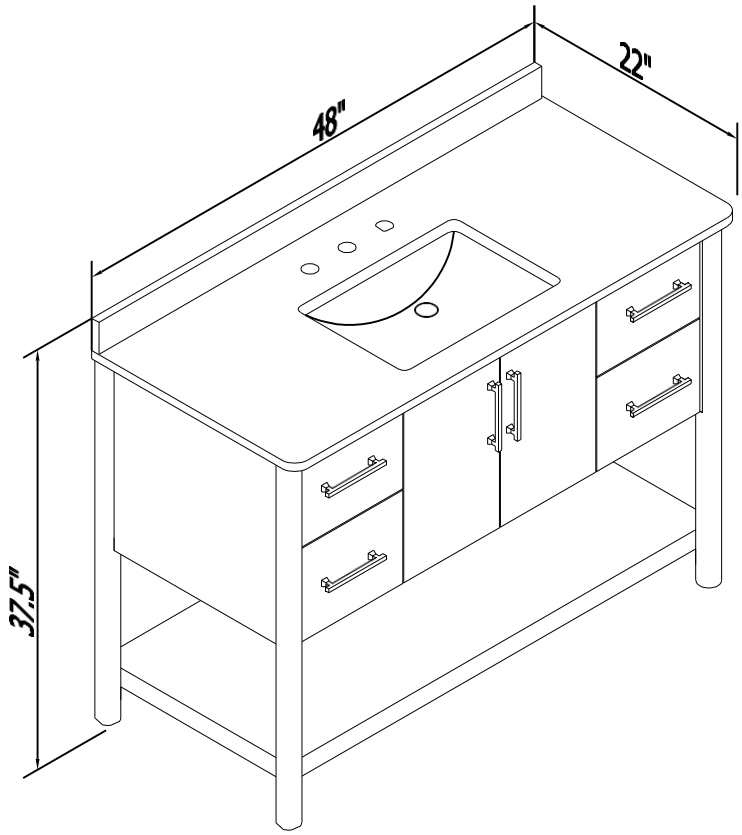

DIMENSIONS

Please refer to the dimension diagrams for detailed measurements of the vanity and sink configuration.

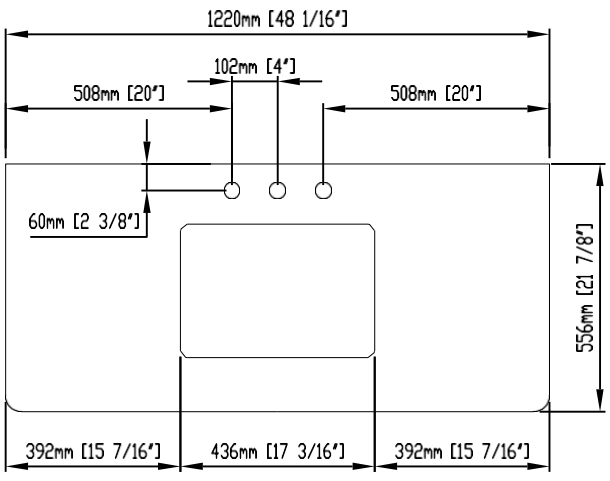

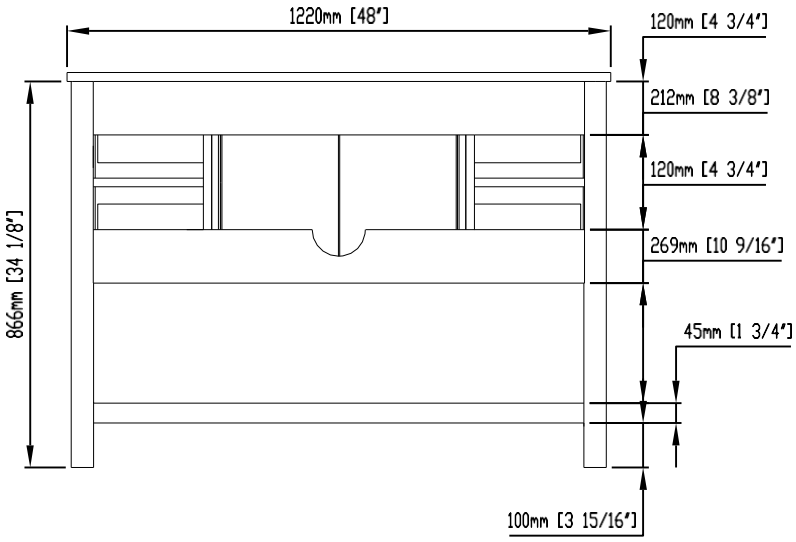

PART LIST

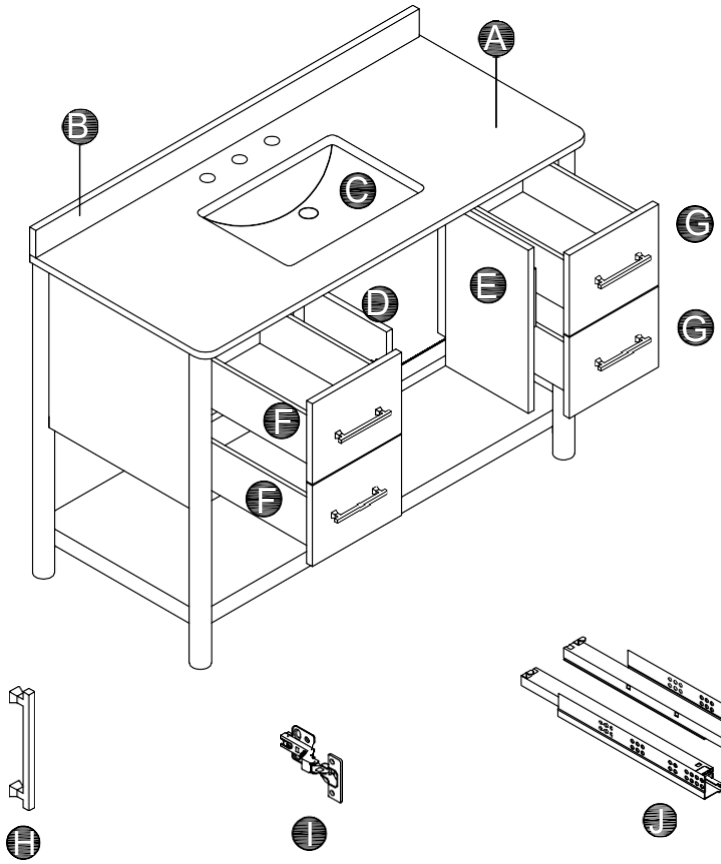

PART	DESCRIPTIONS	QUANTITY
A	Countertop	1
B	Backsplash	1
C	Basin	1
D	Door (Left)	1
E	Door (Right)	1

PART	DESCRIPTIONS	QUANTITY
F	Drawer (Left)	2
G	Drawer (Right)	2
H	Handle	6
I	Hinge	4
J	Drawer glides	4

TOOLS REQUIRED (NOT INCLUDED)

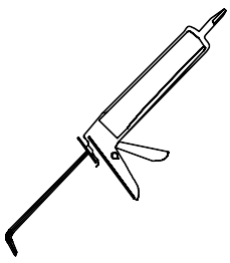

Silicone sealant

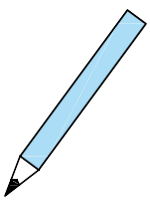

Pencil

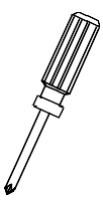

Screwdriver



Level

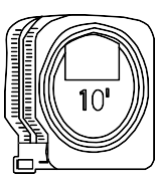

Measuring tape

INSTALLATION

STEP A - Unpack the Countertop

1. Carefully lift the countertop **(A)** from the vanity base.
2. Place it on a protected surface such as cardboard to prevent scratches or damage.
3. Remove all protective foam and packaging materials from the vanity cabinet.

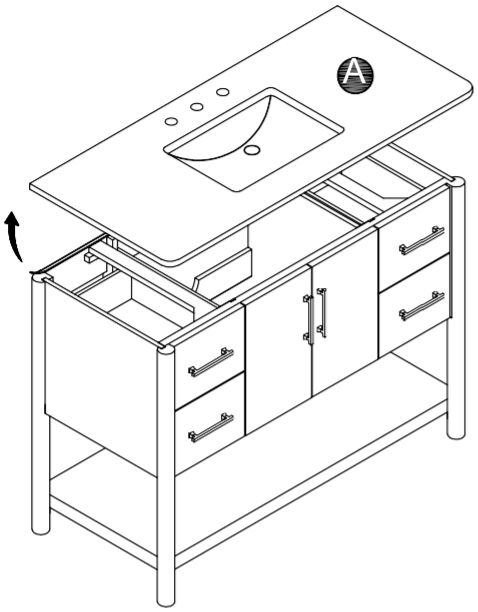

STEP B - Secure the Countertop (Silicone Required)

1. Apply a thin, continuous bead of **silicone sealant** along the top edges of the vanity cabinet.
2. Carefully place the countertop back onto the vanity base.
3. Align the countertop evenly on all sides.
4. Press firmly to secure the countertop in place.
5. Wipe away any excess silicone immediately with a clean cloth.
   Note: Silicone sealant is **not included**.

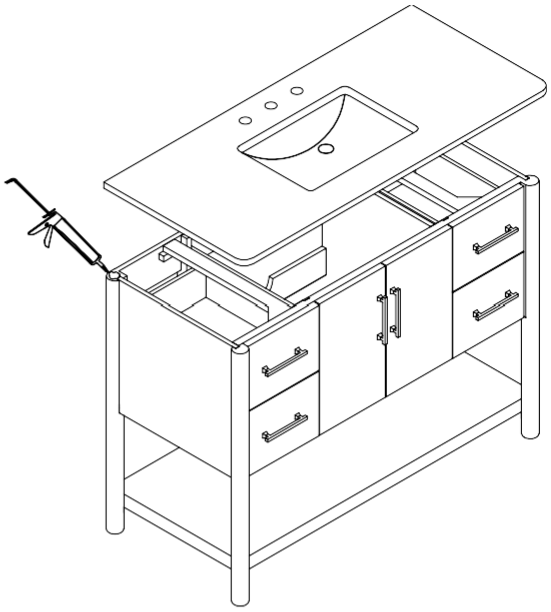

STEP C - Install the Backsplash

1. Clean the back edge of the countertop where the backsplash will be installed.
2. Apply a thin bead of silicone to the bottom edge of the backsplash **(B)**.
3. Align the backsplash with the rear edge of the countertop.
4. Carefully press the backsplash into place.

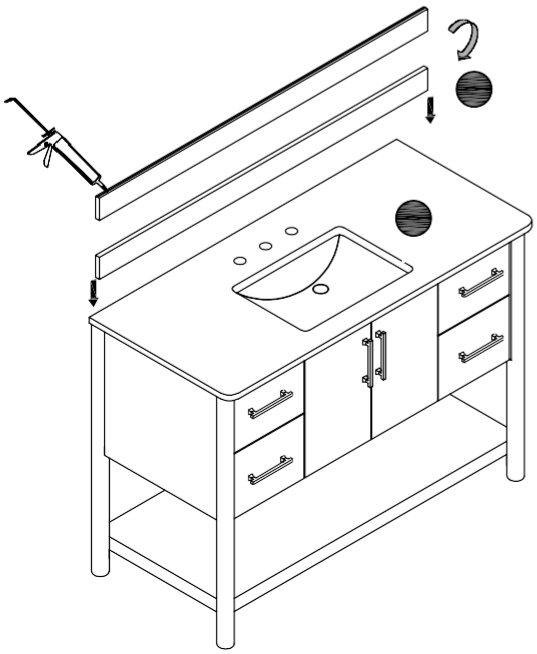

STEP D - Final Installation Step

1. Remove any excess silicone.
2. Allow the silicone to fully cure before using the vanity.

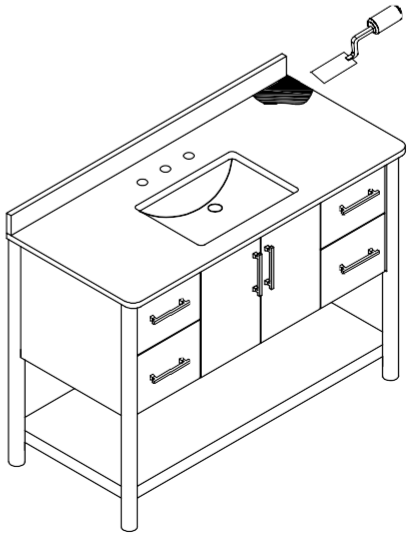

CURING TIME

Allow the silicone to cure for **24 hours** before using the vanity.
Do **not expose the vanity to water** until the silicone is fully cured.

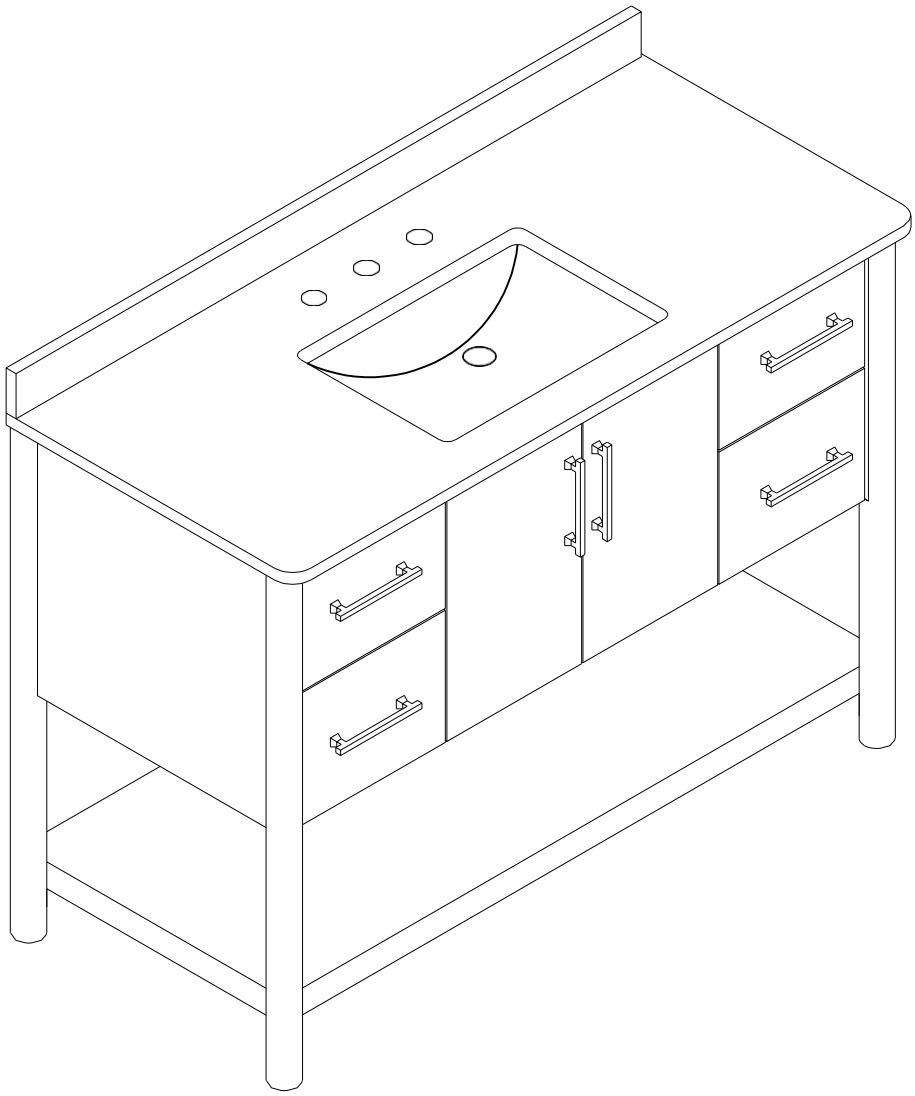

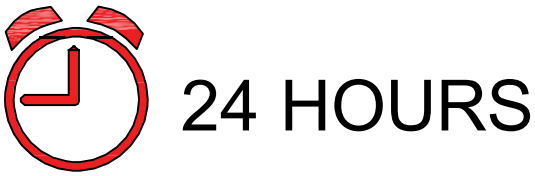

DRAWER REMOVAL & INSTALLATION

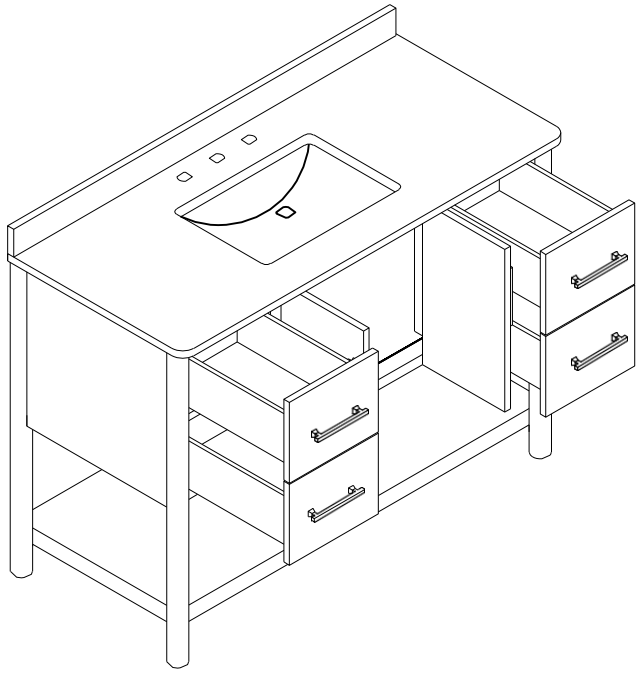

REMOVING THE DRAWER

1. Pull the drawer out completely.

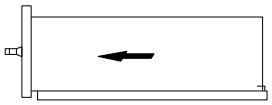

2. Press the release levers on both sides of the drawer slides.

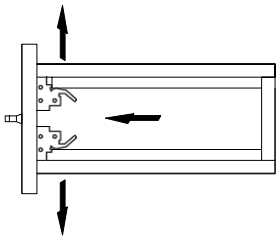

3. Lift the front of the drawer slightly.

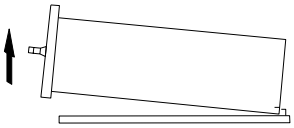

4. Pull the drawer forward to remove it from the cabinet.

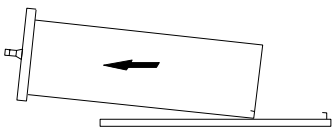

INSTALLING THE DRAWER

1. Align the drawer slides with the cabinet tracks.

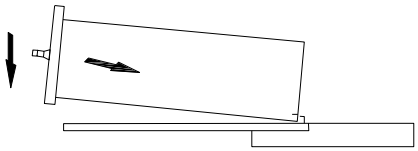

2. Carefully insert the drawer into the cabinet.

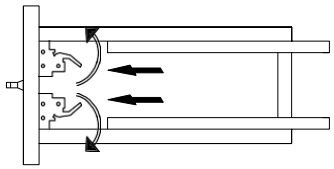

3. Push the drawer inward until it locks into place.

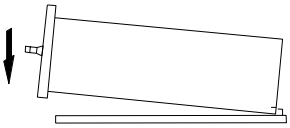

4. Open and close the drawer to ensure smooth operation.



HINGE ADJUSTMENT INSTRUCTIONS

Cabinet doors can be adjusted in **three directions** to achieve proper alignment.

Depth Adjustment (In / Out)

Turn adjustment screw **(A)** to move the door **inward or outward**.

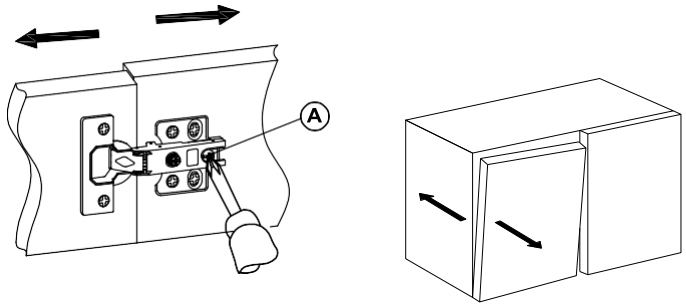

Side Adjustment (Left / Right)

Turn adjustment screw **(B)** to move the door **left or right**.

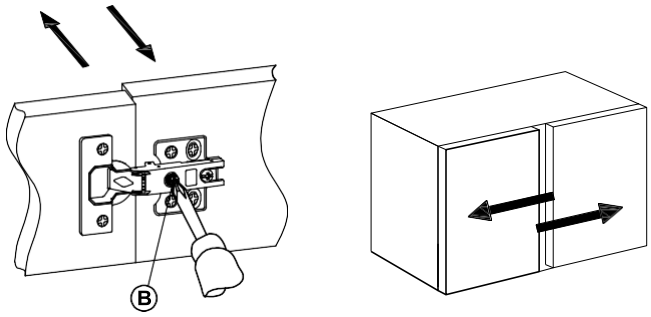

Height Adjustment (Up / Down)

Loosen screws at position **(C)**, adjust the door **up or down**, then re-tighten the screws.

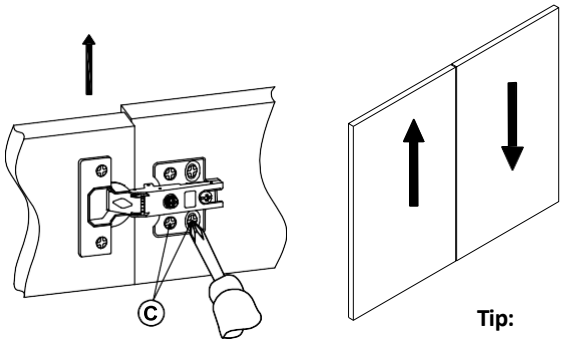

Tip:

Make small adjustments and check the door alignment after each adjustment.

IMPORTANT SAFETY INFORMATION

- Do not fully tighten screws until all parts are properly aligned.
- Over-tightening hardware may damage the product.
- Professional installation is recommended if you are not familiar with plumbing connections.
- Keep all small parts away from children during assembly.