INSTALLATION MANUAL

RY-NT2605

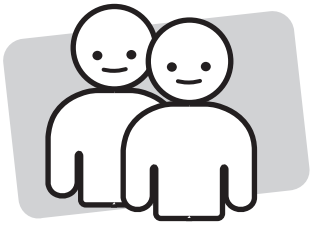

Try to find a partner to install with you, which can speed up the installation efficiency and shorten the time.

260309-v1

Before You Start

- Please read all instructions carefully.
- Retain instructions for future reference.
- Separate and count all parts and hardware.
- Read through each step carefully and follow the proper order.
- We recommend that, where possible, all items are assembled near to the area in which they will be placed in use, to avoid moving the product unnecessarily once assembled.
- Always place the product on a flat, steady and stable surface.
- Keep all small parts and packaging materials for this product away from babies and children as they potentially pose a serious choking hazard.

Assembly Instructions

We have designed our furniture with you,the customer in mind.Our clear, easy to follow step by step instructions will guide you through the project from start to finish. Feel confident that this will be a fun and rewarding project. The final product will be a quality piece of furniture that will go together smoothly and give years of enjoyment.



Please do not return to the store
Broken or missing Hardware?
Need help with Assembly?
If you have any questions just email us at
ryhome_service@163.com

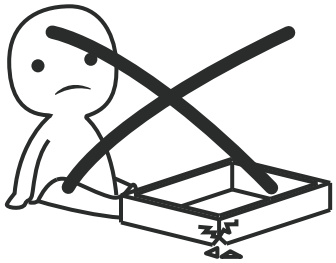

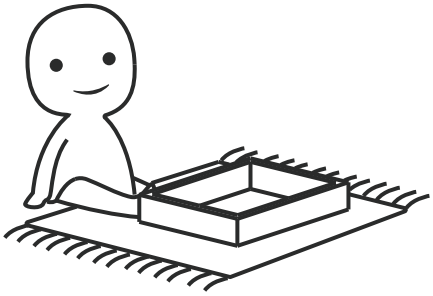

AVOID SCRATCHES!

In order to avoid scratching this furnuture should be assembledon a soft layer-could be a rug.

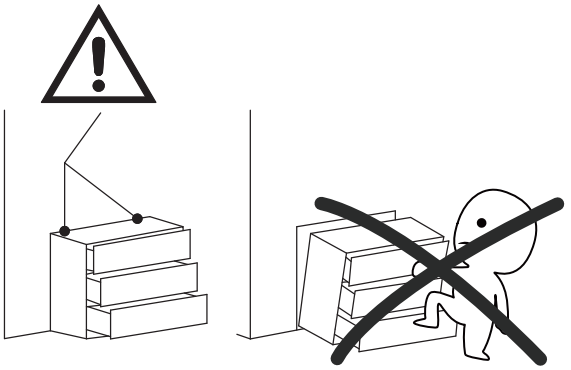

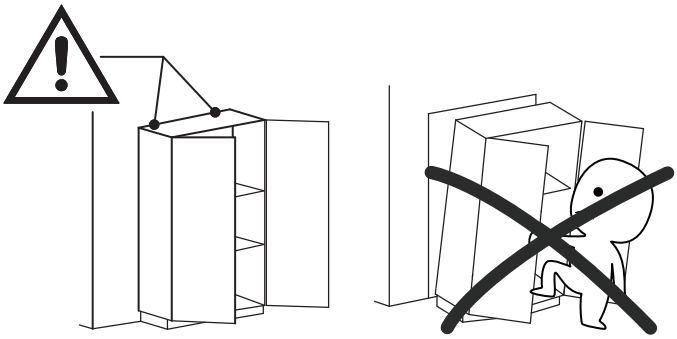

ANTI-TOPPLE WARNING !

Overturned furniture can cause serious or fatal crush injuries. To prevent tipping over, be sure to use the wall attachment, if not included with this product. Please purchase the wall attachment that fit your wall. If unsure, seek professional advice. Please read and follow each step of the instructions carefully.

IMPORTANT !

It is important that any product which is assembled using any kind of screw is re-tightened 2 weeks after assembly, and once every 3 months - in order to assure stability through-out the lifespan of the product.

For regular maintenance and cleaning of the product, for the frame, please use a rag dipped in neutral detergent to fully wipe it, and then dry it with a clean rag.For glass materials, wipe with a rag dampened with water glass cleaner, and then dry with a dry rag.

Do not use an electric screwdriver, and do not use too much force when installing, because the board is easy to break.

Completed Assembly

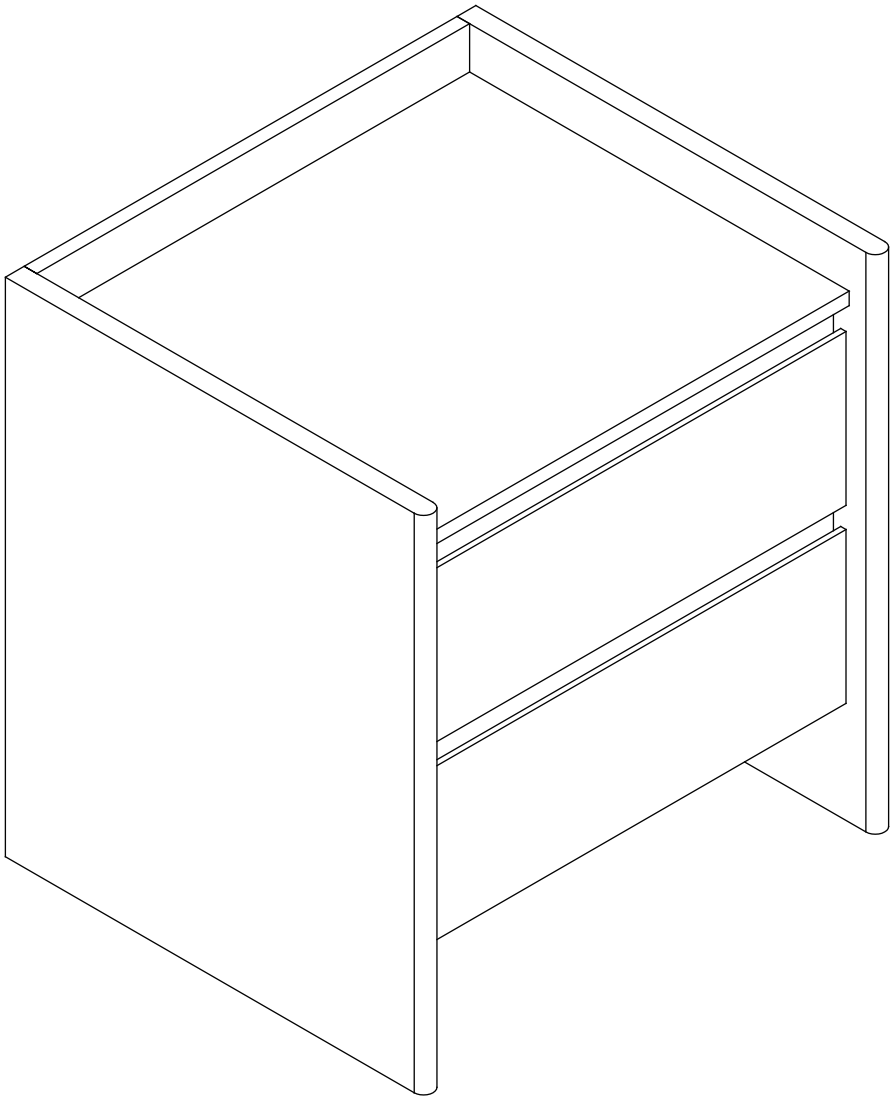

Parts Description

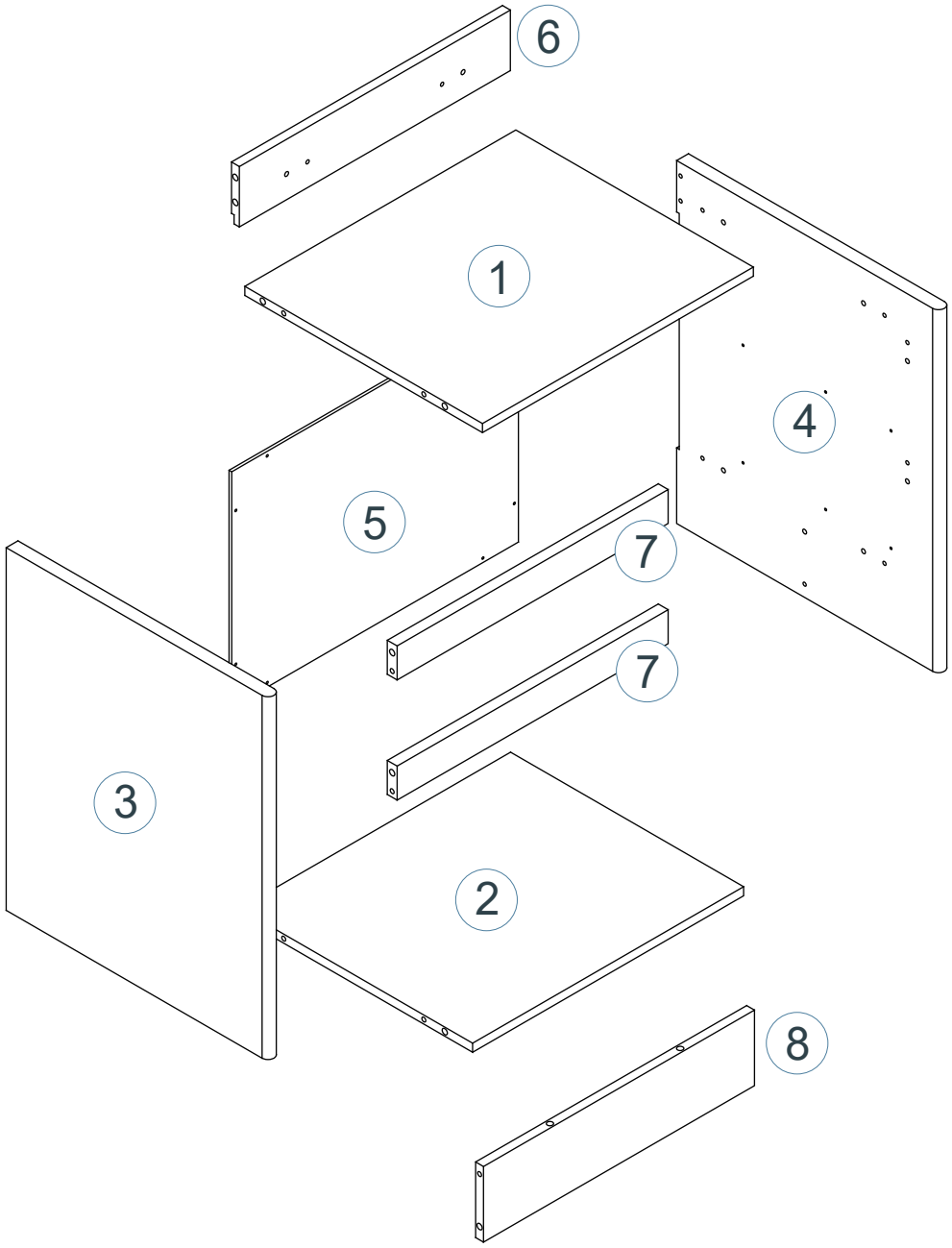

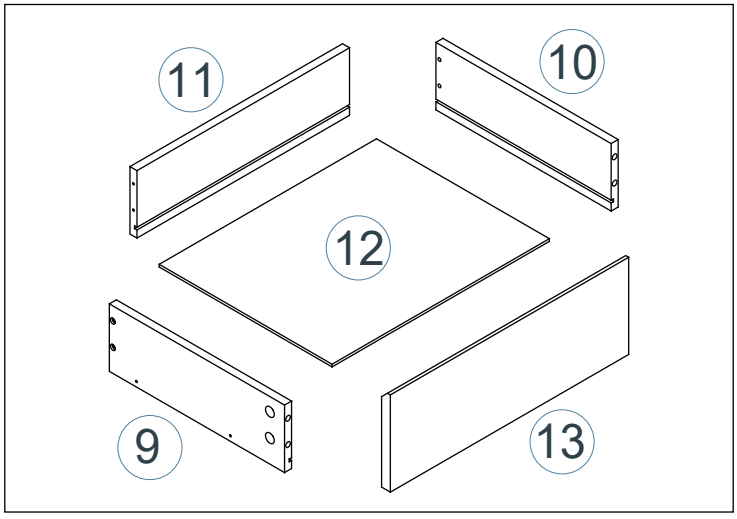

x2

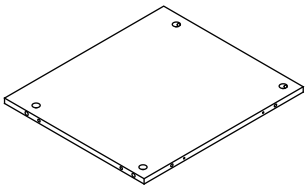

1

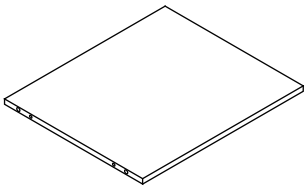

2

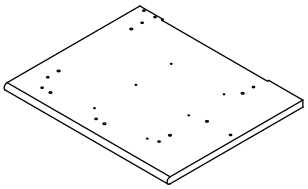

3

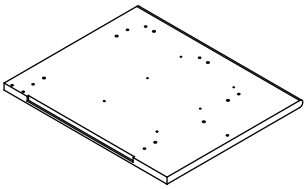

4

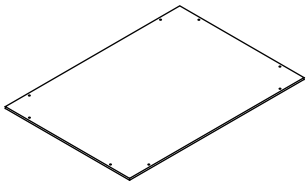

5

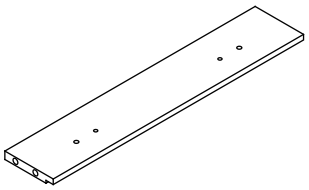

6

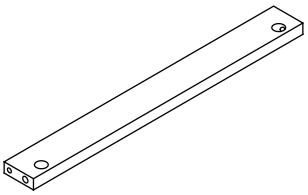

7 x2

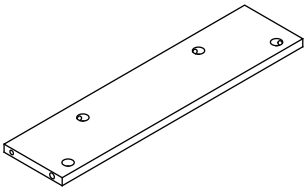

8

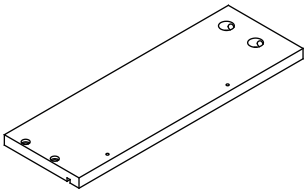

9 x2

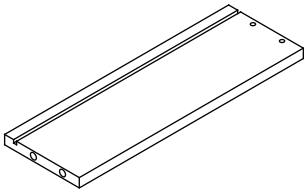

10 x2

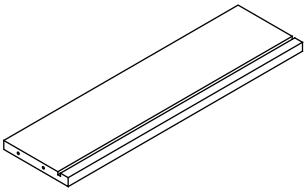

11 x2

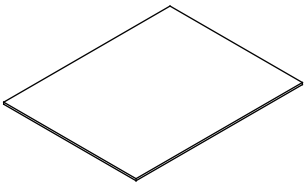

12 x2

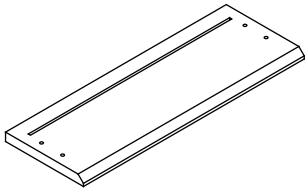

13 x2

A 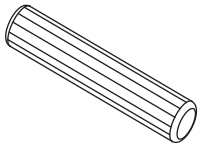 6x30mm Dowel 16pcs	B 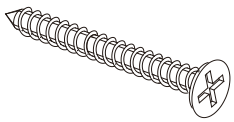 4 x 35mm Long Screw 2pcs	C 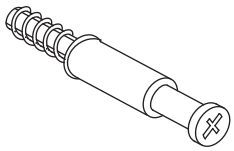 Cam Bolt 28pcs
D 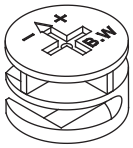 Cam Nut 28pcs	E 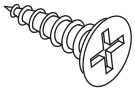 3 x 12mm Screw 24pcs	F 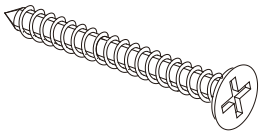 4 x 30mm Screw 8pcs
G 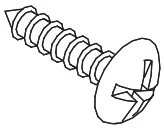 3 x 12mm Screw 8pcs	H  Plastic Glide 4pcs	CL 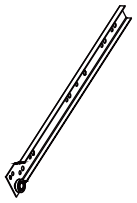 300mm Slide Rail 2pcs
CR 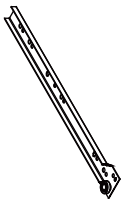 300mm Slide Rail 2pcs	DL 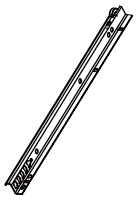 300mm Slide Rail 2pcs	DR 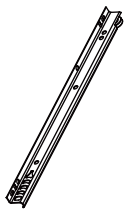 300mm Slide Rail 2pcs



Note: Please do not use any power tools. Use of power tools may cause damage and void manufacture warranty.

Instructions For Fastening Cam Bolt and Cam Lock



CAM BOLT



CAM LOCK

Cam Bolt

Place Cam Bolt on the designated pre-drilled hole on the panel. Use a Phillips Screwdriver to screw in Cam Bolt vertically until shoulder is snug and flushed with panel. Do not over-tighten or under-tighten Cam-bolt. See illustrations below.

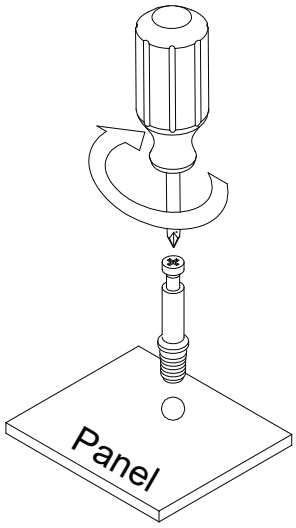

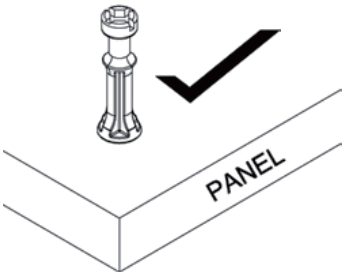

Shoulder is flushed (on the same level) with the panel.

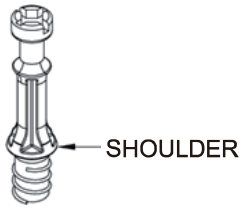

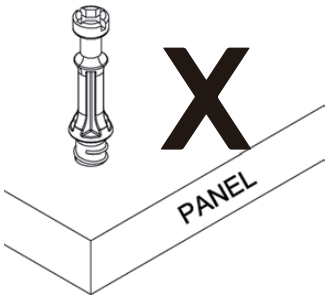

Shoulder is above the panel.

CAM-LOCK
Align the arrow on the Cam-lock to the Cam-bolt head and insert the Cam-lock.

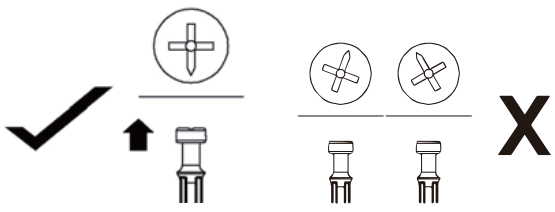

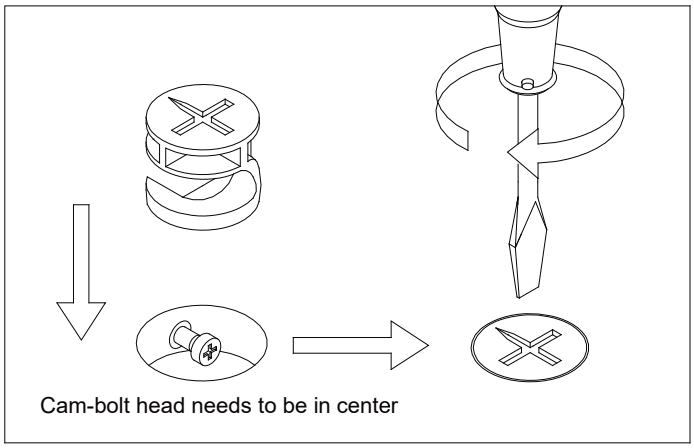

Use a Flat-head Screwdriver to turn Cam Lock clockwise to lock onto the head of the Cam Bolt. Turn until it is snug (about a half turn) – over-tightening could damage Cam Lock and/or Cam Bolt.

Step 1

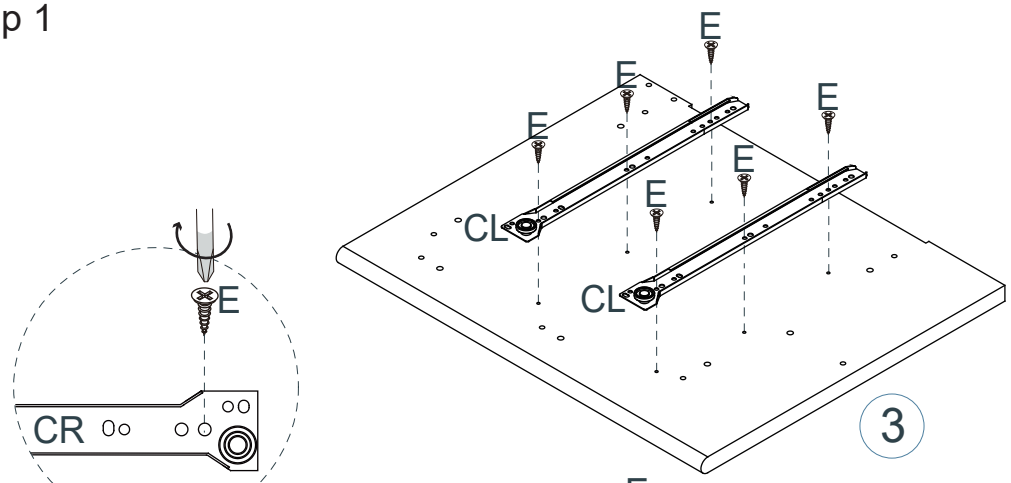

Hardware Needed		
E		x12
CL		x2
CR		x2

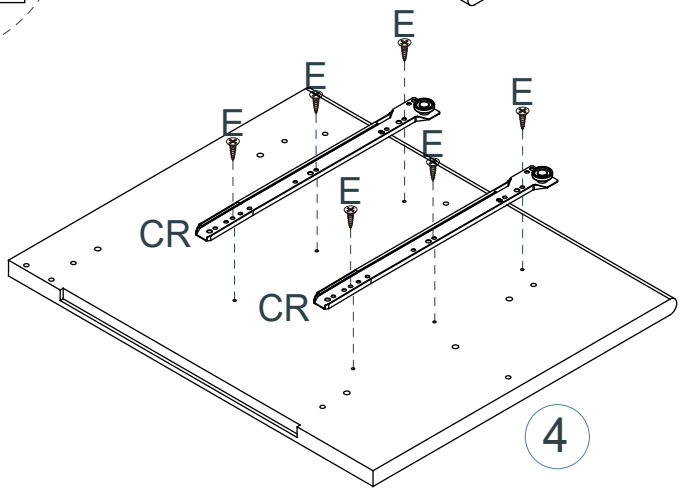

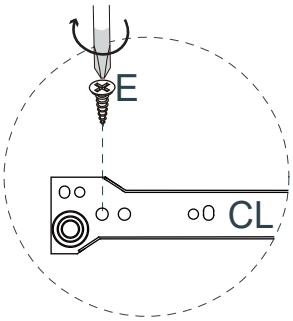

Step 2

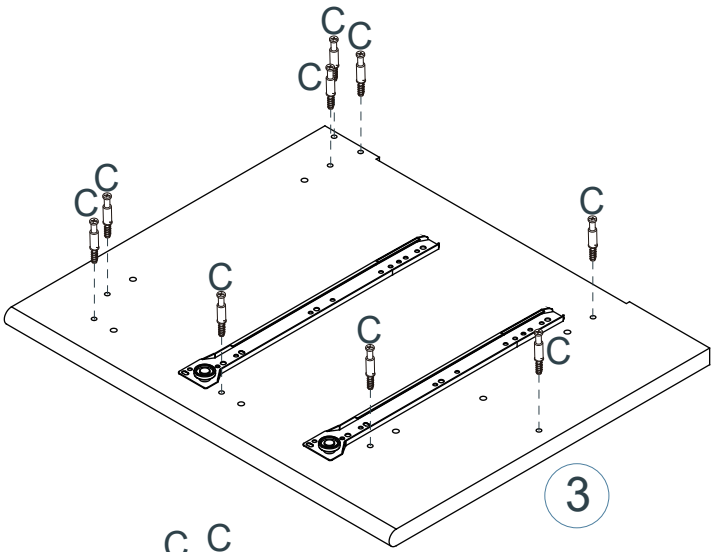

Hardware Needed		
C		X18

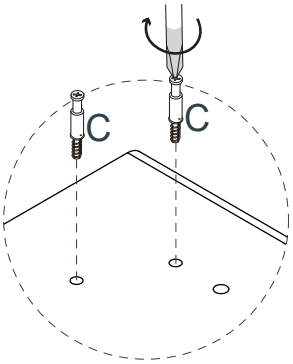

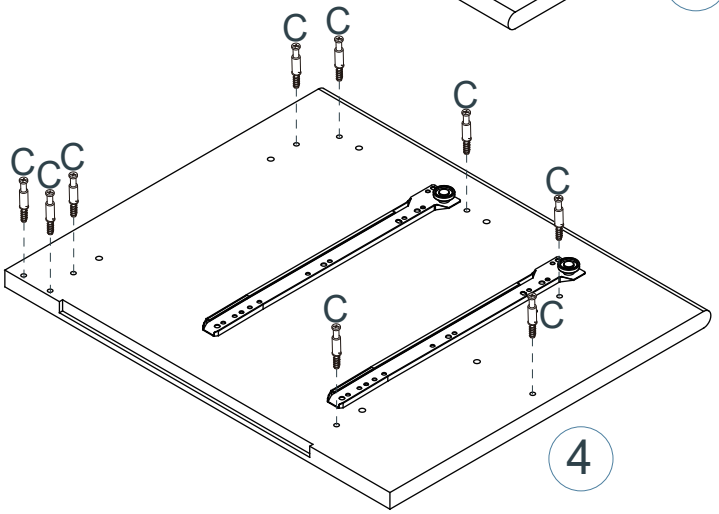

Step 3

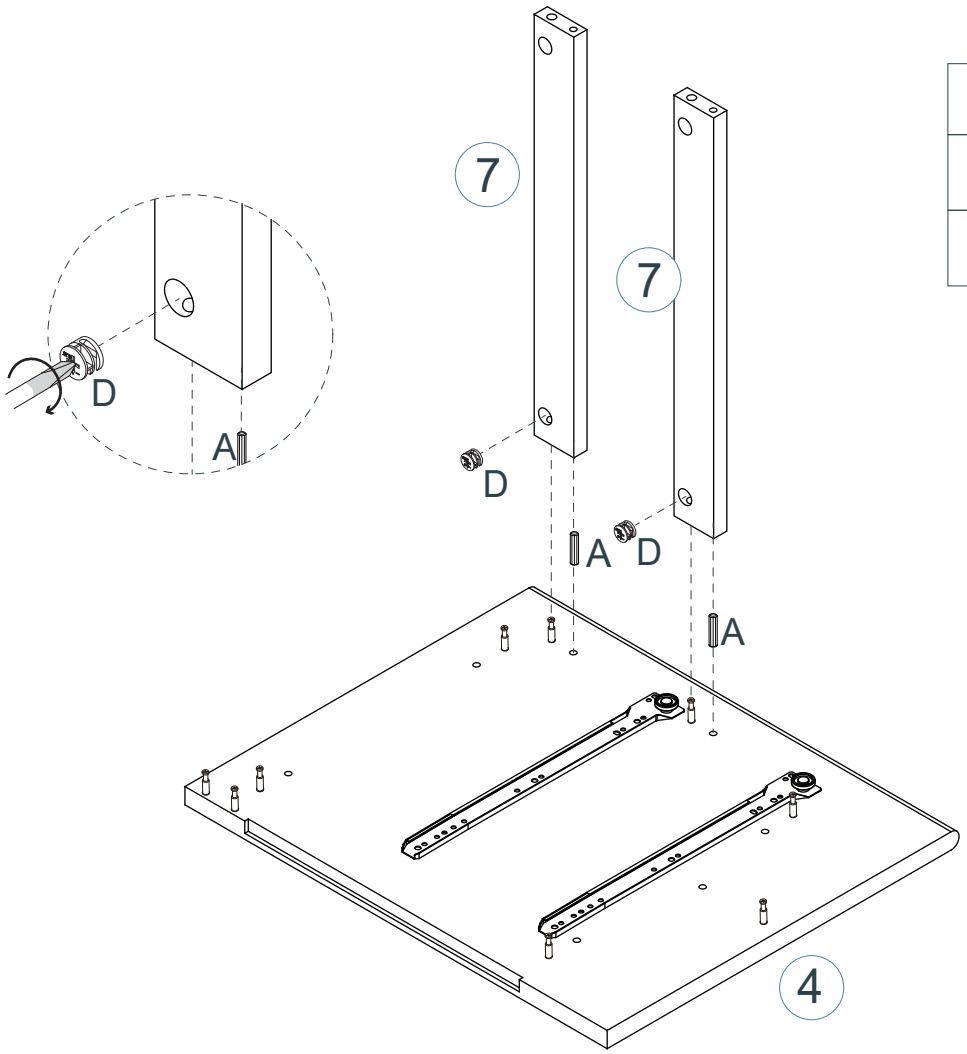

Hardware Needed		
D		X2
A		X2

Step 4

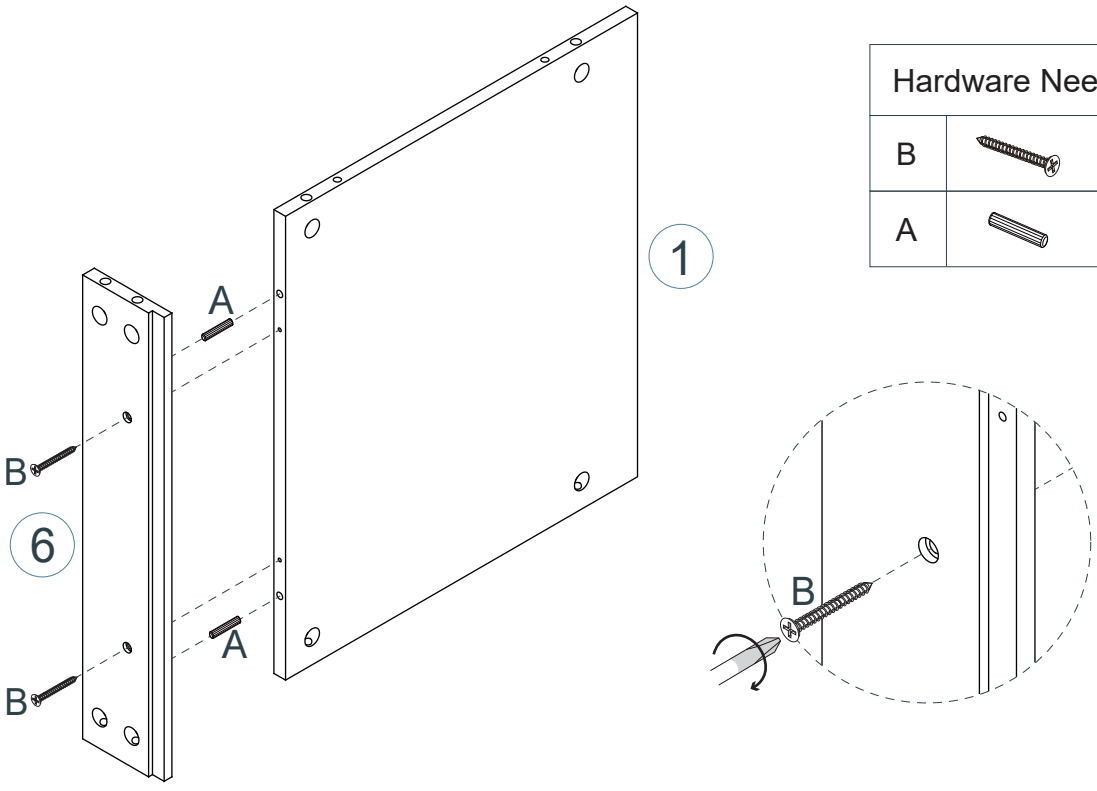

Hardware Needed		
B		X2
A		X2

Step 5

Hardware Needed		
C		X2

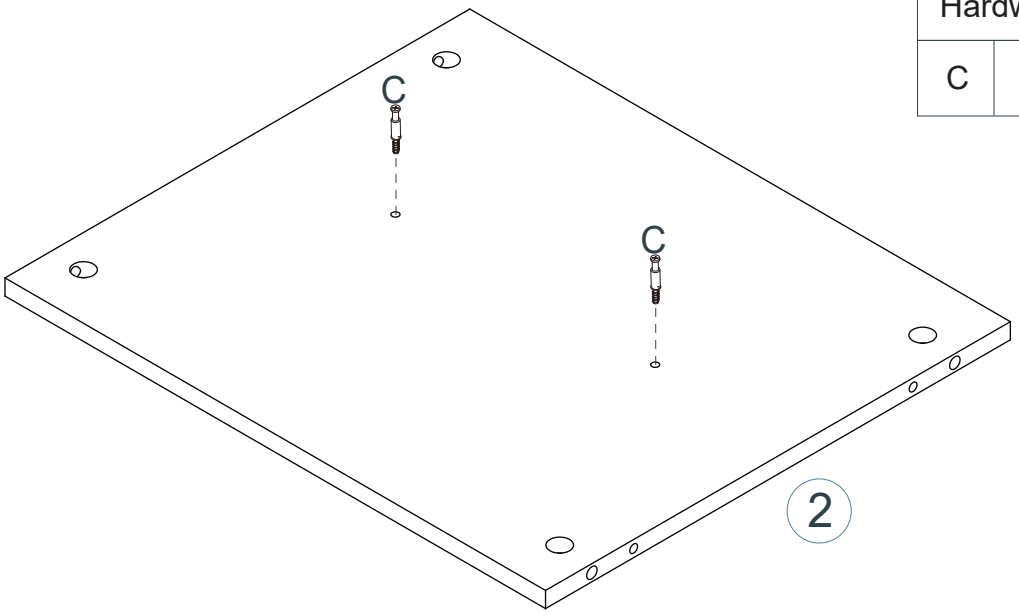

Step 6

Hardware Needed		
D		X2

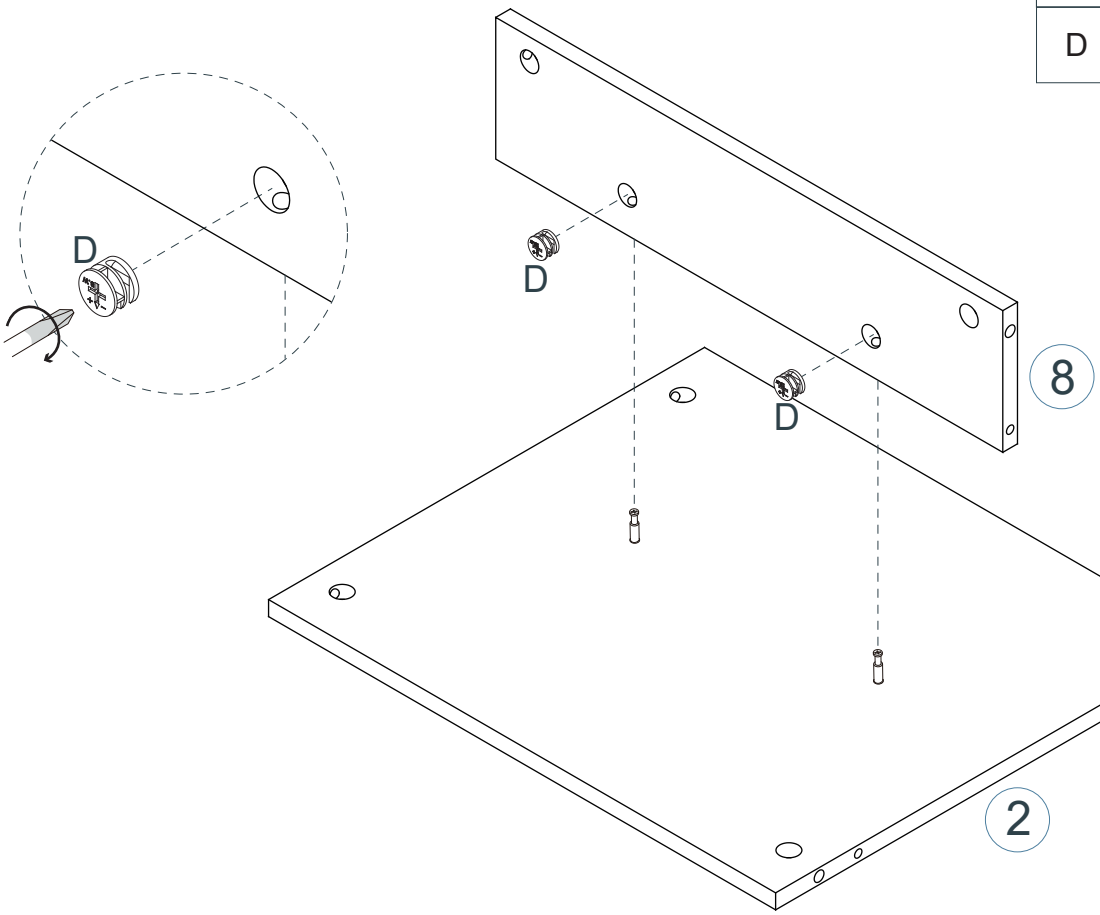

Step 7

Hardware Needed		
D		X7
A		X5

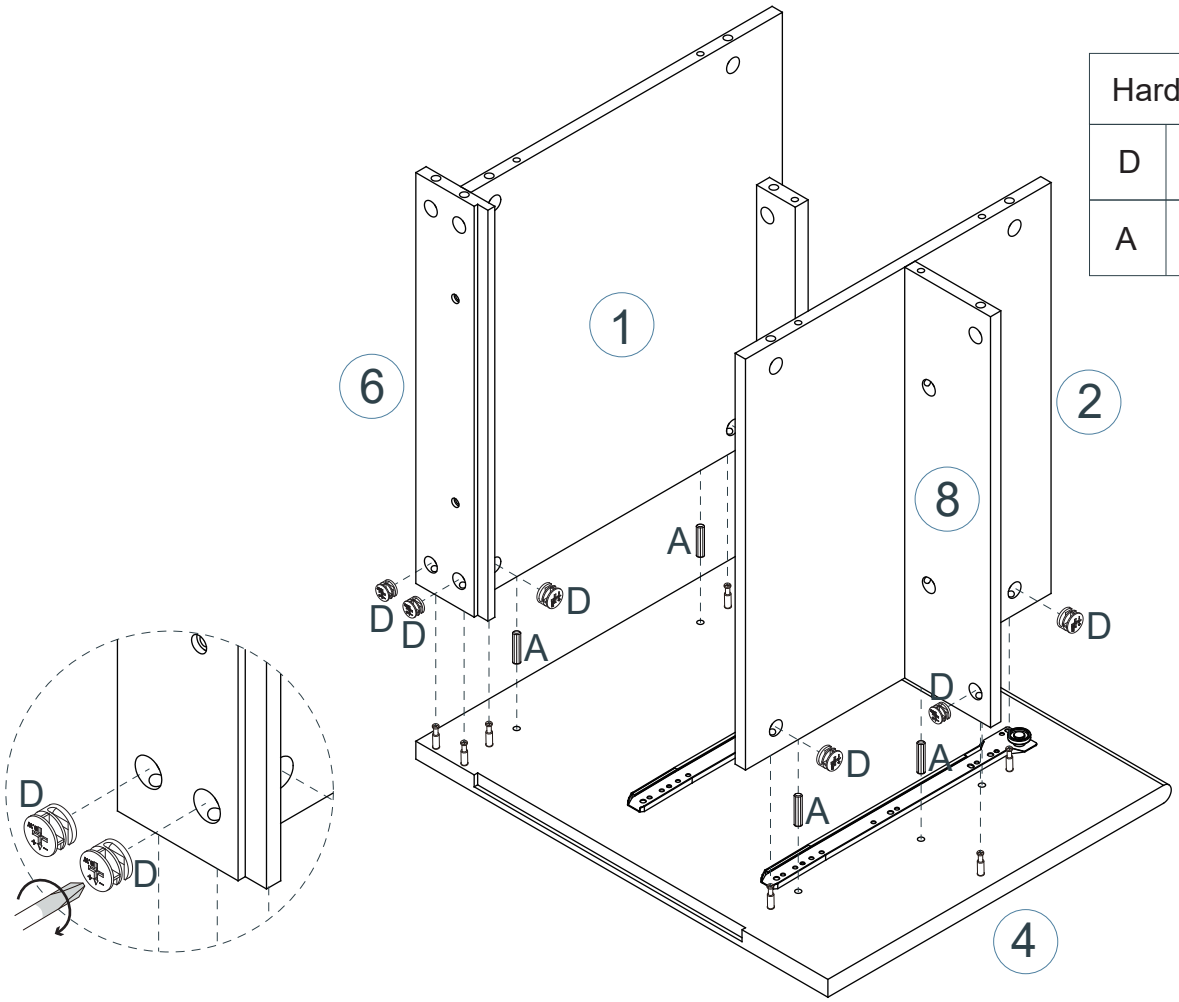

Step 8

Hardware Needed		
A		X7

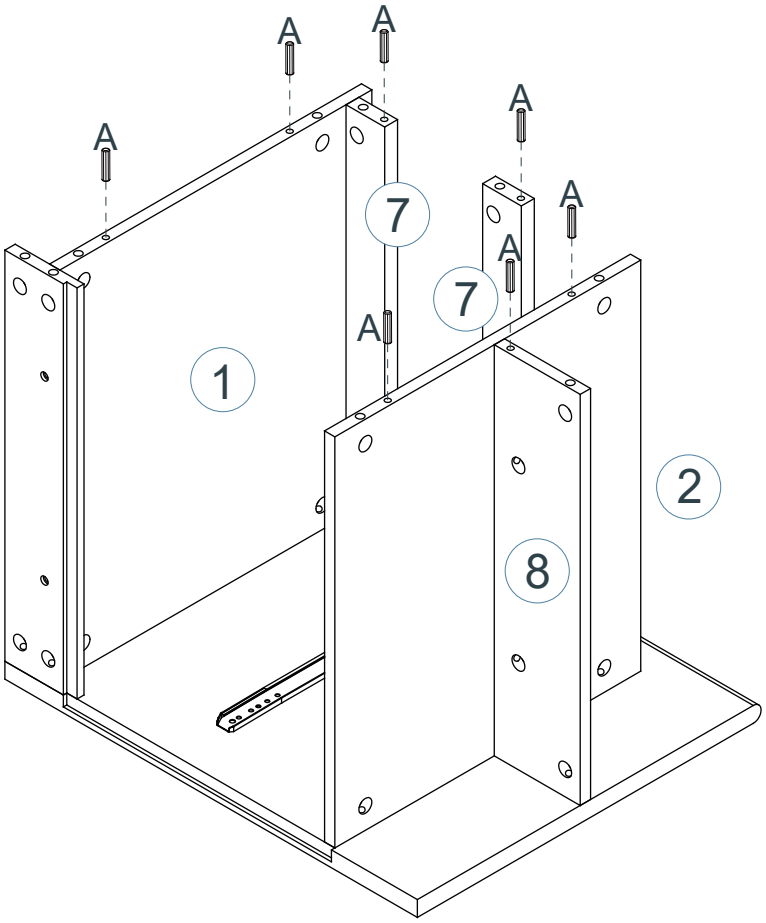

Step 9

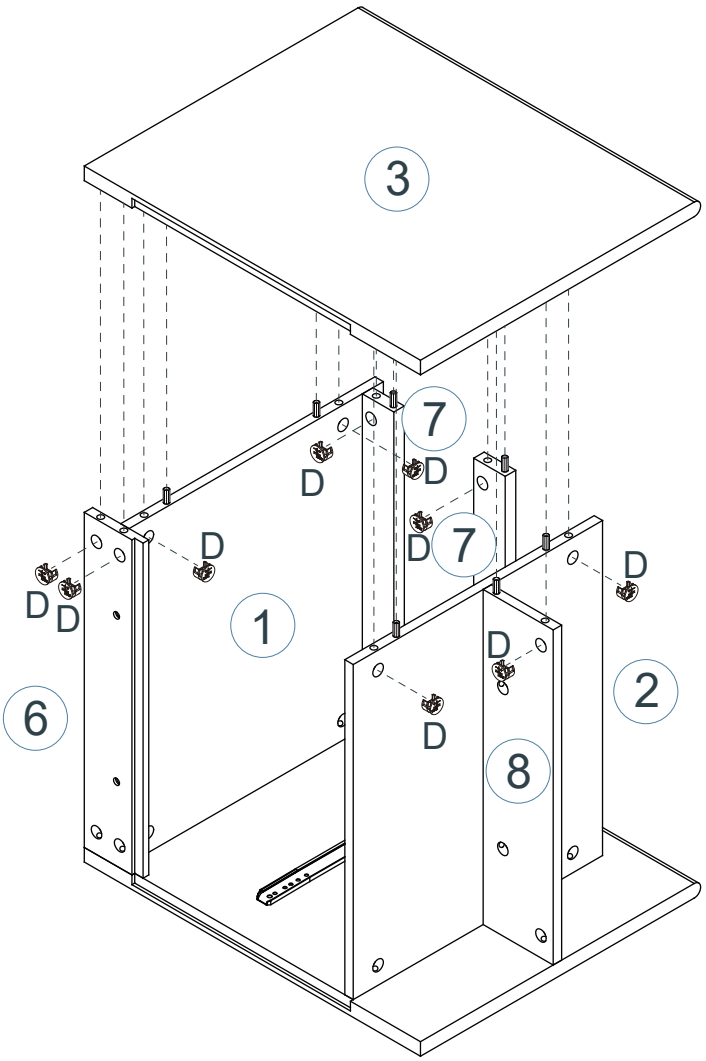

Hardware Needed		
D		X9

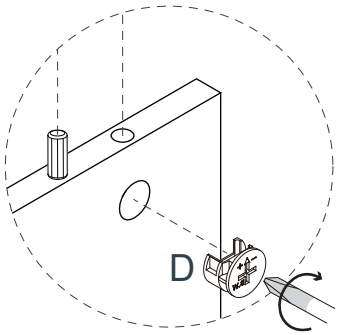

Step 10

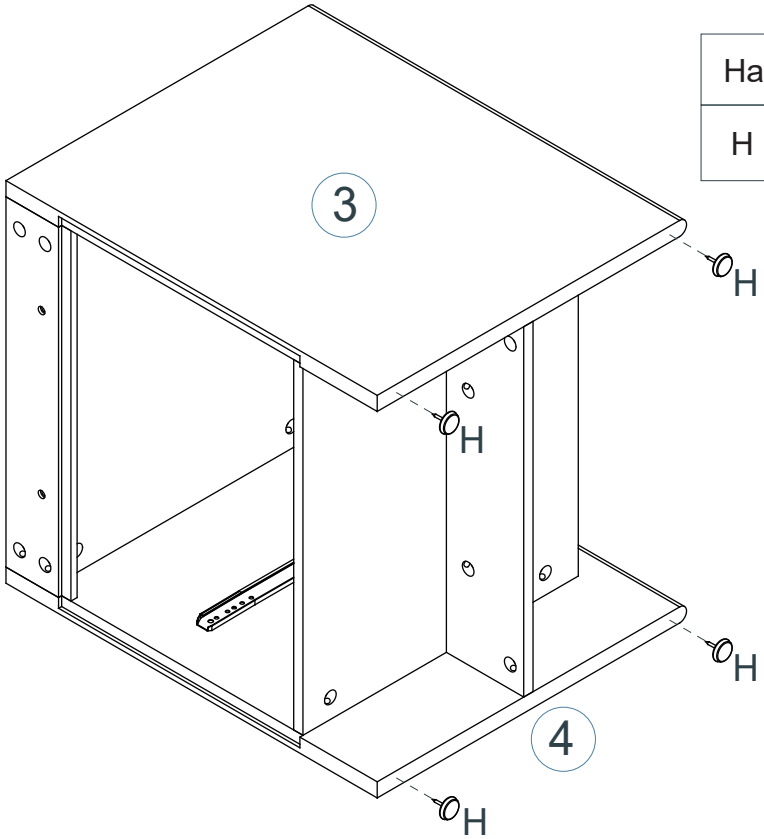

Hardware Needed		
H		X4

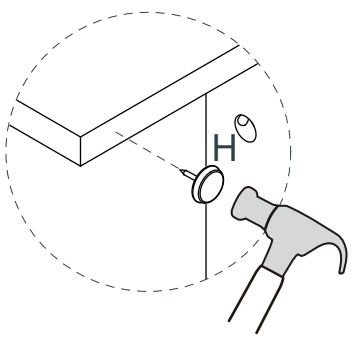

Step 11

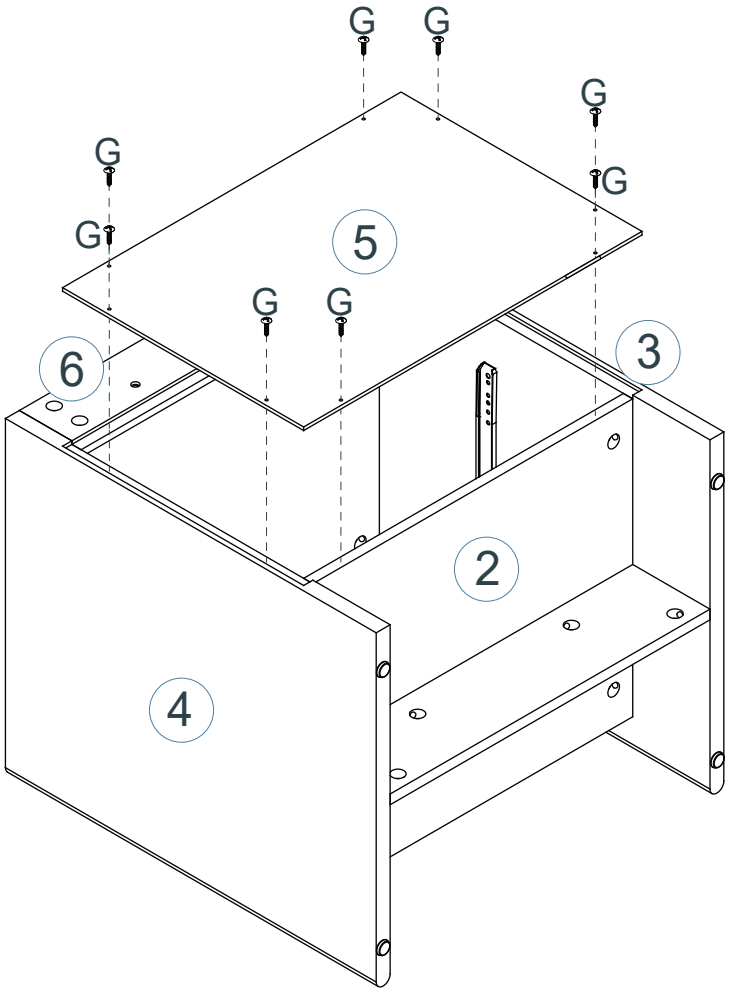

Hardware Needed		
G		x8

Step 12

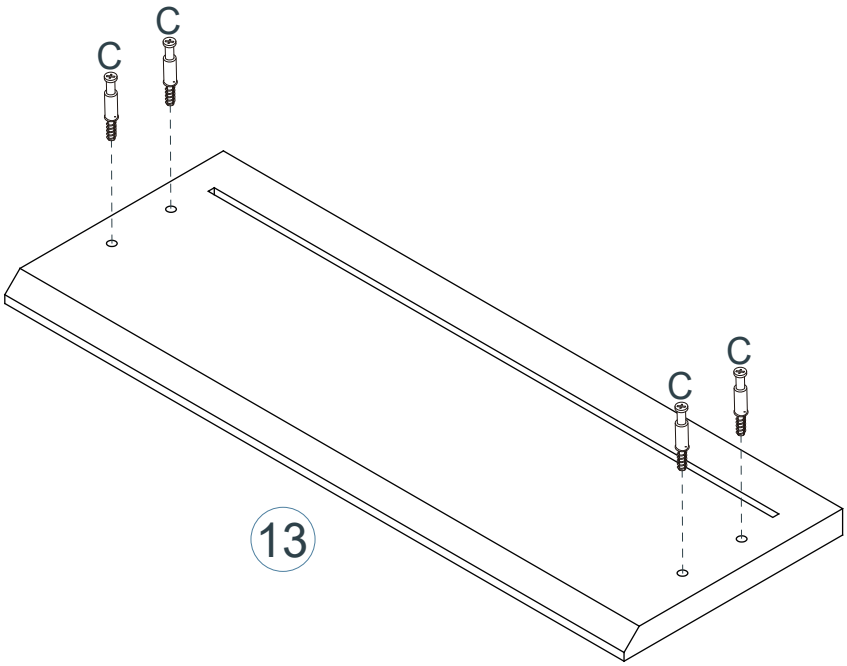

Hardware Needed		
C		X8

X2

Step 13

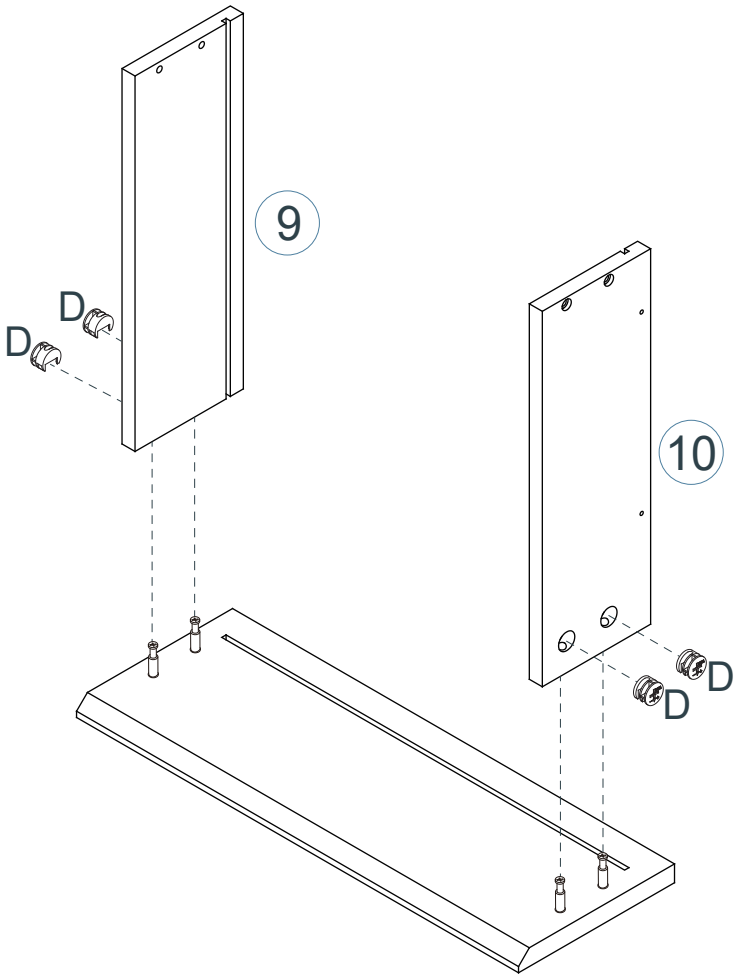

Hardware Needed		
D		X8

X2

Step 14

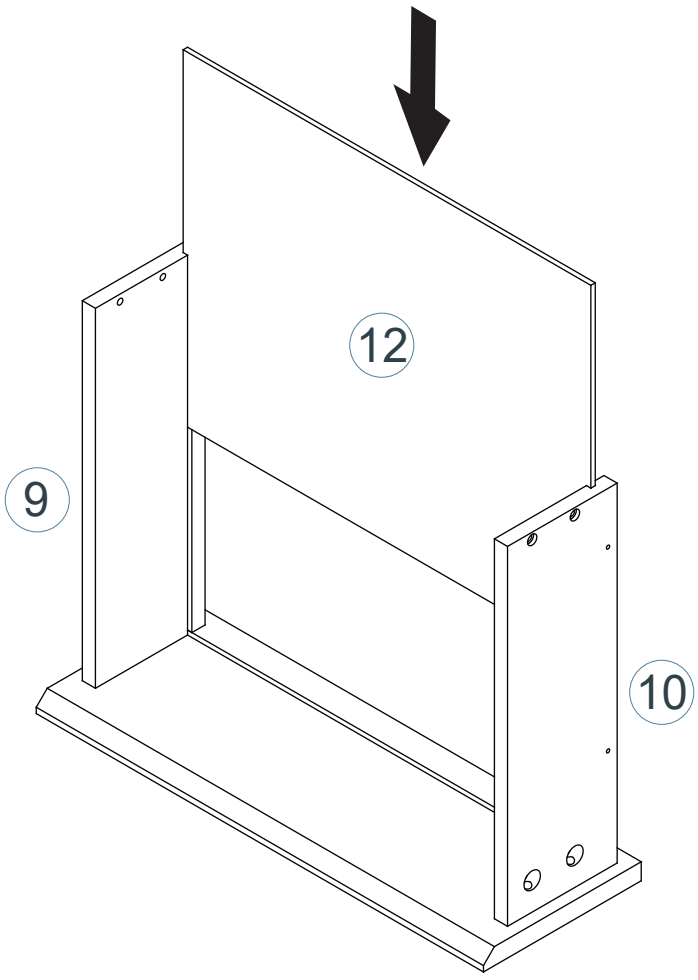

X2

Step 15

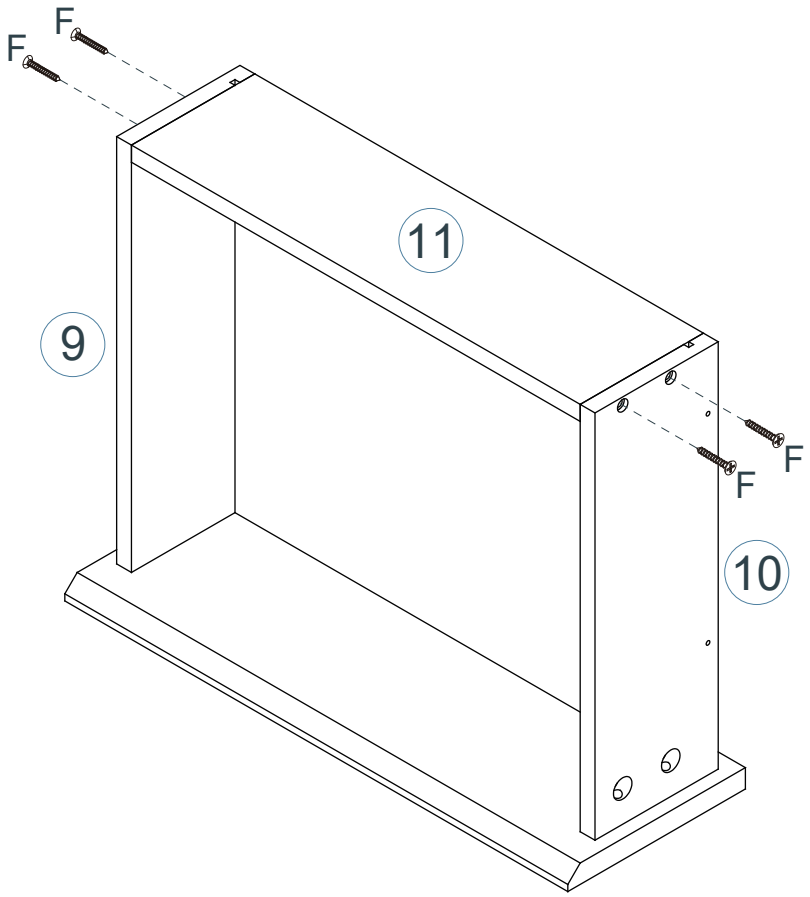

Hardware Needed		
F		X8

X2

Step 16

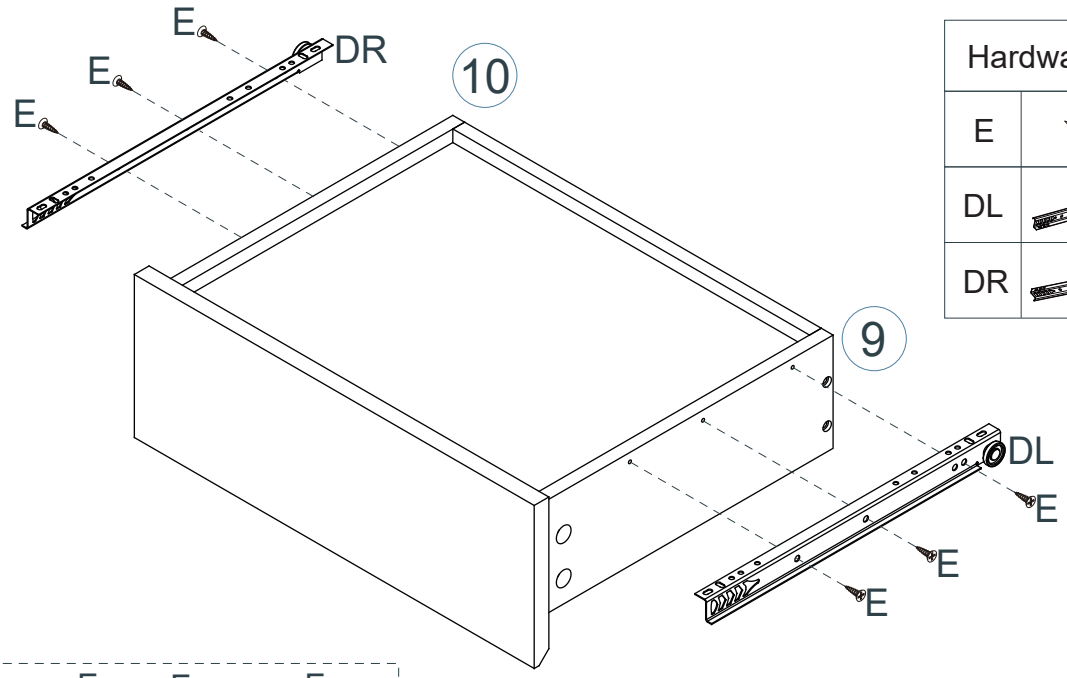

Hardware Needed		
E		X12
DL		X2
DR		X2

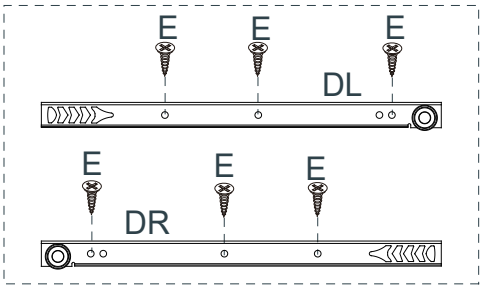

X2

Step 17

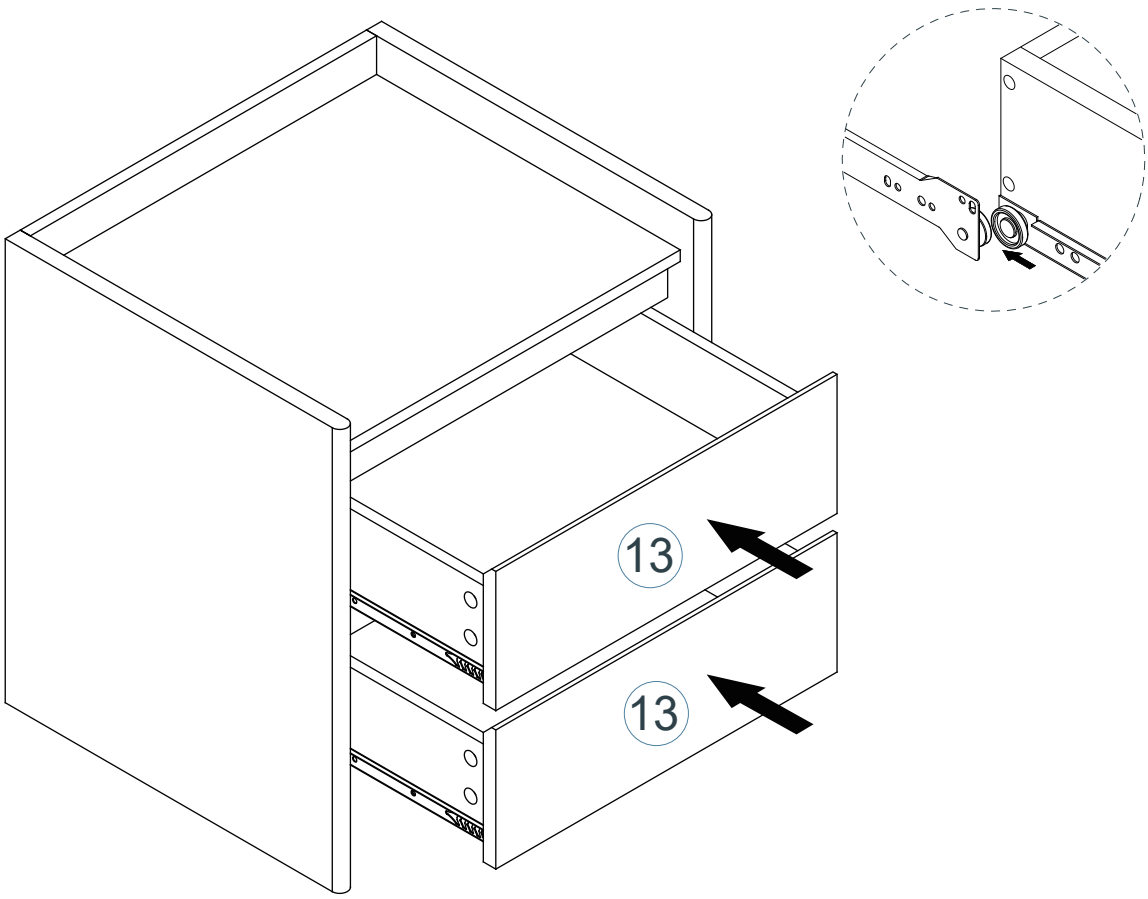

Step 18

