ASSEMBLY INSTRUCTIONS

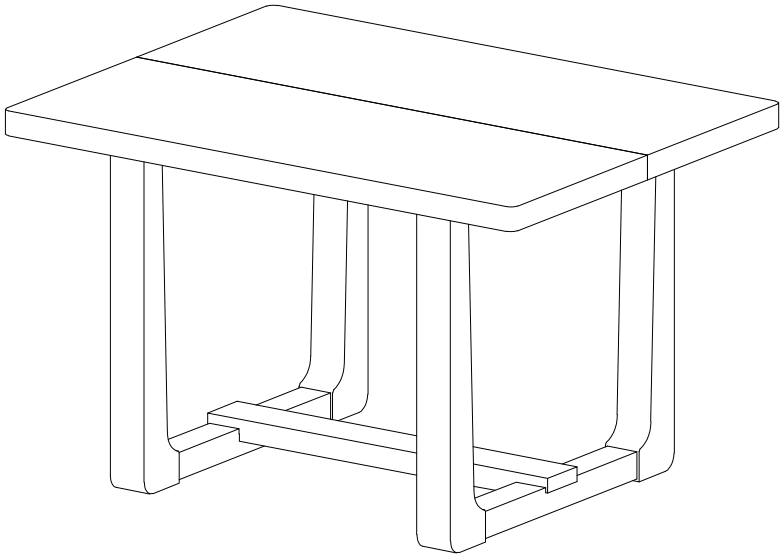

TOOLS REQUIRED

Screwdriver
(Not included)

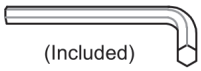

Allen Wrench

2 - People

ASSEMBLY RATING

EASY ——► DIFFICULT

The Assembly Rating is a 5-point system showing the level of effort needed to assemble a specific product.

CHECK BEFORE STARTING

- [ ] **Are you missing anything?**

  Double-check all parts, hardware and accessories listed are all acccounted for.

- [ ] **Should we send any replacements?**

  Are there any irregularities or flaws in the parts? We can send replacements!

- [ ] **Check out our Quick Tips!**

  We recommend reviewing the pre-assembly handouts. Even experts need a refresher now and then!

- [ ] **Prep Time!**

  Please review the assembly instructions and all diagrams prior to assembling.

PRE ASSEMBLY INTRODUCTION

We understand building ready-to-assemble furniture can be a challenging experience for some. To help avoid confusion, we have provided some helpful tips that may speed up the process.

Teamwork

ALWAYS have at least two people to help with transporting and assembling the product to avoid potential injury and/or damage.

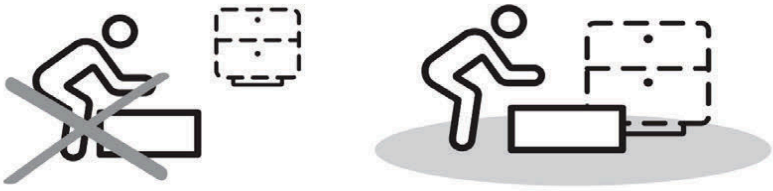

Suitable Location

Assembling near the area of the intended location is highly recommended.

Sufficient Space

Make sure you have enough space to move around during the assembly.

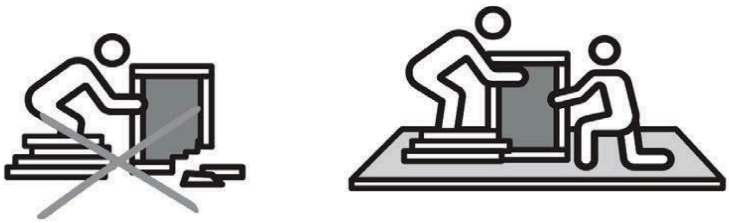

Avoid Scratches

Use cardboard, blankets or a carpeted area while assembling furniture to prevent to prevent scratches and damages.

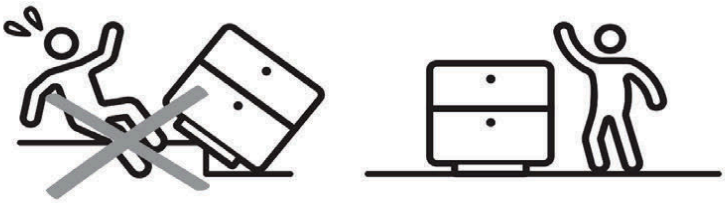

Flat Surface

Make sure the furniture rests on a flat and level surface with each leg evenly touching the floor.

ASSEMBLY AND CARE ADVICE

FAILURE TO FOLLOW THE GUIDELINES BELOW MAY RESULT IN INJURY AND/OR PROPERTY DAMAGE.

Position each part correctly and insert screws or bolts into their respective holes.

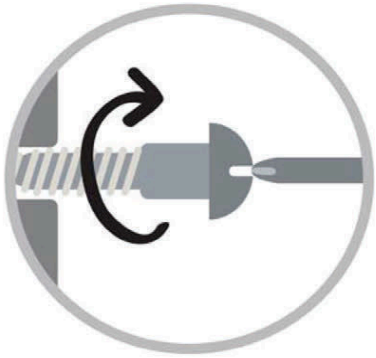

Turn clockwise to tighten and only tighten when step is completed or when instructed to do so.

Use the appropriate hand tools or power tools for assembly. Select steps, such as tightening screws and/or bolts, may require hand tools to avoid causing damage during assembly.

Save the instructions and store any supplied tools for later maintenance.

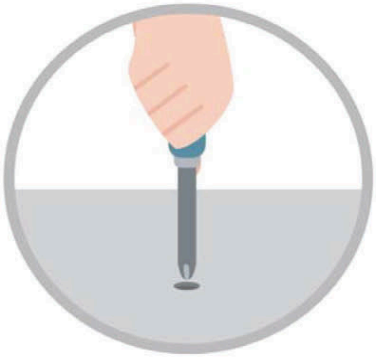

After two weeks, check and tighten any loose hardware and repeat again every six months thereafter.

IT IS THE USER'S RESPONSIBILITY TO MAINTAIN THE FURNITURE. THE HARDWARE MAY LOOSEN OVER TIME AND MAY CAUSE THE FURNITURE TO BE WOBBLY AND UNABLE TO SUPPORT ITS INTENDED WEIGHT CAPACITY. THIS MAY LEAD TO COLLAPSE AND MAY CAUSE SERIOUS INJURY.

DINING TABLE

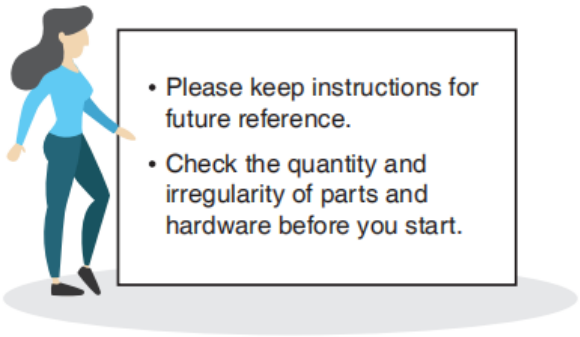

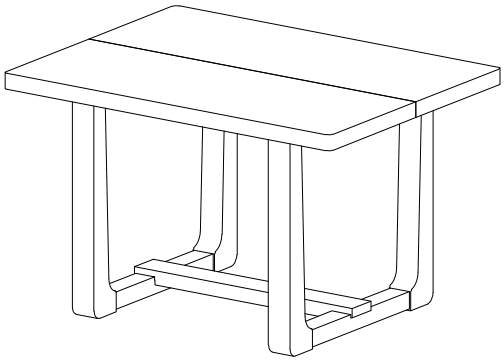

PARTS

1

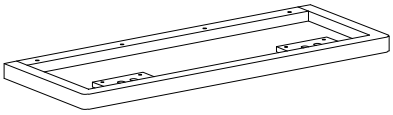

TOP
2 pcs.

2

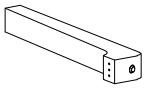

LEGS
4 pcs.

3

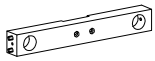

RAILS
2 pcs.

4

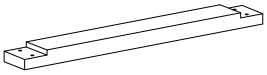

STRETCHER
1 pc.

5

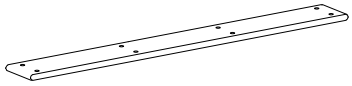

LONG CONNECTOR
1 pc.

6

SHORT CONNECTOR
4 pcs.

HARDWARE

A

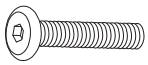

BOLT
Ø5/16" x 2-1/2"
4 pcs.

B

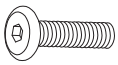

BOLT
Ø5/16" x 1-3/8"
32 pcs.

C

SPRING WASHER
Ø5/16"
36pcs.

D

FLAT WASHER
Ø5/16"
36 pcs.

E

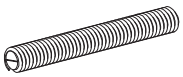

THREADED PINS
Ø5/16" x 3"
4 pcs.

F

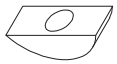

HALF MOON
Ø5/16"
4 pcs.

G

HEX NUT
5/16" x 1/2"
4 pcs.

H

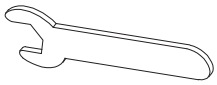

WRENCH
3-1/2" x 1/2"
1 pc.

I

ALLEN WRENCH
M5
1 pc.

J

WOOD DOWELS
Ø10" x 30MM
11 pcs.

ASSEMBLY INSTRUCTIONS

1

DO NOT FULLY TIGHTEN ALL BOLTS UNTIL ASSEMBLY IS COMPLETED.

Part 2 x4pcs
Part 3 x2pcs
Hardware E x4pcs
Hardware F x4pcs
Hardware G x4pcs
Hardware H x1pc
Hardware J x8pcs

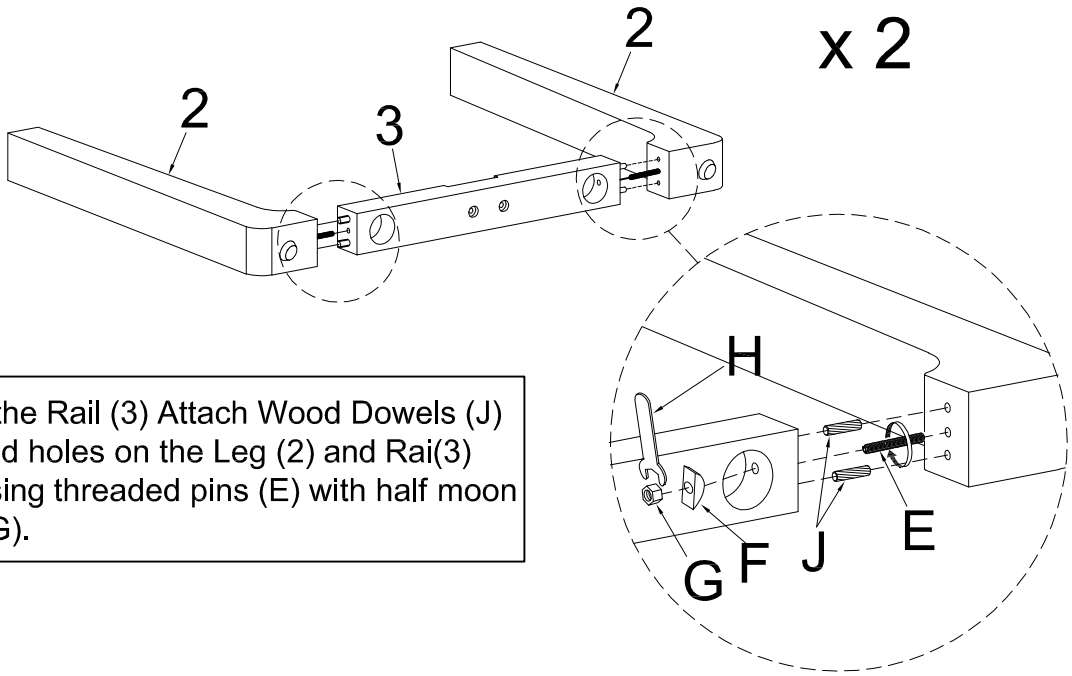

Align Legs (2) to the Rail (3) Attach Wood Dowels (J) into the designated holes on the Leg (2) and Rai(3) then secure by using threaded pins (E) with half moon (F) and hex nut (G).

2

Part 6 x4pcs
Hardware B x8pcs
Hardware C x8pcs
Hardware D x8pcs
Hardware I x1pc

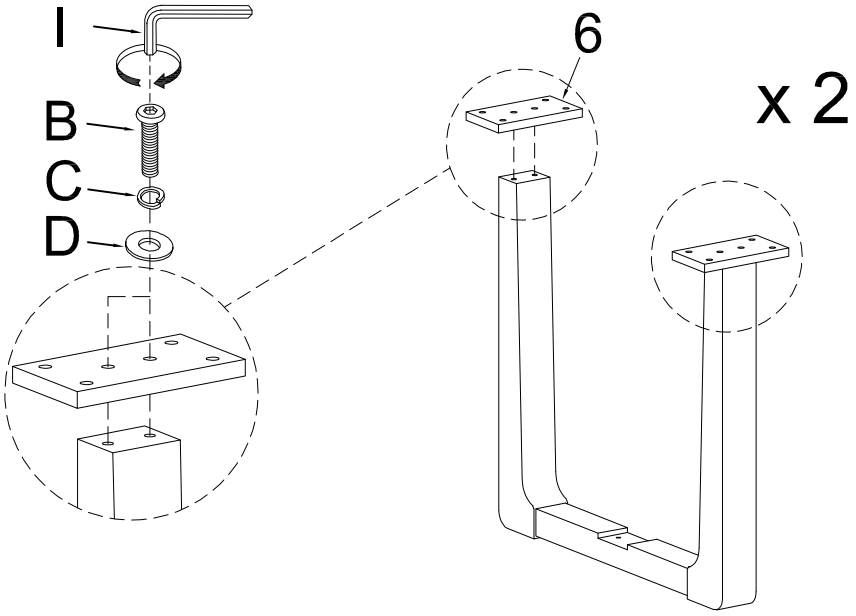

Align Short connector (6) to the Leg (2) then secure by using bolt (B) with Spring washer (C) and flat washer(D)

ASSEMBLY INSTRUCTIONS

3

Part 4 x1pc
Hardware A x4pcs
Hardware C x4pcs
Hardware D x4pcs

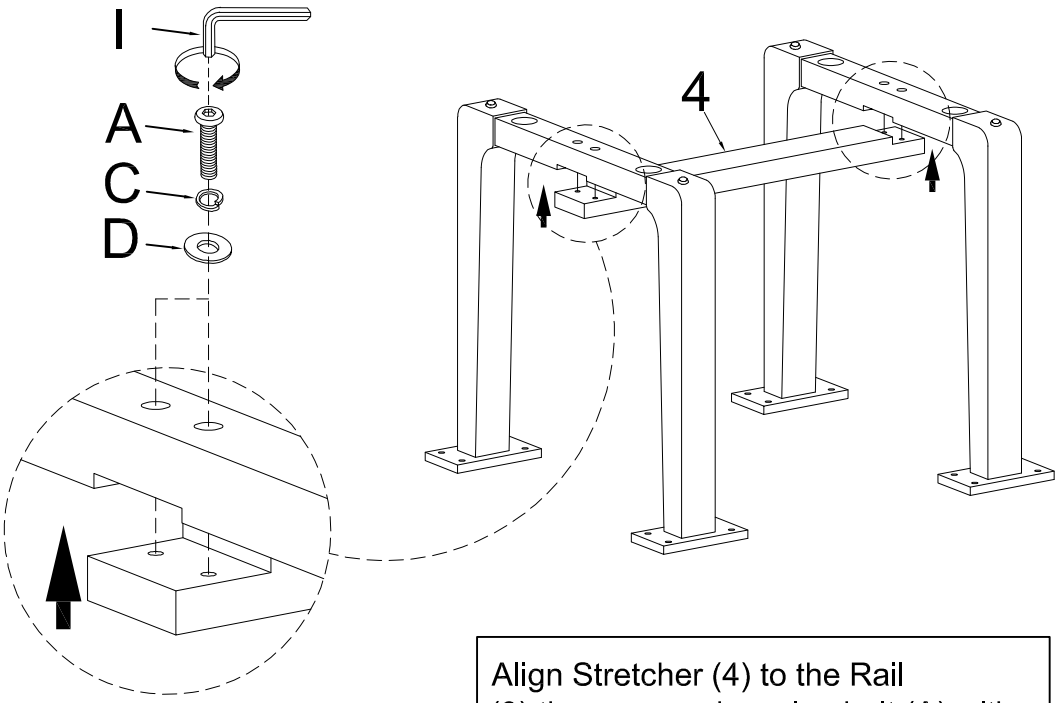

Align Stretcher (4) to the Rail (3) then secure by using bolt (A) with spring washer (C) and flat washer(D).

4

Part 1 x2pcs
Hardware J x3pcs

Align Attach Wood Dowels (J) into the designated holes on the two table tops (1)

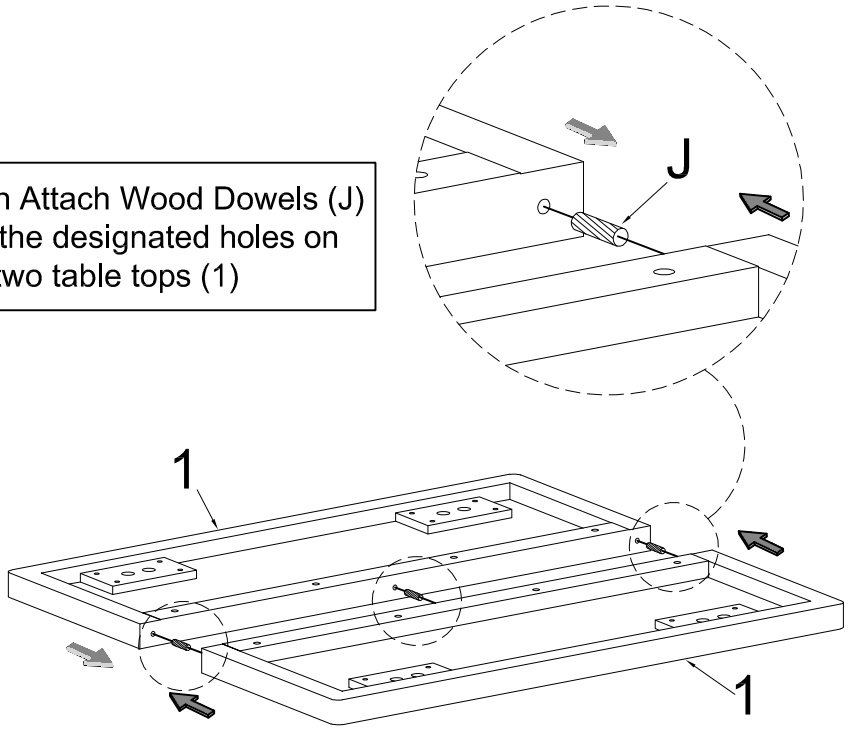

ASSEMBLY INSTRUCTIONS

5

Part 5 x1pc
Hardware B x2pcs
Hardware C x2pcs
Hardware D x2pcs

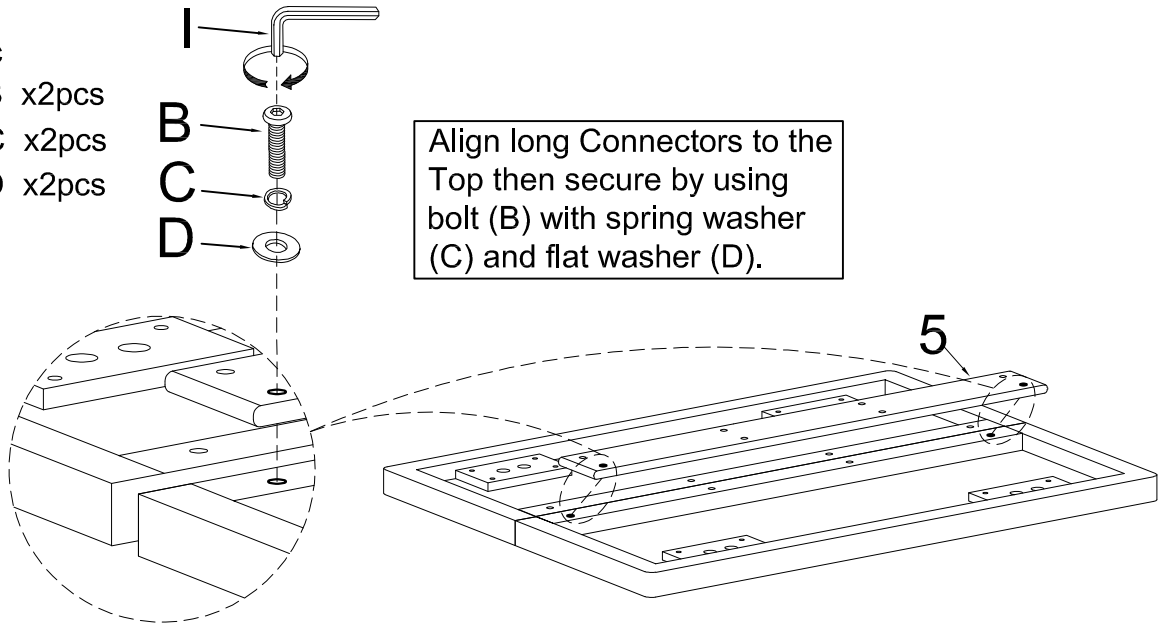

Align long Connectors to the Top then secure by using bolt (B) with spring washer (C) and flat washer (D).

Only tighten the 2 screws on the same side of the long board

6

Hardware B x6pcs
Hardware C x6pcs
Hardware D x6pcs

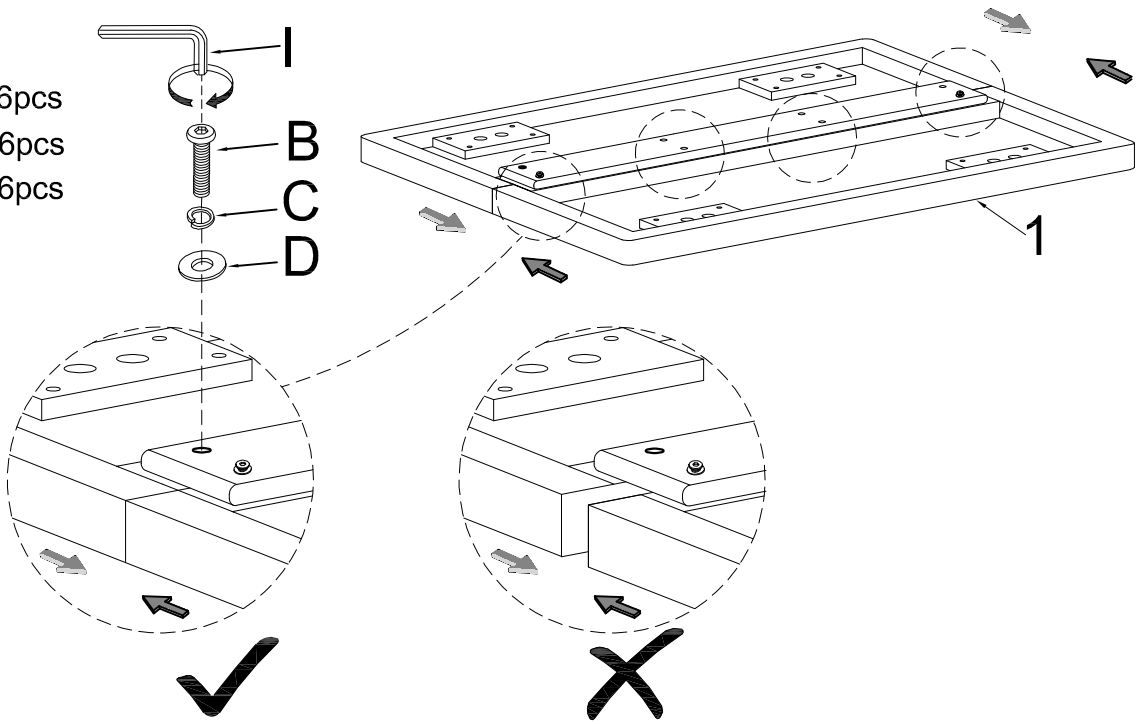

Use your hands to pull the two tabletops closer together until there is no gap left, then secure by using bolt (B) with spring washer (C) and flat washer (D).

ASSEMBLY INSTRUCTIONS

7

Hardware B x16pcs
Hardware C x16pcs
Hardware D x16pcs

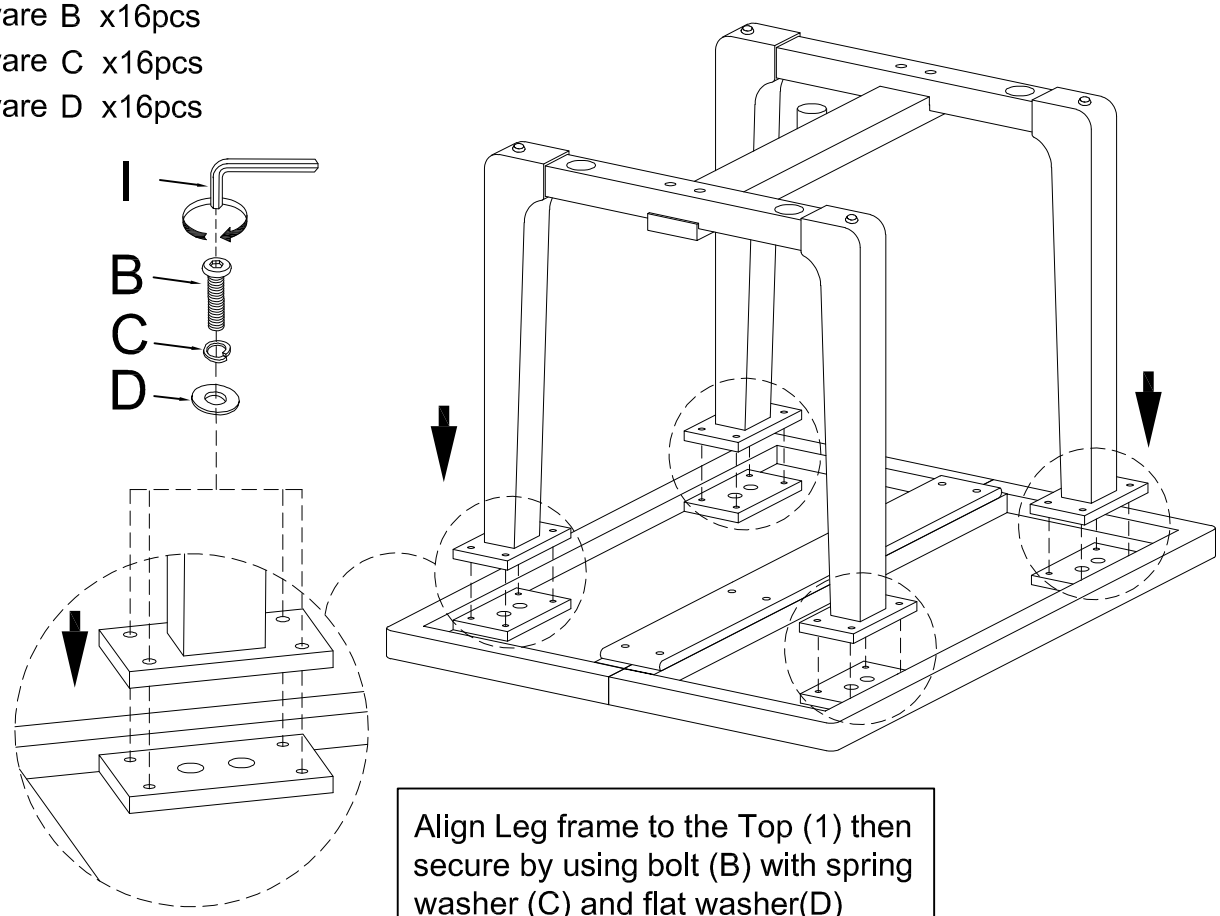

Align Leg frame to the Top (1) then secure by using bolt (B) with spring washer (C) and flat washer(D)

8

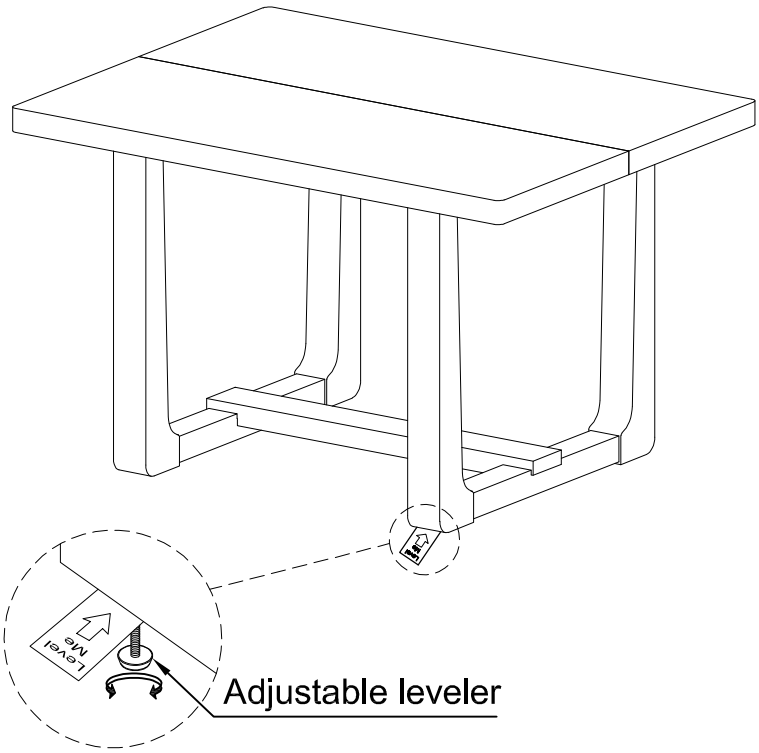

ASSEMBLY COMPLETED

Please ensure the furniture rests on an even and flat surface. If the product wobbles or feels loose, double-check all bolts and/or screws are properly tightened and secured.

Keep this handy!

Please retain this instruction manual and any order-related information for future reference.

Lift, don't drag!

To avoid damage to product please always LIFT the product when transporting of adjusting the placement.

This product is intended for RESIDENTIAL USE ONLY and not for commercial use.