Project Name: _____

Location: _____

Type: _____

Quantity: _____

Notes:

PRODUCT INFORMATION

Mounting Type: Wall
Finish: Black with Antique Brushed Brass
Diffuser: N/A

PRODUCT MEASUREMENTS

FIXTURE**	BACKPLATE / CANOPY**
Length:	Length:
Width: 5"	Width: 1"
Diameter	Diameter: 4.75"
Height: 9.5"	Height:
Extension: 8.5-11.5"	
Overall Height:	

TECHNICAL SPECIFICATIONS

SPECIFICATIONS

Frame Material: Steel
Diffuser Material: Steel
Lamping Type: SSL (Dedicated LED) Jbox: Standard
Lamping Base: SSL Lamp Wattage: 10 W
Lamp Quantity: 1 Total Wattage: 10 W
Voltage: 120v Lamps Included: Yes

QUALIFICATIONS

Location Rating Dry
Certification: ETL (US/Canada) Listed
ADA Compliant: No Energy Star: No
JA8 Compliant: No Emergency Lighting: No
Marine Grade Finish: No
Warranty**: 5 Year

PHOTOMETRICS

Dimmable: No Nominal Lumens: 900 Lm
CRI: 90 Delivered Lumens: N/A
CCT: 3000K
Recommended Dimmers:

ADDITIONAL NOTES

6' of clear cord included. Can be Hardwired or Used with Included Pin-up Kit; On/Off switch located on back plate

LINE DRAWING

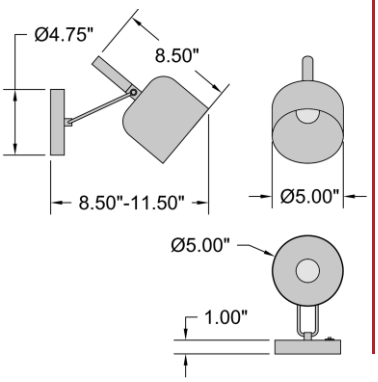

IES FILE

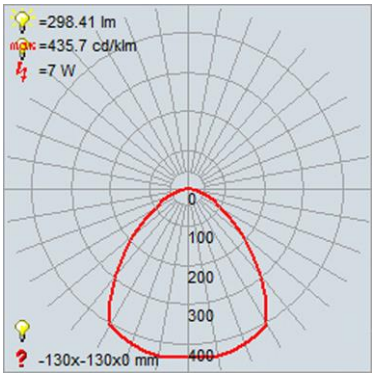

In addition to Access Lighting's purchase and warranty terms and conditions, by signing below or placing an order, you agree that you are authorized to bind the entity placing any order and acknowledge the following: All of sizes and measurements are approximate and all images are for illustrative purposes only. In the event of an inconsistency, the "Product Measurements" section controls. There also may be slight differences in the colors and designs compared to the displayed and printed images.

Signature: _____

Print Name: _____ Date: _____