ASSEMBLY INSTRUCTIONS

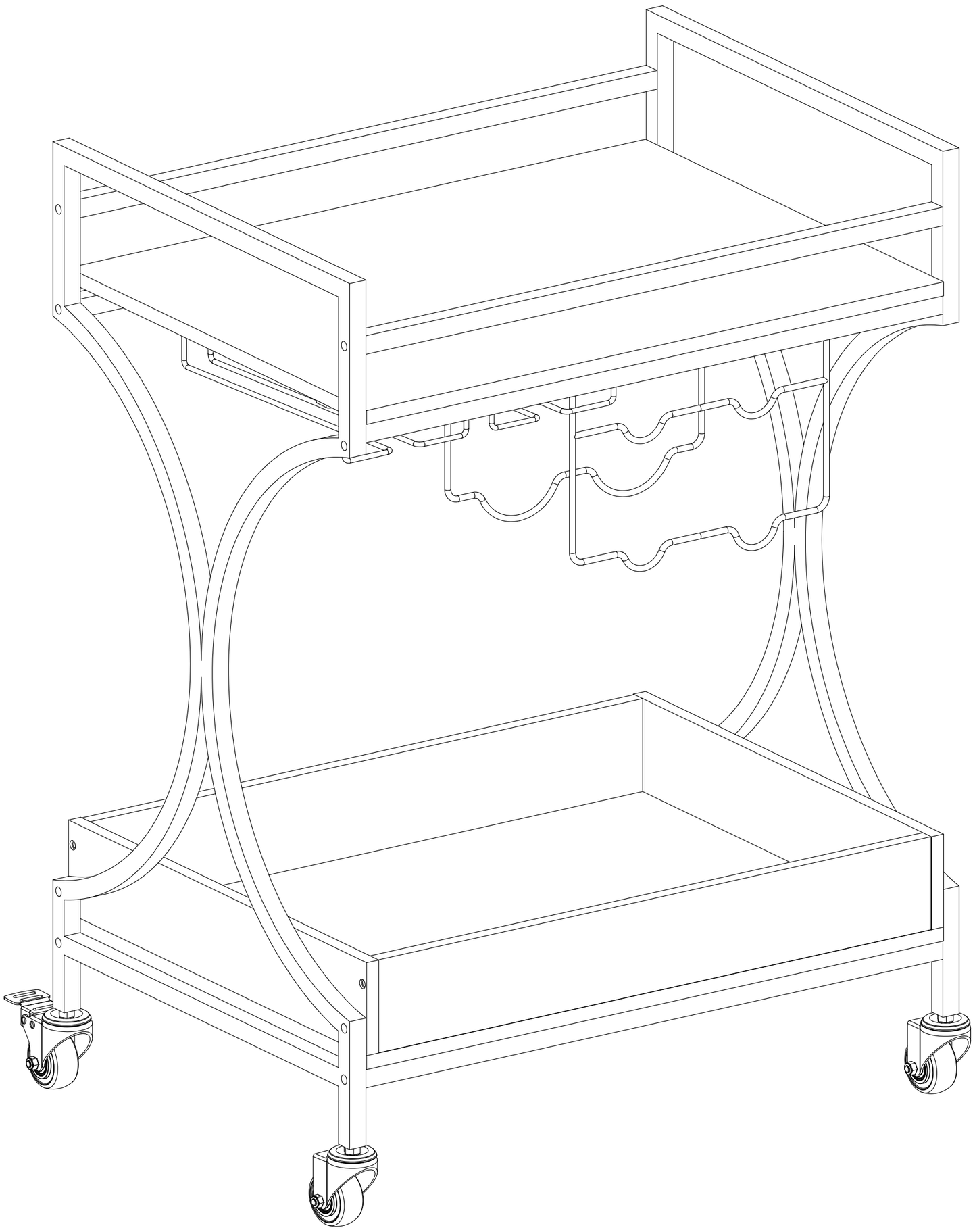

WARNING !

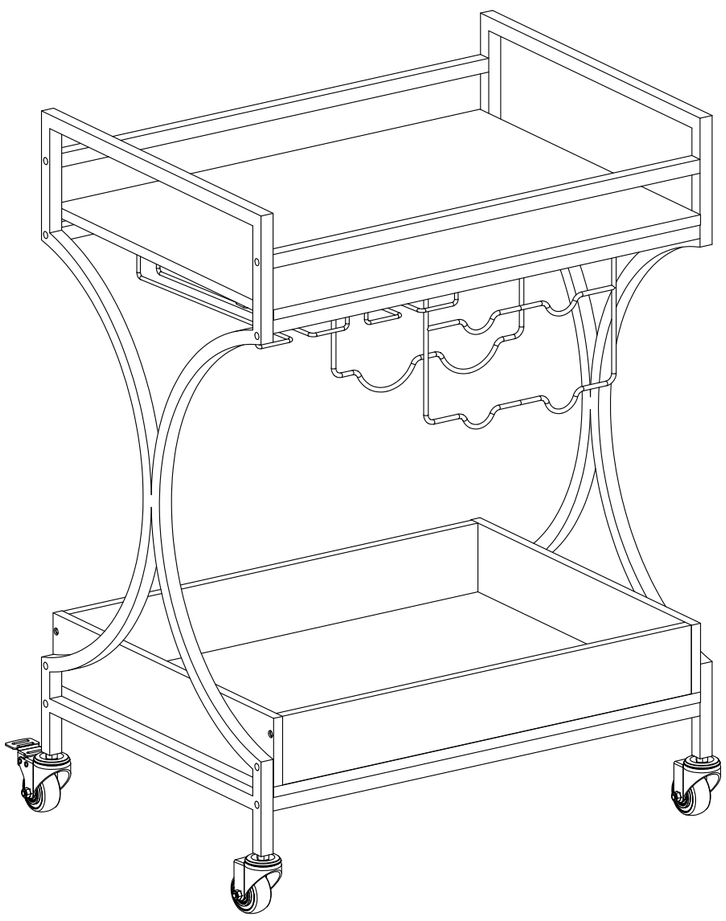



Estimated Time for Assembly

30 mins

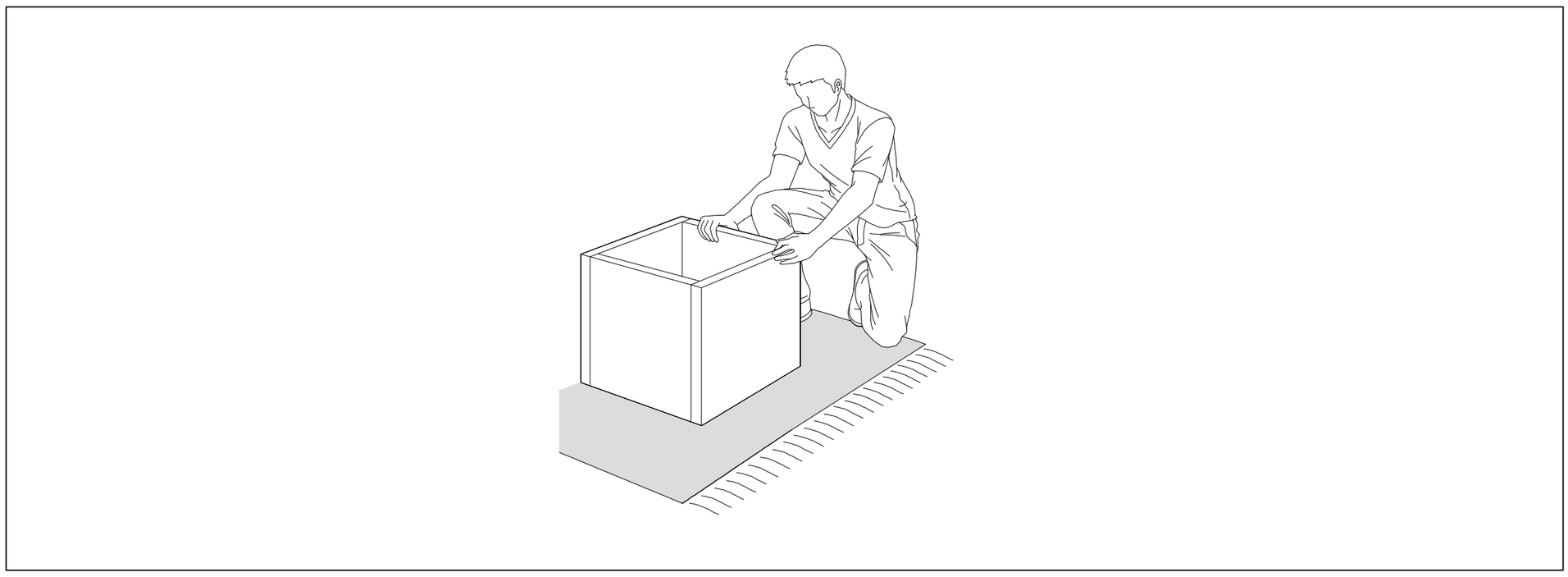

Assembly the furniture on empty carton, carpet, or rug to prevent scratches or damage.

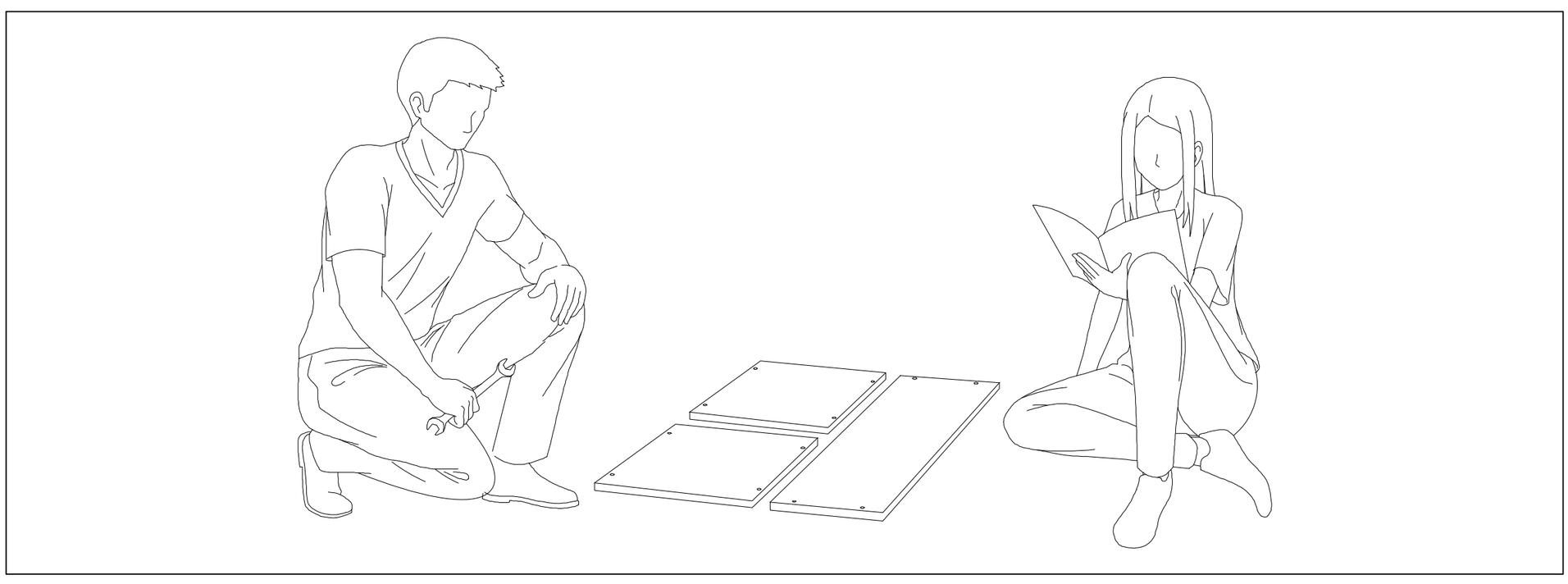

This furniture requires 2 people to assembly.

Make sure no parts are missing or damaged before assembly.

Board Identification

Not actual size

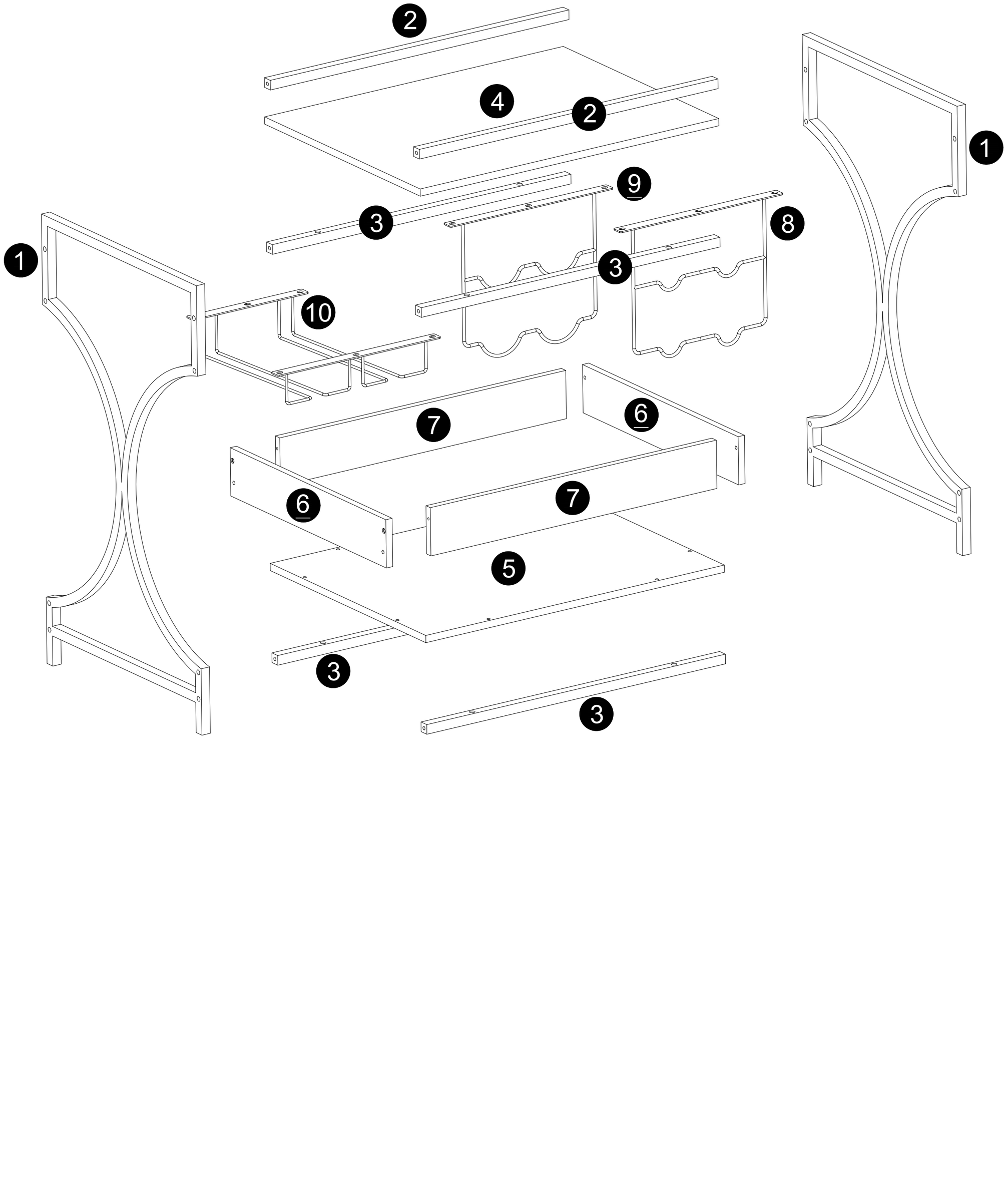

BOARD IDENTIFICATION

Not actual size

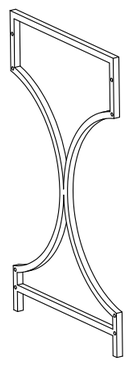

1 x2

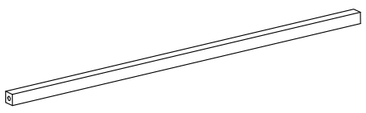

2 x2

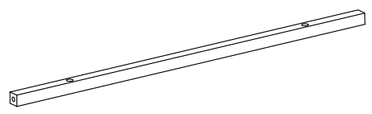

3 x4

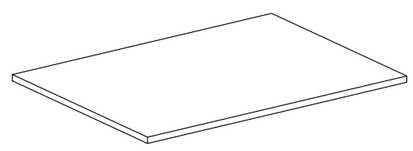

4 x1

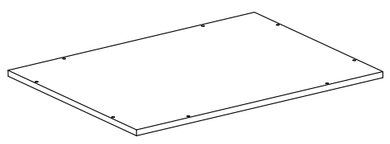

5 x1

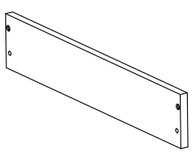

6 x2

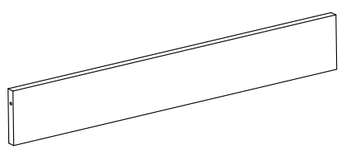

7 x2

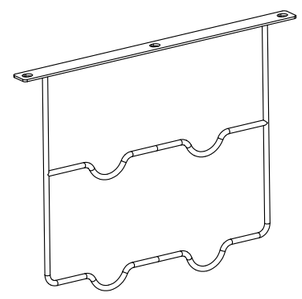

8 x1

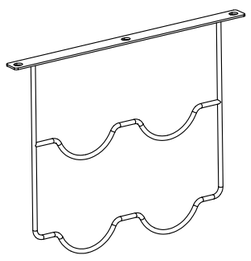

9 x1

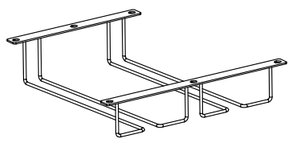

10 x1

HARDWARE LIST

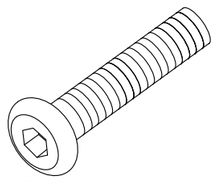

M6x35

A	x12+1

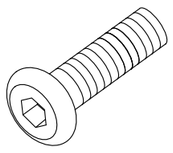

M6x23

B	x12+1

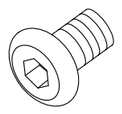

M6x10

C	x12+1

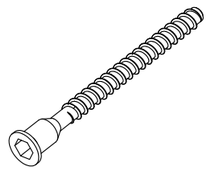

M5x40

D	x12+1

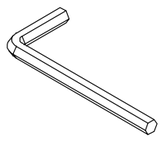

M3

E	x1



M4

F	x1

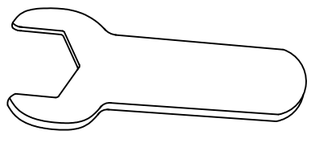

G	x1

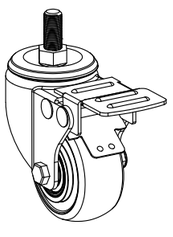

H	x2

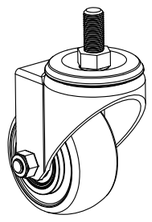

I	x2

Cam Lock Fastening System

Insert the cam bolt into the hole first, then insert the cam lock and lock it.

1

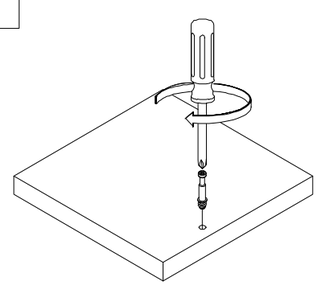

2

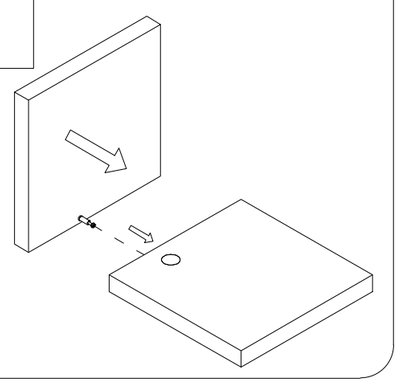

3

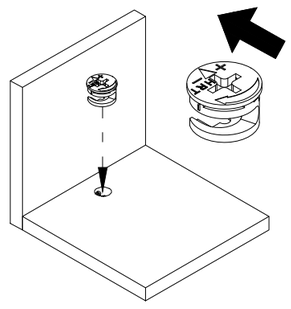

The opening must point toward the edge of the board

4

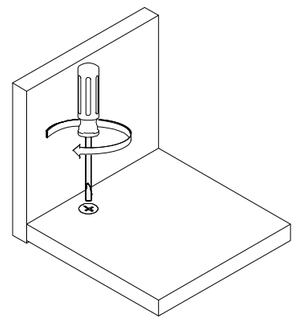

STEP 1

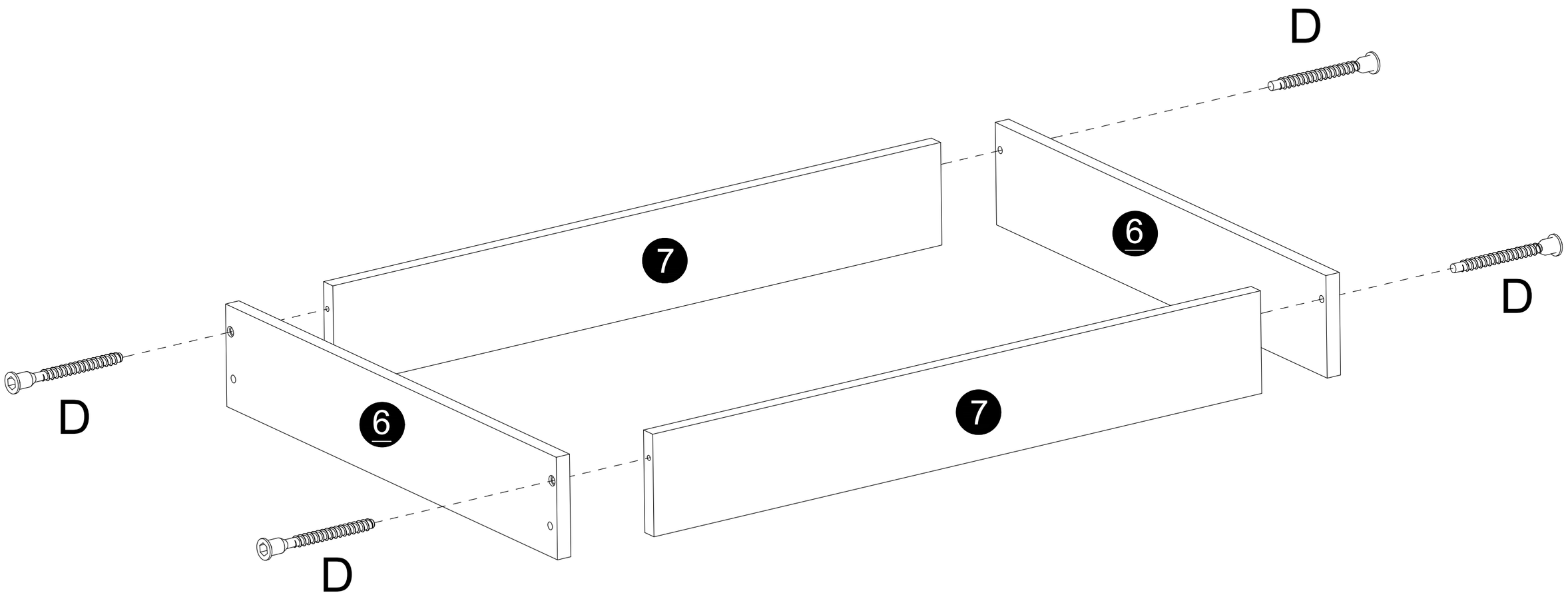

M5x40	
D	x 4

M3	
E	x 1

STEP 2

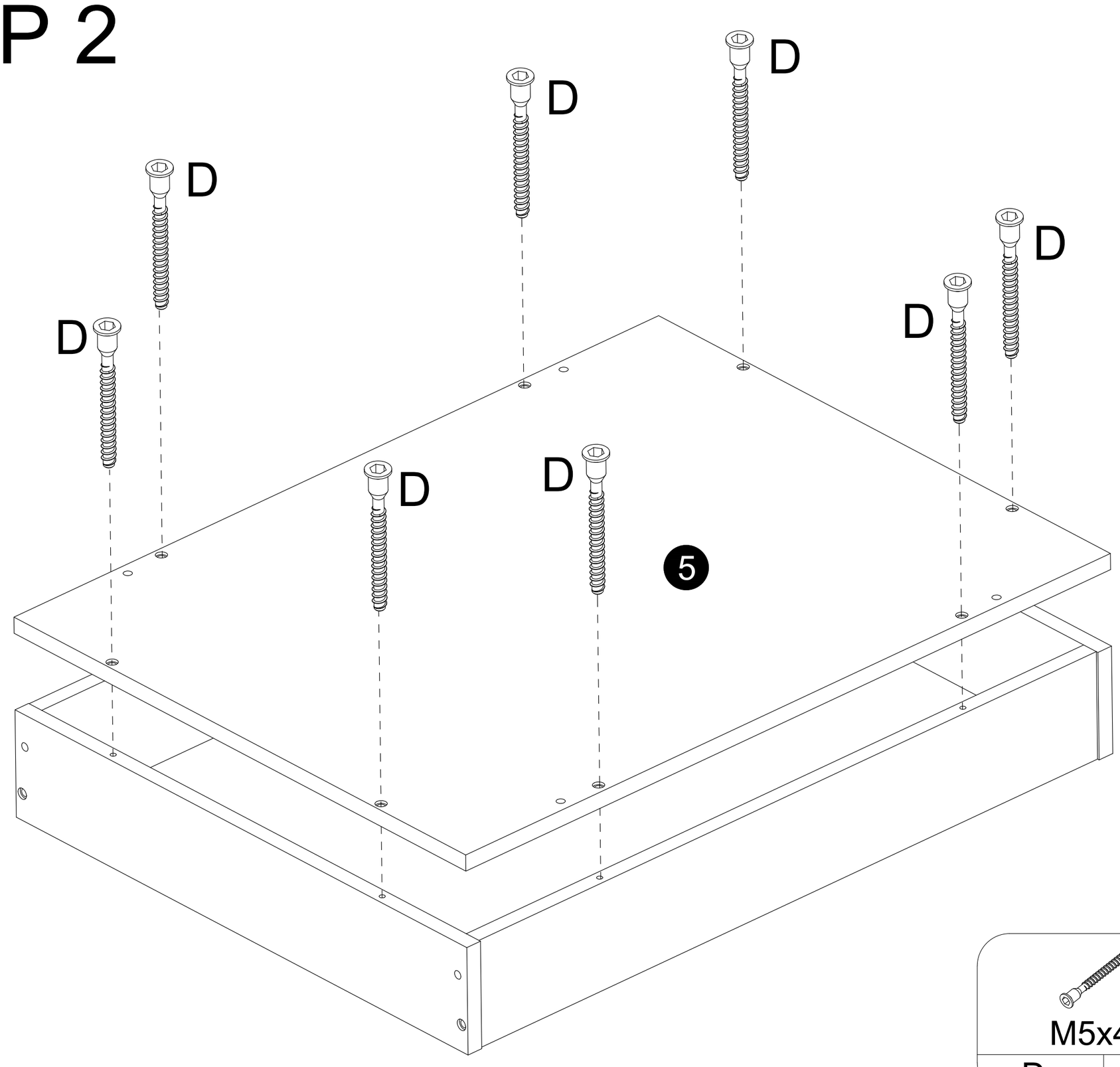

M5x40	
D	x 8

M3	
E	x 1

STEP 3

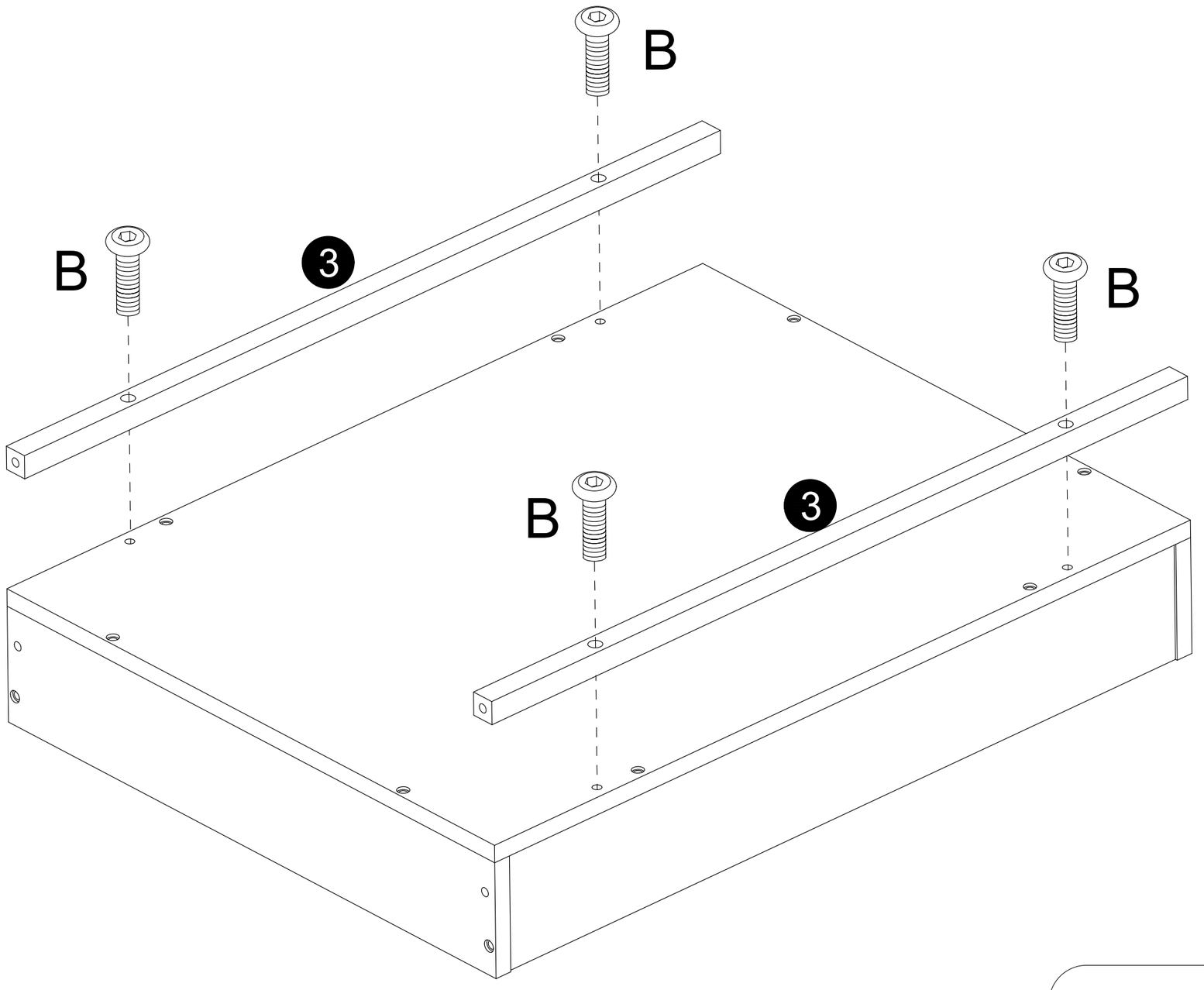

M6x23	
B	x 4

M4	
F	x 1

STEP 4

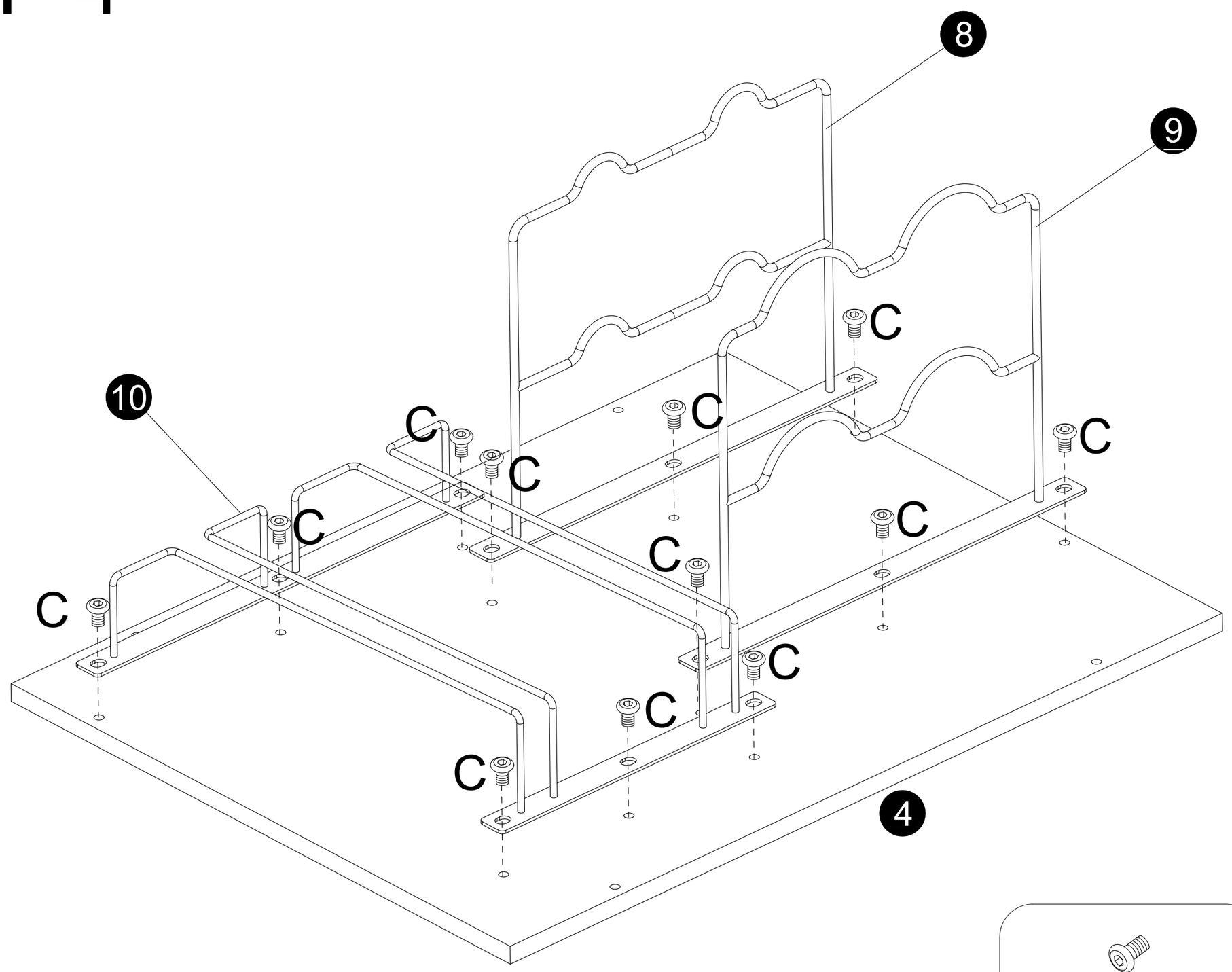

M6x10	
C	x 12

M4	
F	x 1

STEP 5

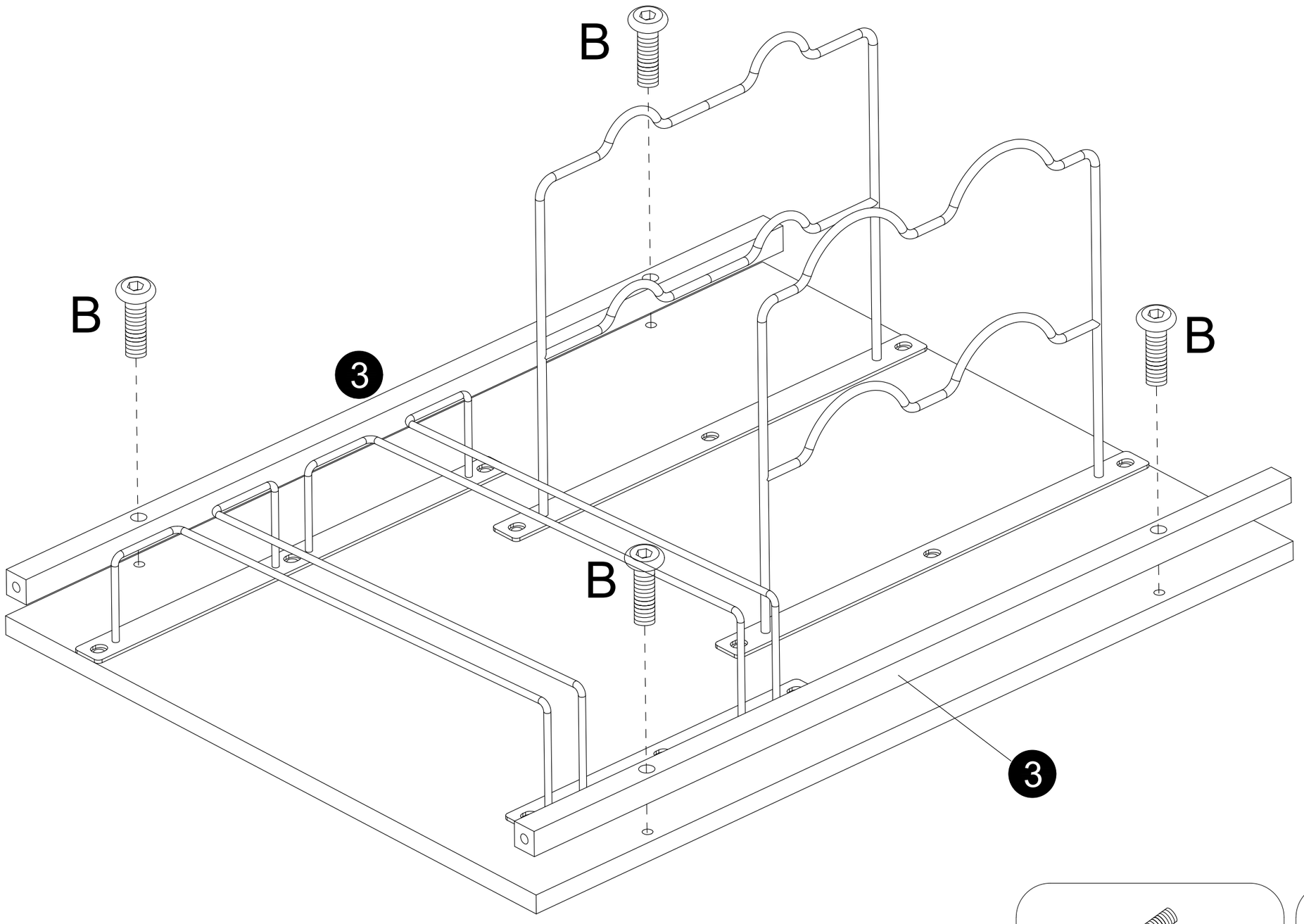

M6x23	
B	x 4

M4	
F	x 1

STEP 6

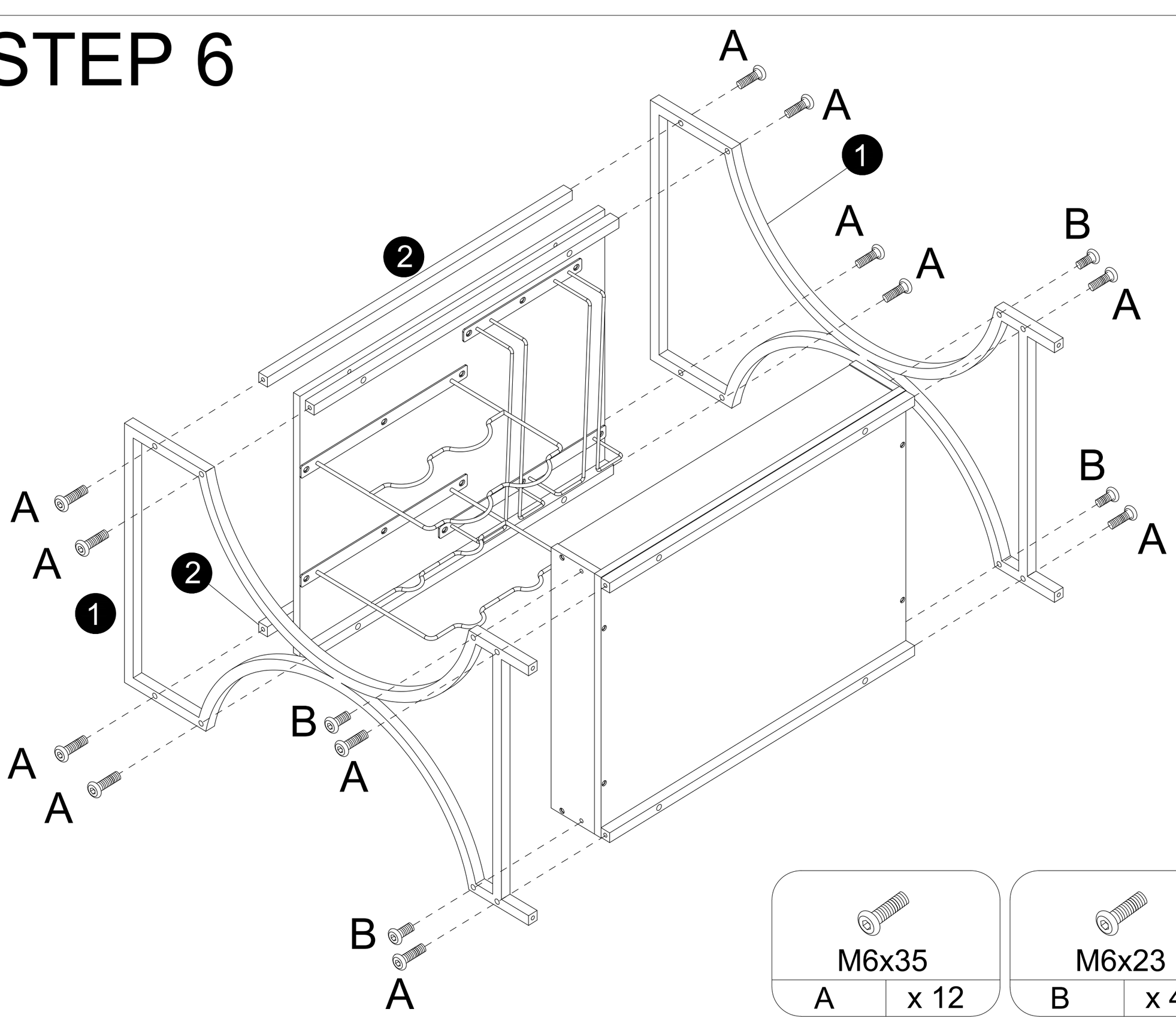

M6x35	
A	x 12

M6x23	
B	x 4

M4	
F	x 1

STEP 7

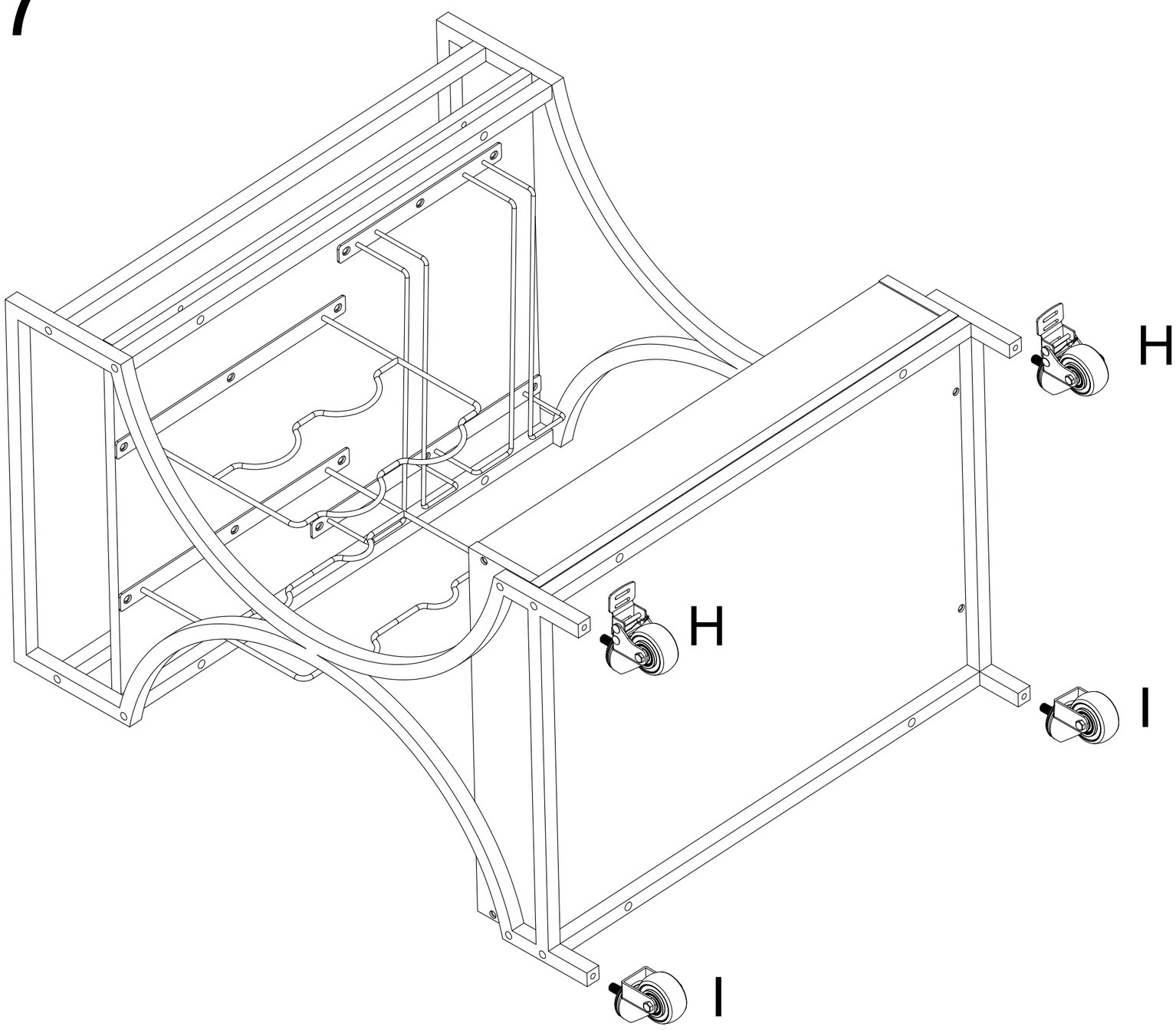

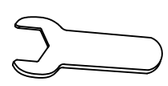	
G	x 1

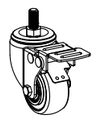	
H	x 2

	
I	x 2

STEP 8

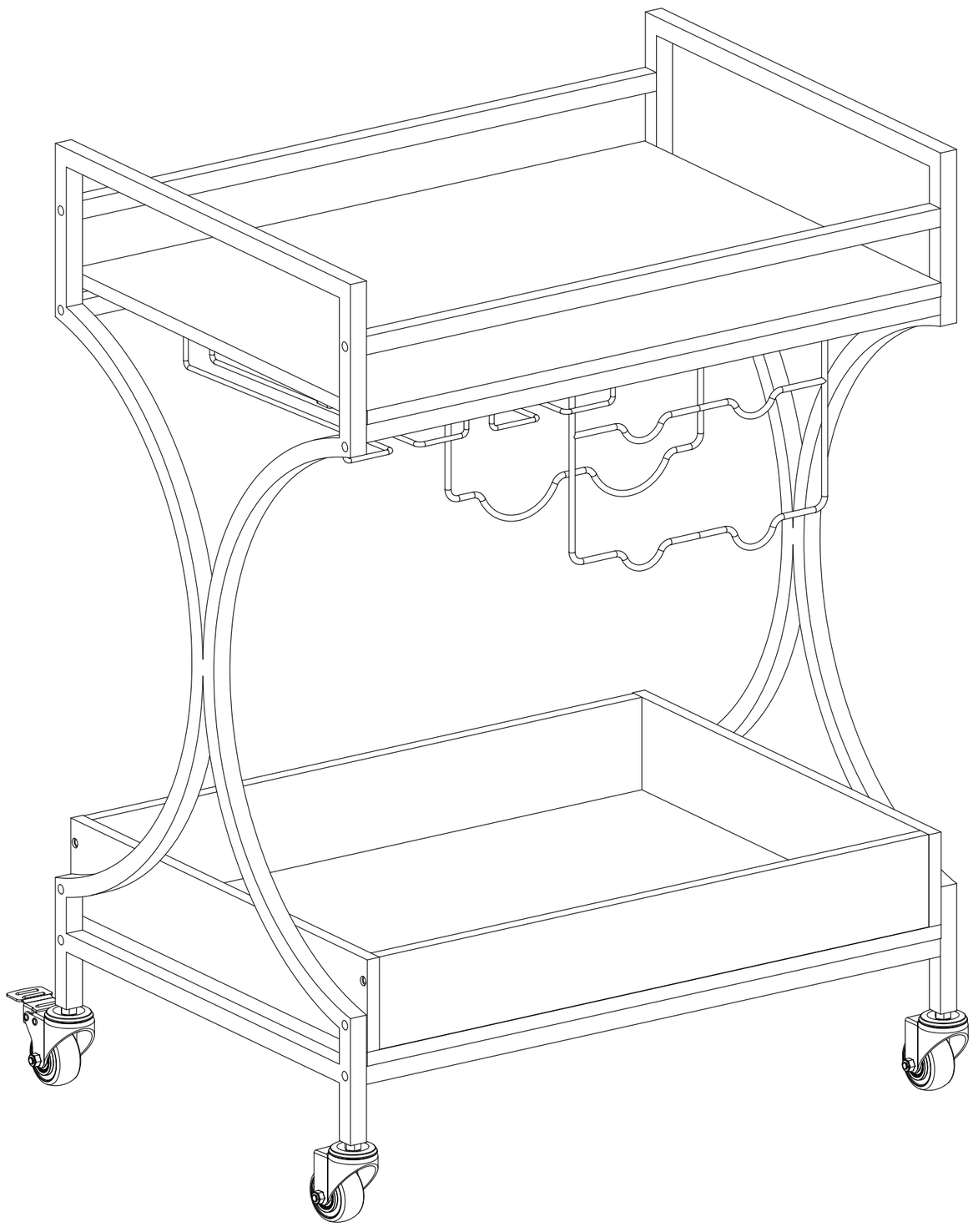

FURNITURE CARE AND MAINTENANCE

Medium - Density Fiberboard and Particle board

Thank you for your purchase. We want your item to last as long as possible. To ensure the product gives you years of service, please refer to this care and maintenance guide.



MAINTENANCE

· Tighten all bolts and screws again within the first 2 weeks of assembly
· Check the tightness of all bolts every 2 months, tighten them if necessary



CLEANING

· Clean the surface of the MDF (medium - density fiberboard) or PB (particle board) with a lightly dampened cloth.
· Small amount of mild soap can be used if necessary
• Dry the surface immediately after cleaning.

⚠ DO NOT use bleach or alcohol detergent to clean the surface.
⚠ DO NOT apply wood treatment on parts made with MDF and PB.
Medium - density fiberboard and Particle board will swell and distort when suffer from water damage.
Make sure to dry the furniture immediately after cleaning