Assembly instruction

INTRODUCTION

Thank you for purchasing our products. Please read the instructions carefully before installation and keep it in a safe place for future reference. If you need any assistance or support, please feel free to contact our customer support team.

PRECAUTIONS

1. There are many components and accessories in the package. Each component and accessory is labeled with a letter or a number, check carefully before using any of them. Keep them away from children to prevent accidents.

2. Please install the product on a clean and soft underlay (such as carpet or cardboard) to avoid scratching or damaging the surface of the product.

3. The main components of the product are relatively heavy. Please pay attention to safety during installation.

4. The product is not stable during installation. Please do not move it randomly before it is completely installed.

5. This product requires two people to install.

6. if you have any questions during installation, please contact the customer service in time.

* PLEASE BE SURE TO FOLLOW THE INSTALLATION STEPS IN THE MANUAL TO AVOID UNNECESSARY LOSSES CAUSED BY IMPROPER INSTALLATION.

* IF YOU NEED FURTHER ASSISTANCE, PLEASE CONTACT THE CUSTOMER SERVICE ONLINE.

HARDWARE LIST

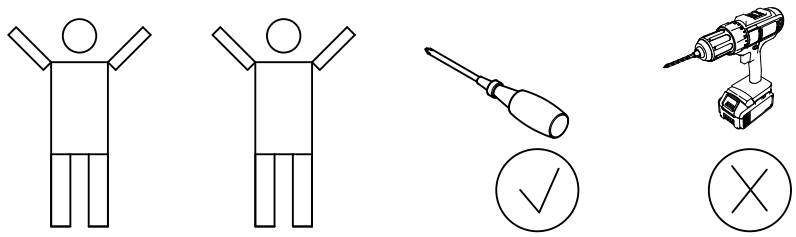

A 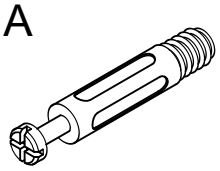 22 PCS	B 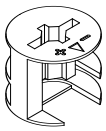 22 PCS	C 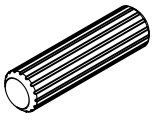 4 PCS	D  3.5x12 56 PCS	E 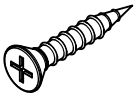 3.5x25 3 PCS
F 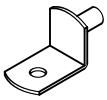 8 PCS	G  4 PCS	H  5*75mm 4 PCS	I 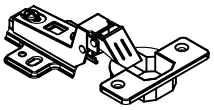 4 PCS	J 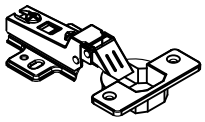 4 PCS
K  8 PCS	L  4 PCS	M  4 PCS	N 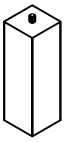 1 PC	O 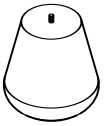 4 PCS

PARTS LIST

1 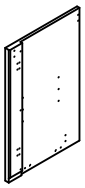 1PC	2 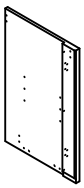 1PC	3 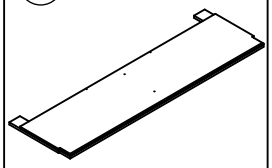 1PC	4 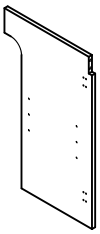 1PC	5 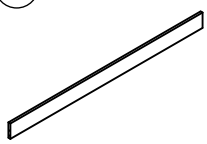 1PC
6 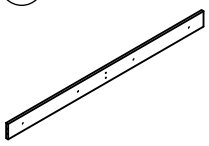 1PC	7 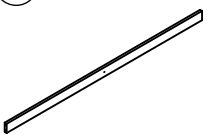 1PC	8 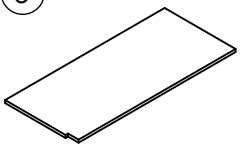 1PC	9 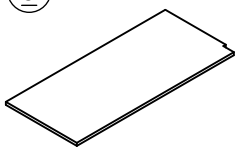 1PC	10 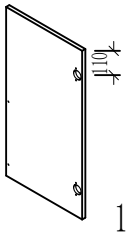 1PC
11 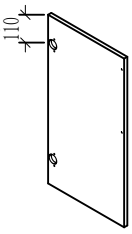 1PC	12 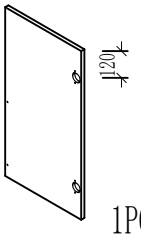 1PC	13 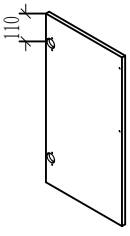 1PC	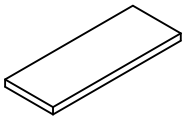	

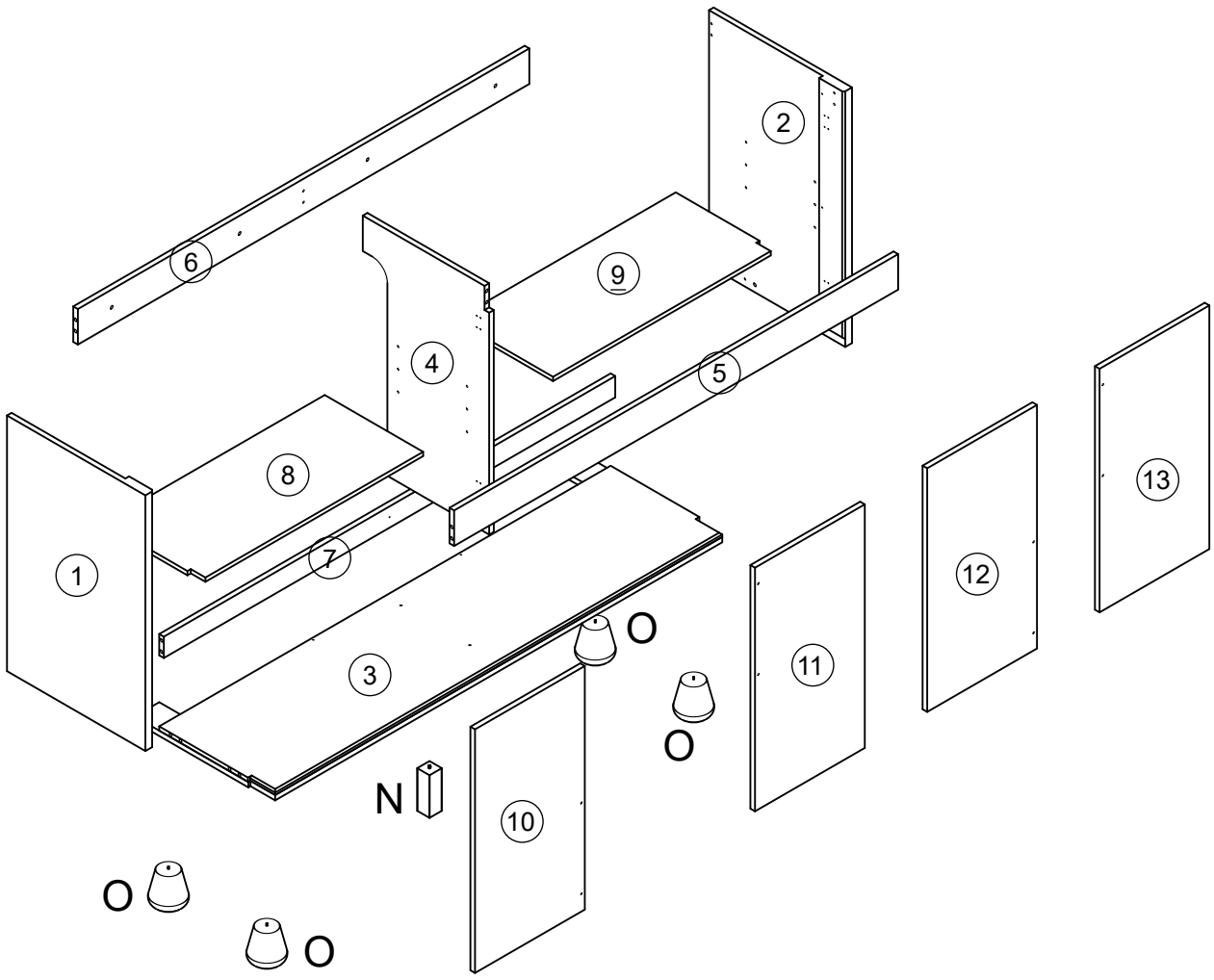
6
2
9
4
5
8
1
7
3
O
O
11
12
13
N
10
O
O

STEP 1

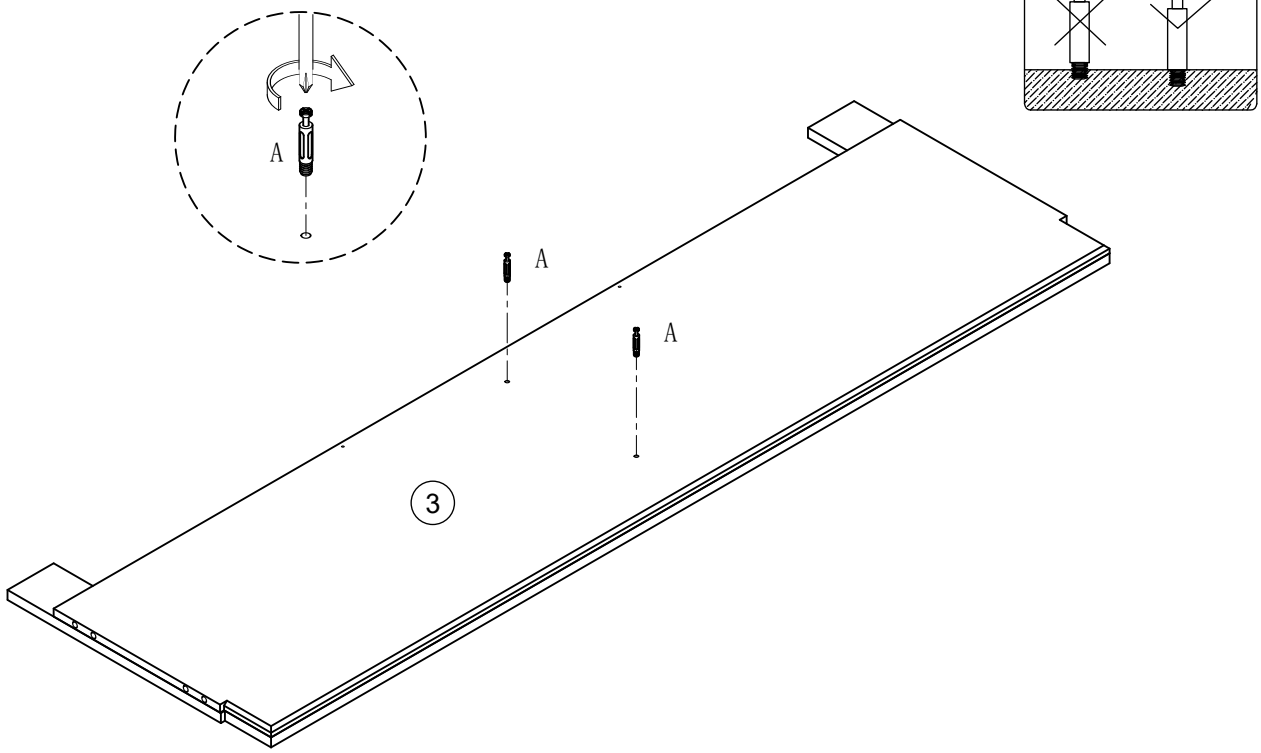

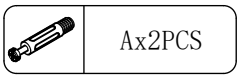

STEP 2

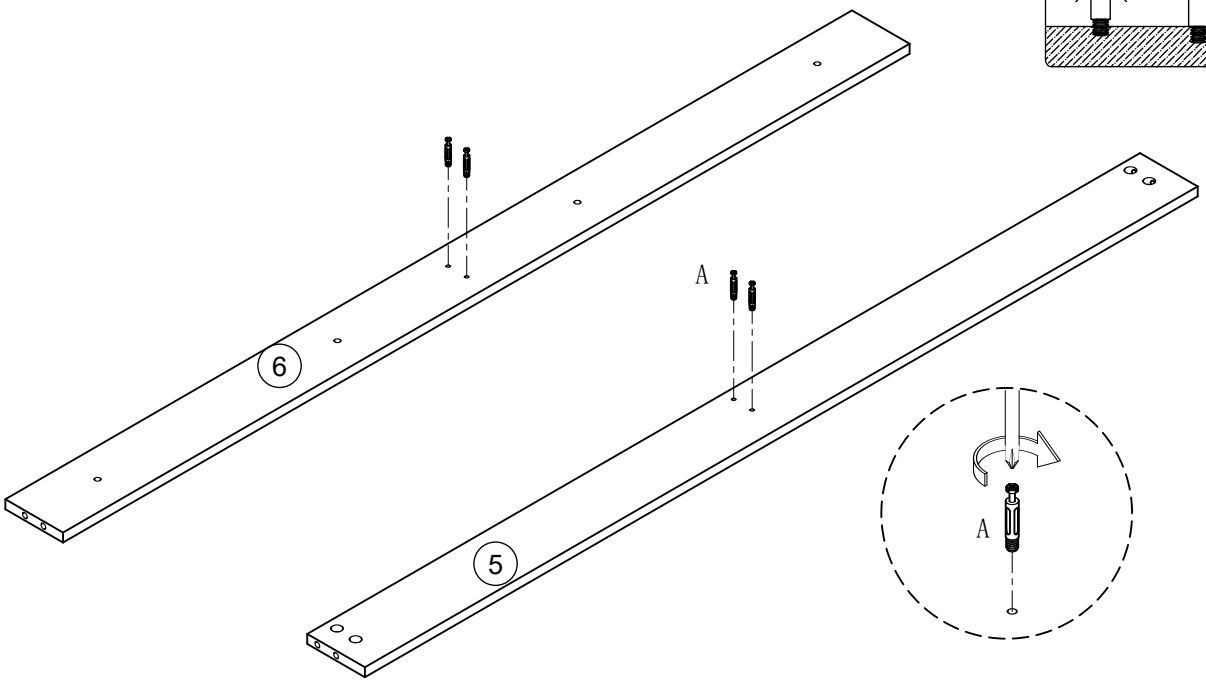

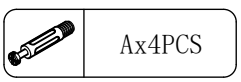

STEP3

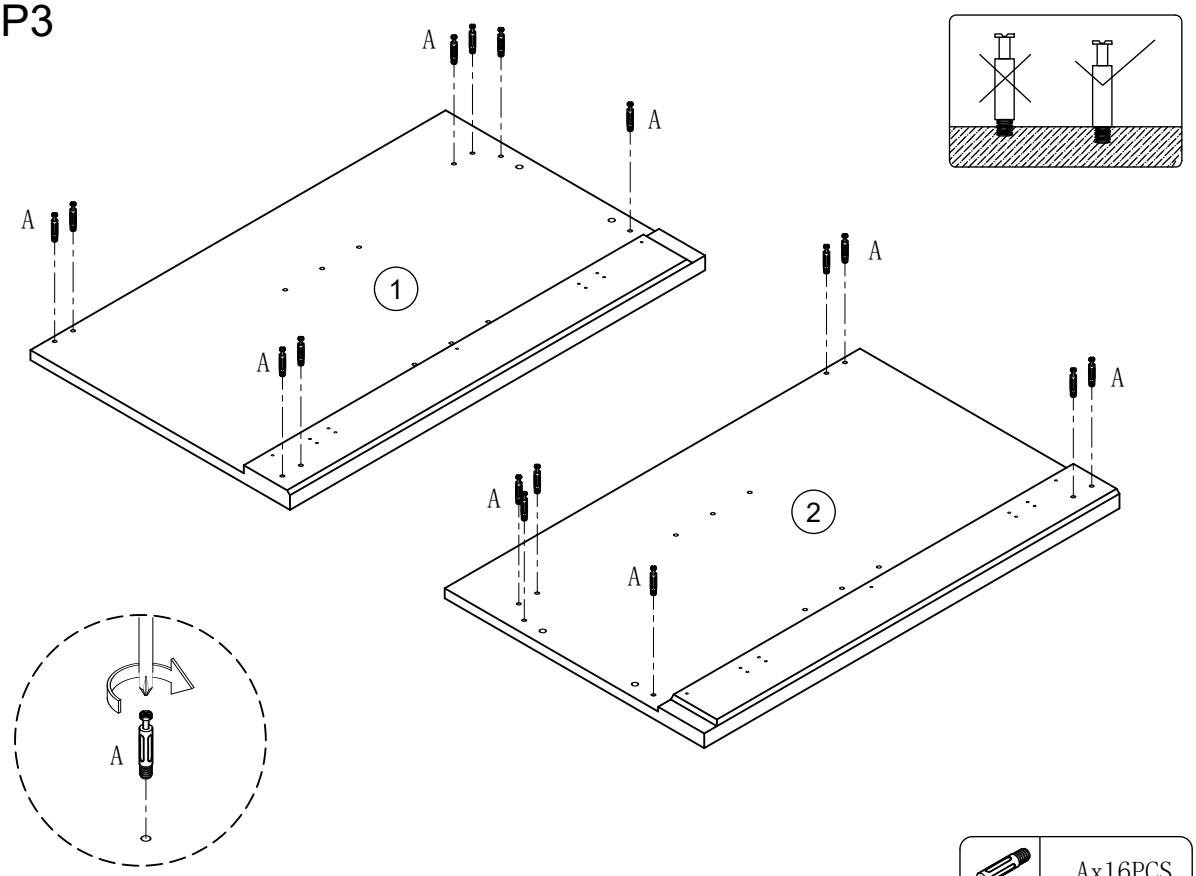

Ax16PCS

STEP4

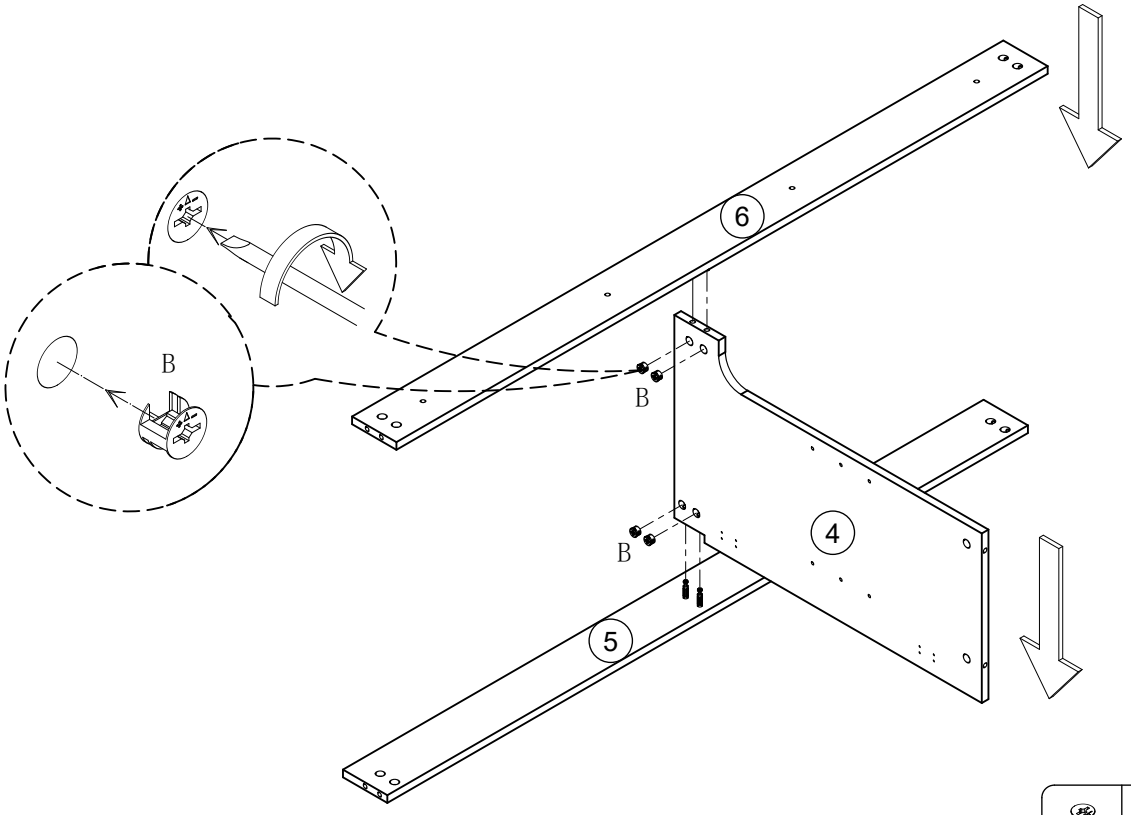



Bx4PCS

STEP5

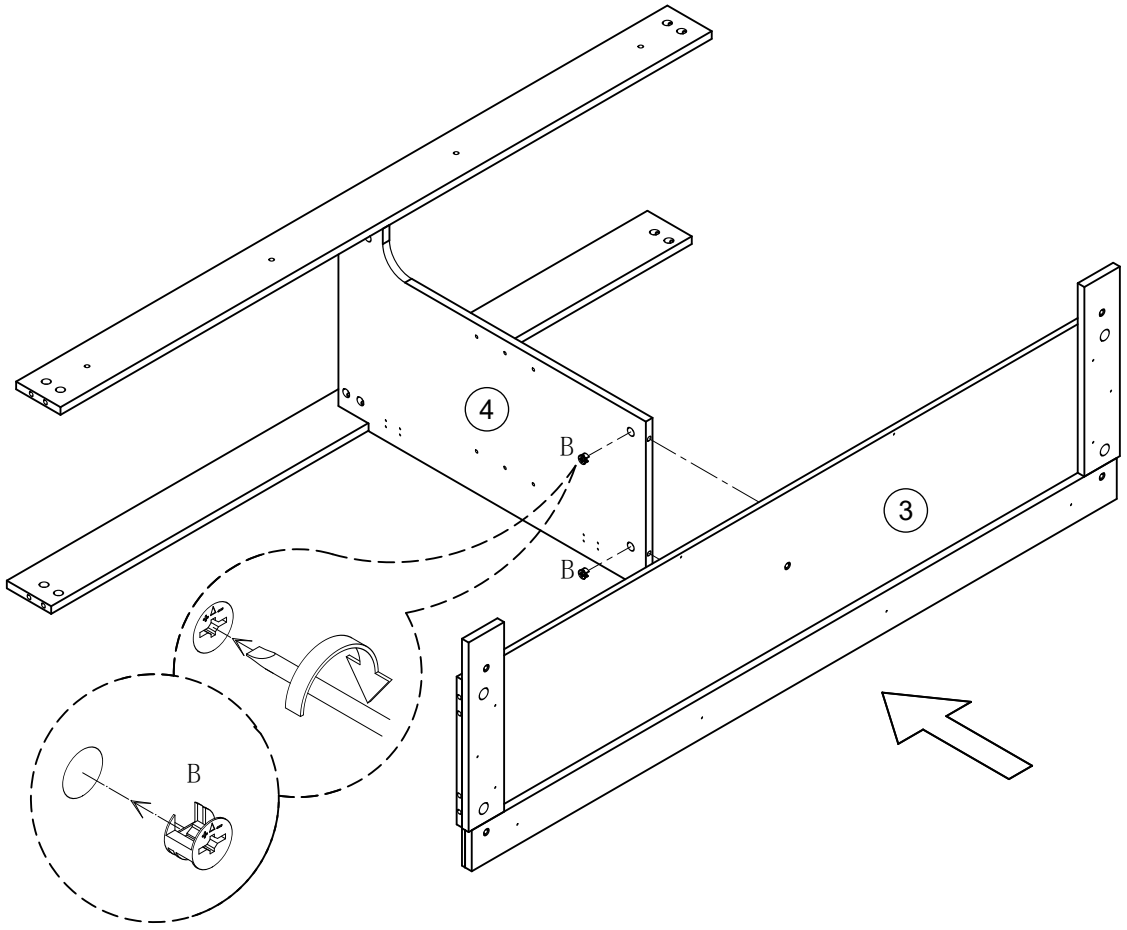

	Bx2PCS

STEP6

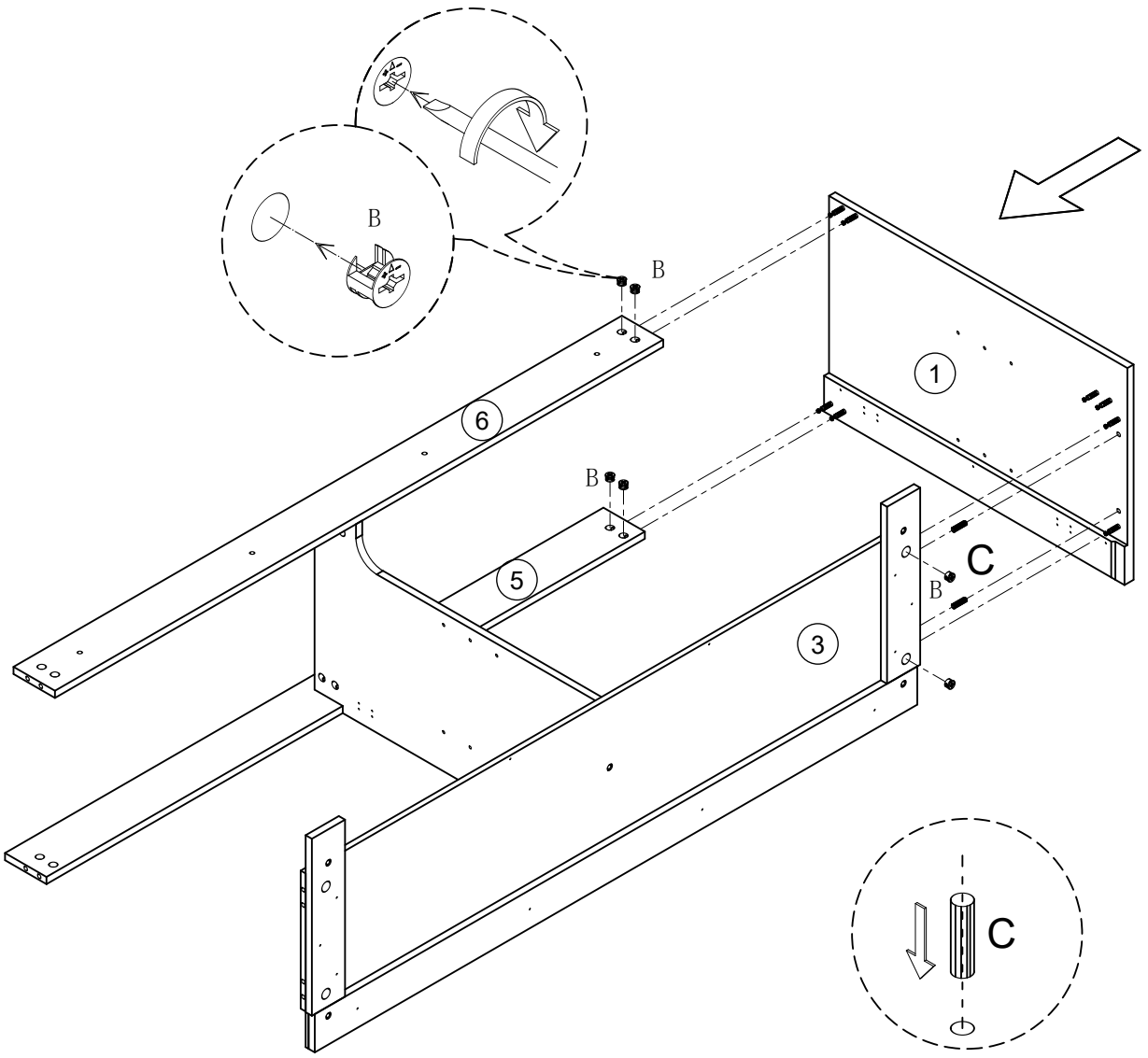

	Bx6PCS
	Cx2PCS

STEP7

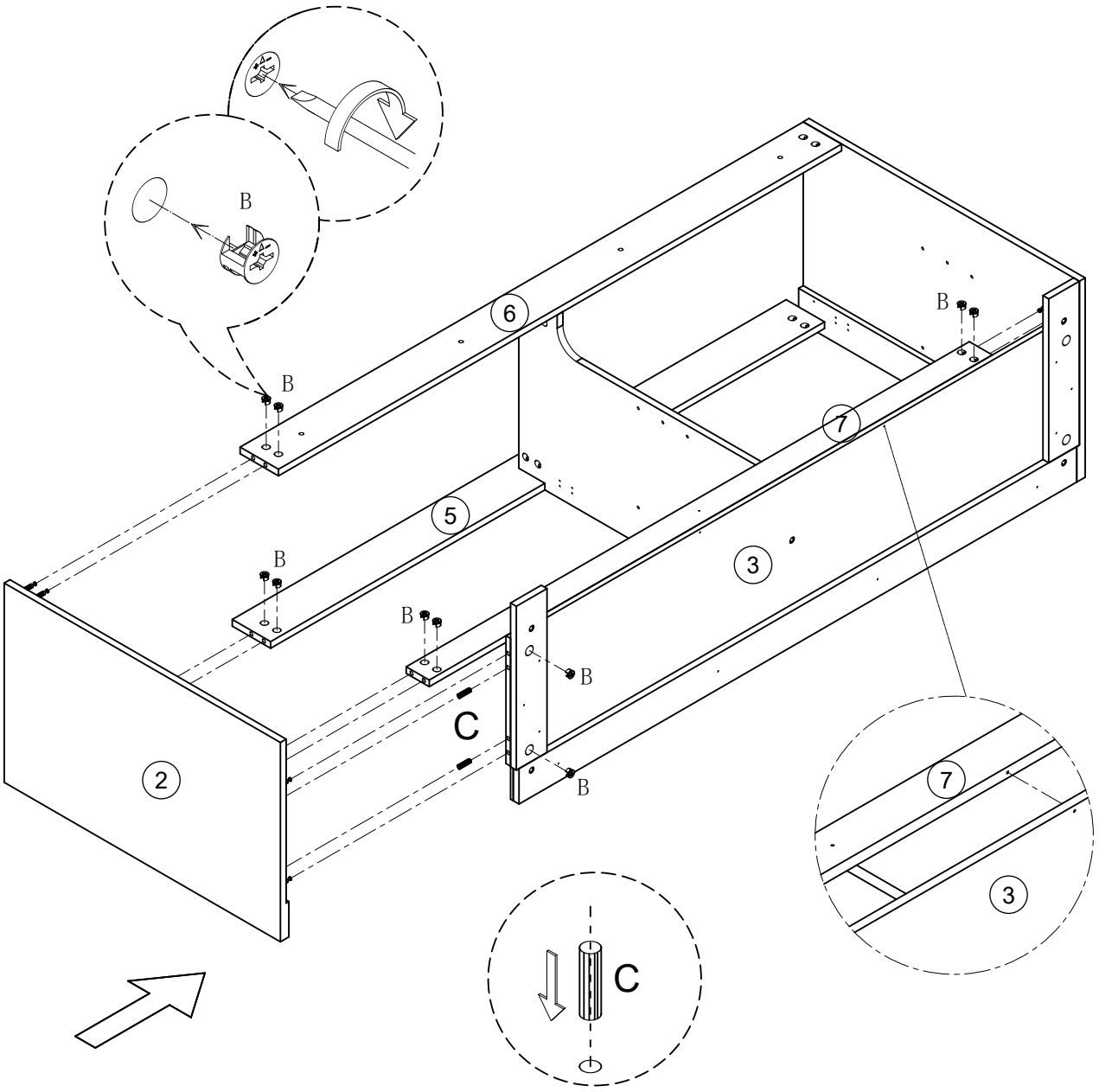

	Bx10PCS
	Cx2PCS

STEP8

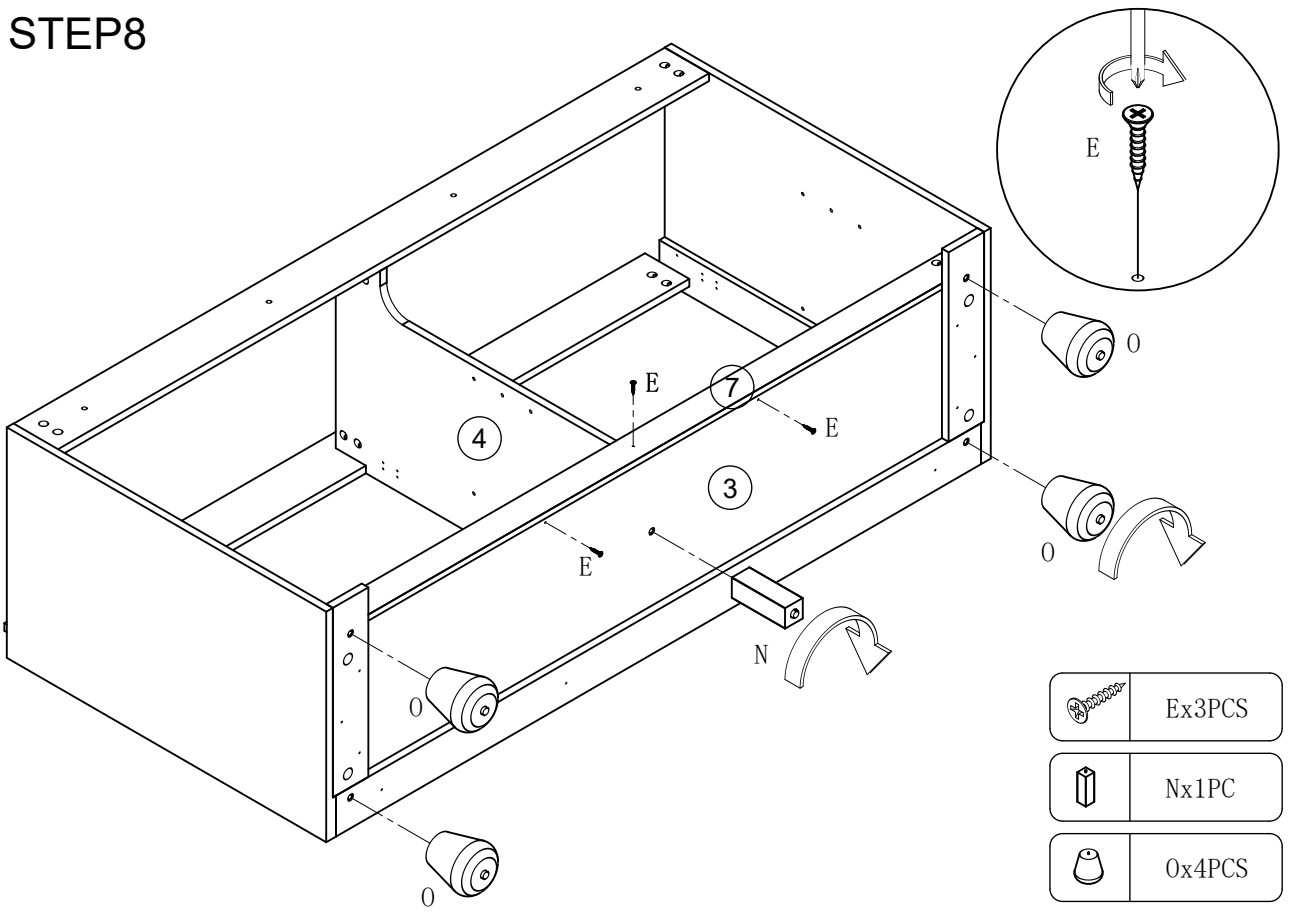

	Ex3PCS
	Nx1PC
	0x4PCS

STEP9

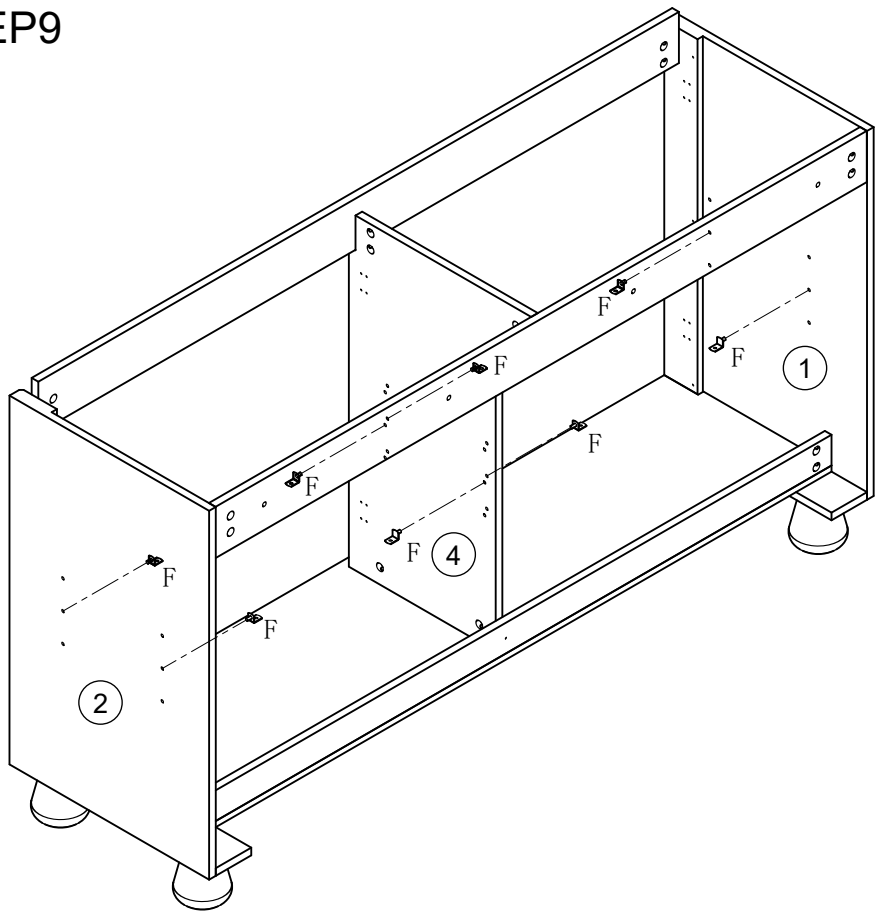

	Fx8PCS

STEP10

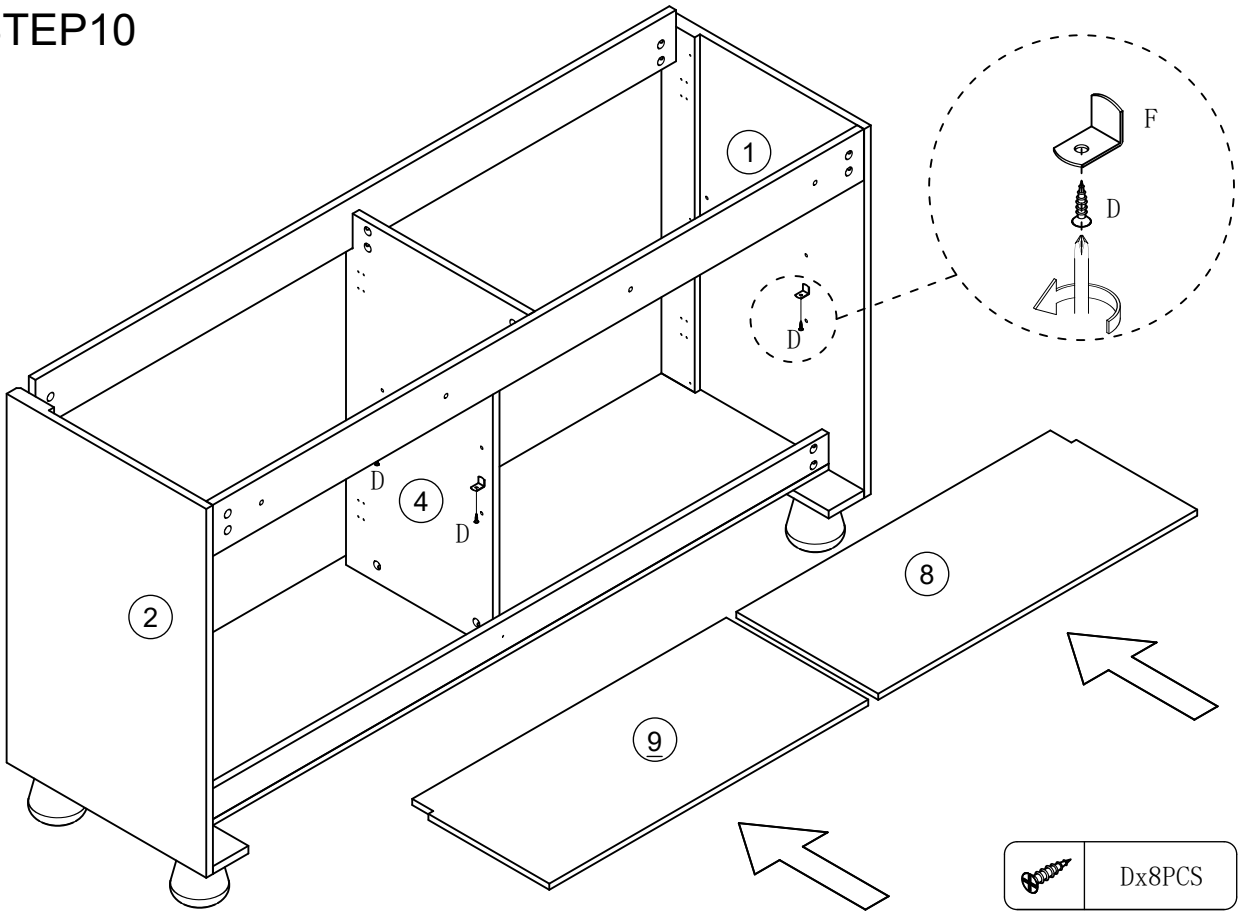

	Dx8PCS

STEP11

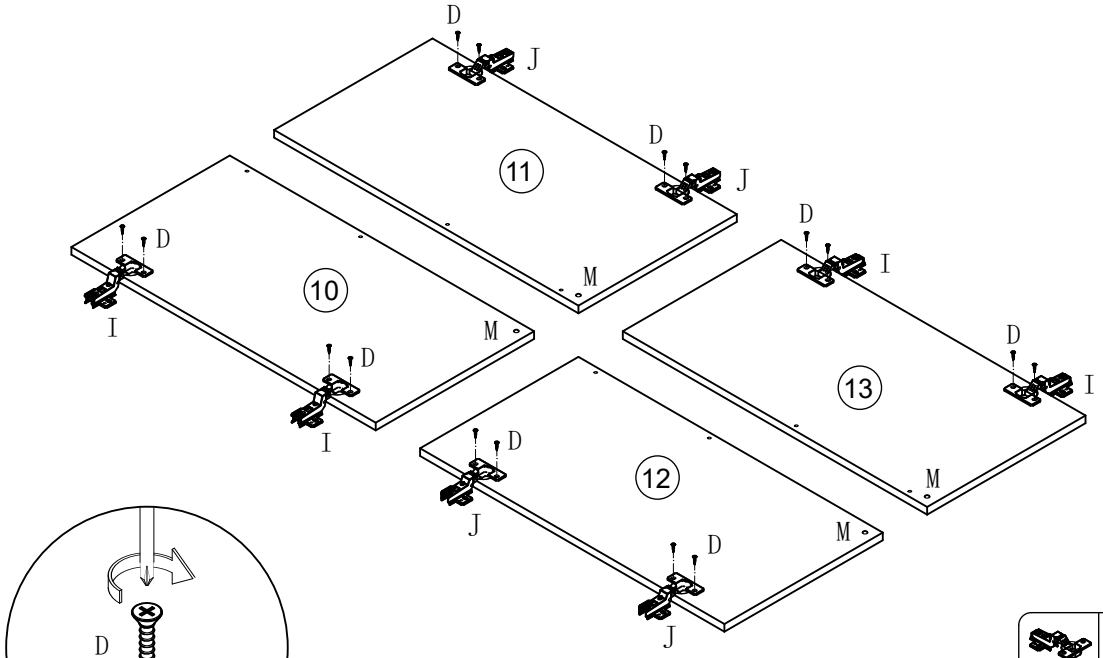

	Ix4PCS
	Jx4PCS
	Mx4PCS
	Dx16PCS

STEP12

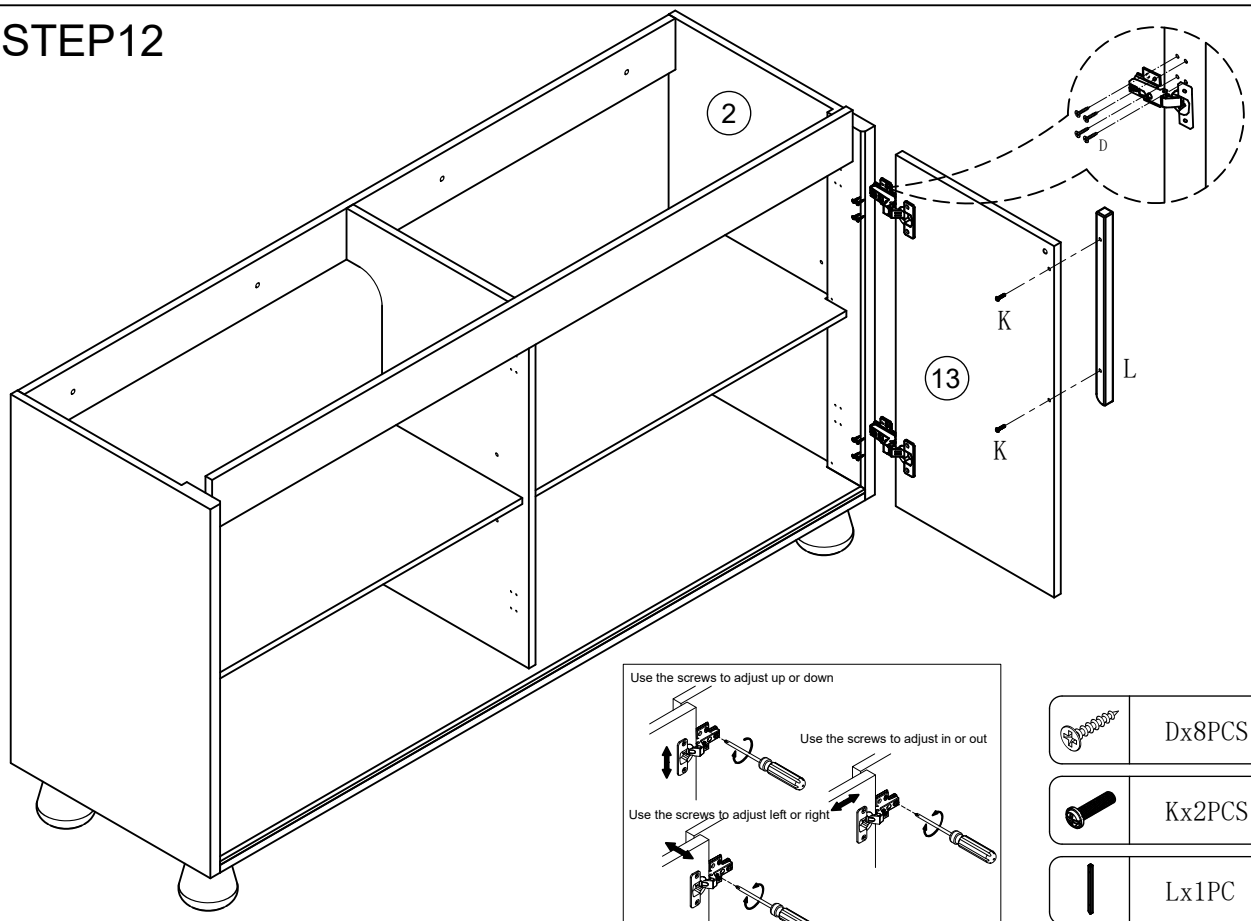

STEP13

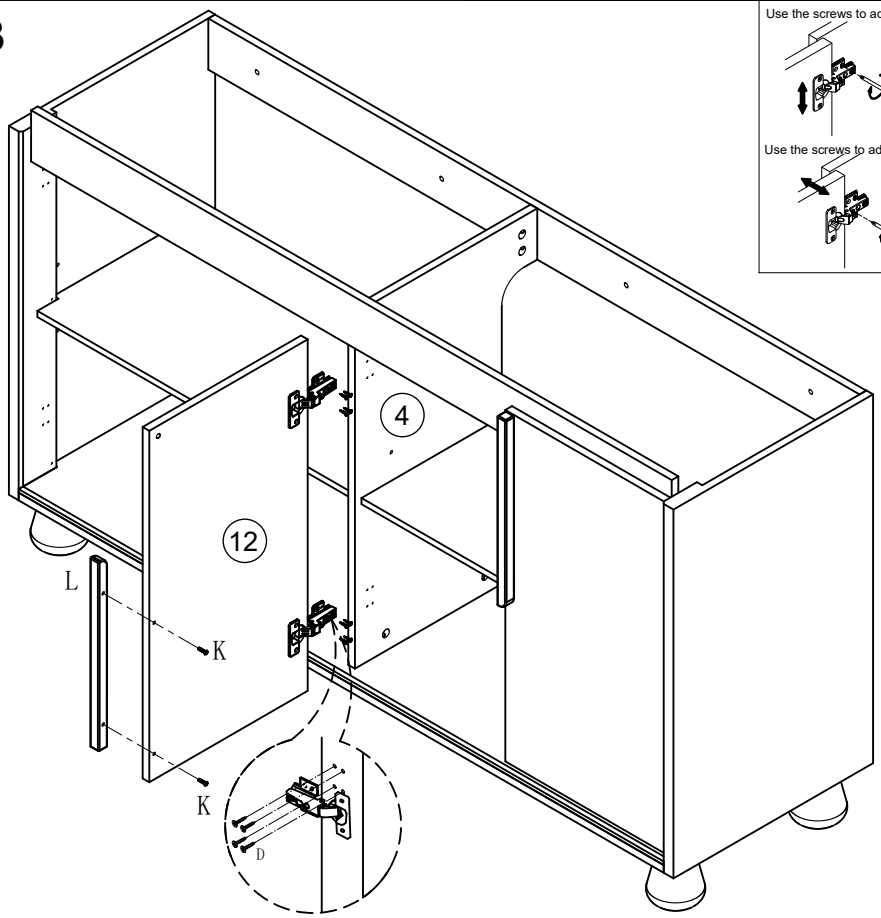

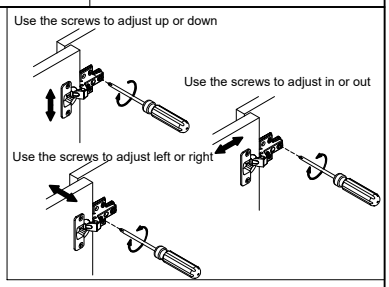

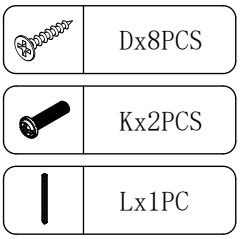

STEP14

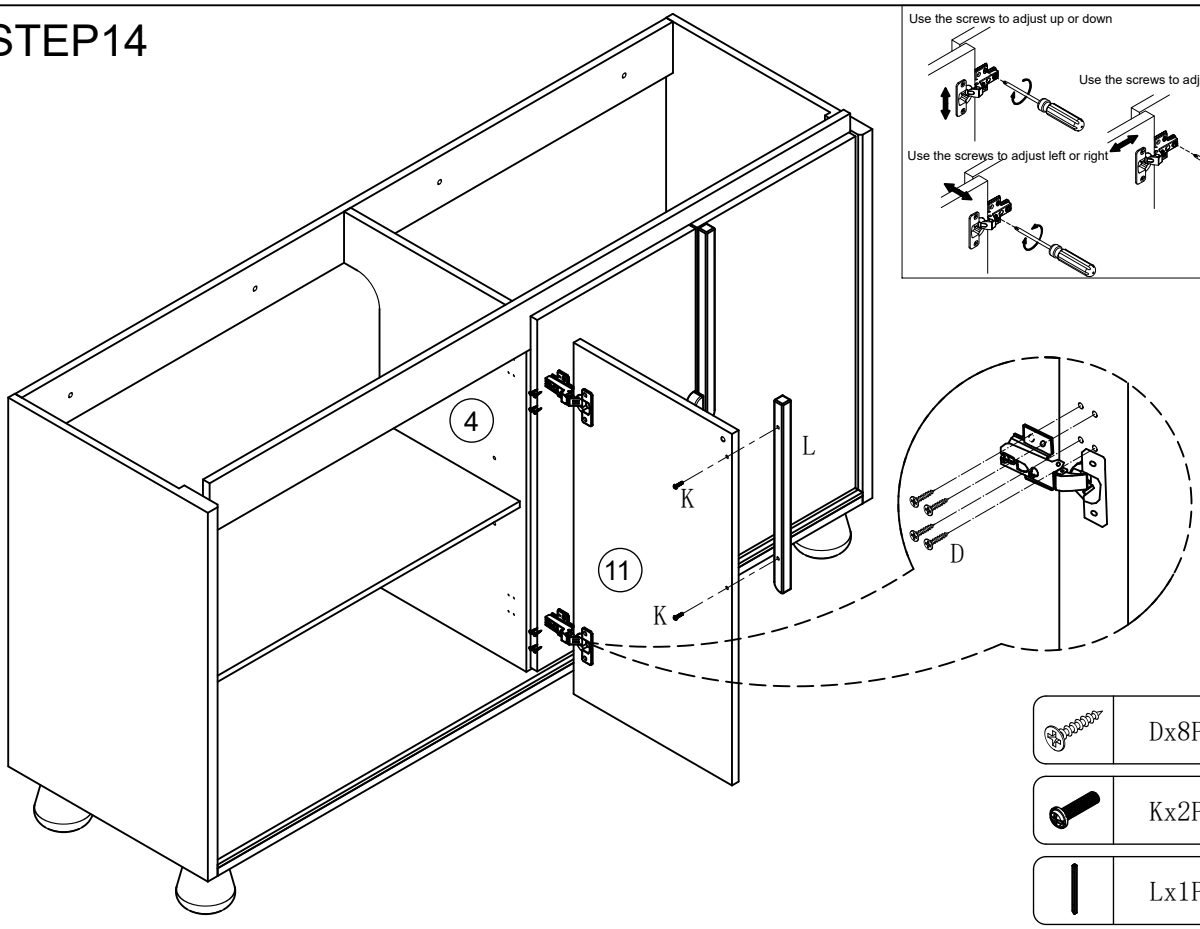

	Dx8PCS
	Kx2PCS
	Lx1PC

STEP15

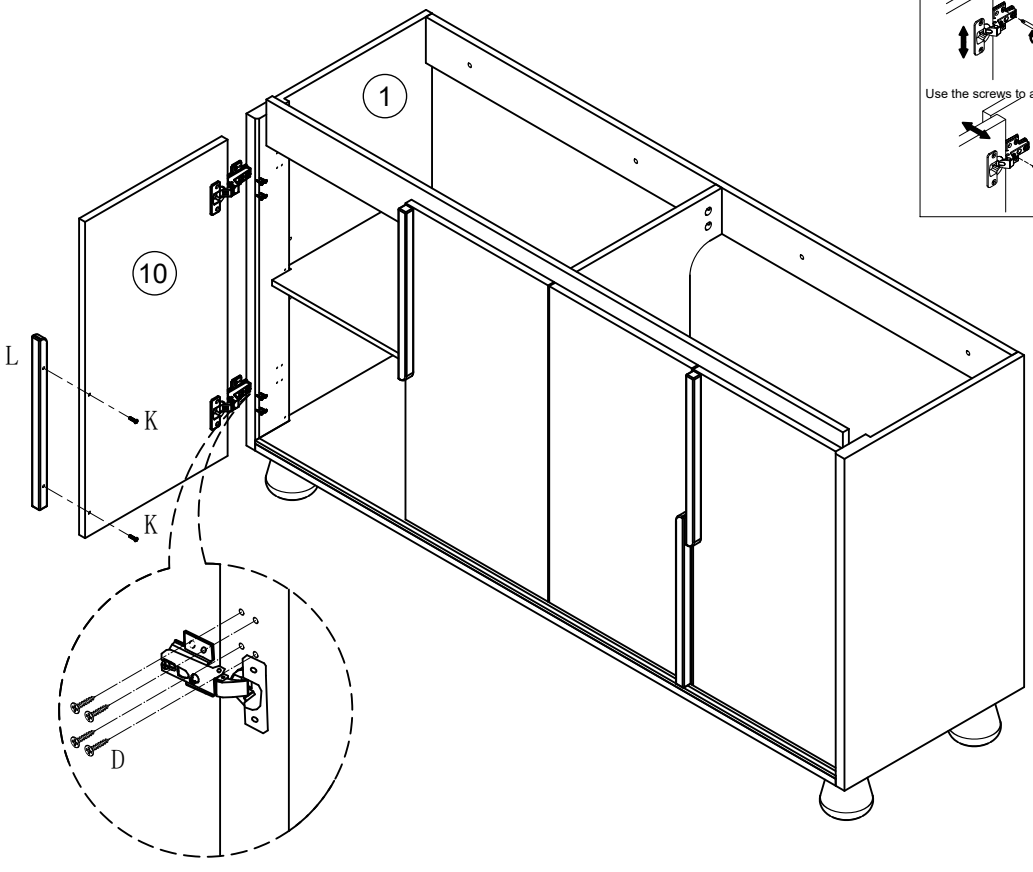

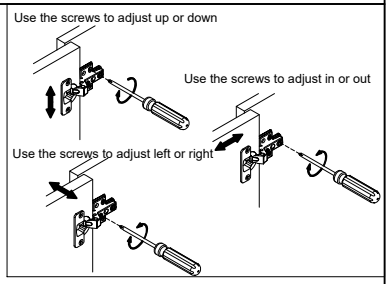

	Dx8PCS
	Kx2PCS
	Lx1PC

STEP16

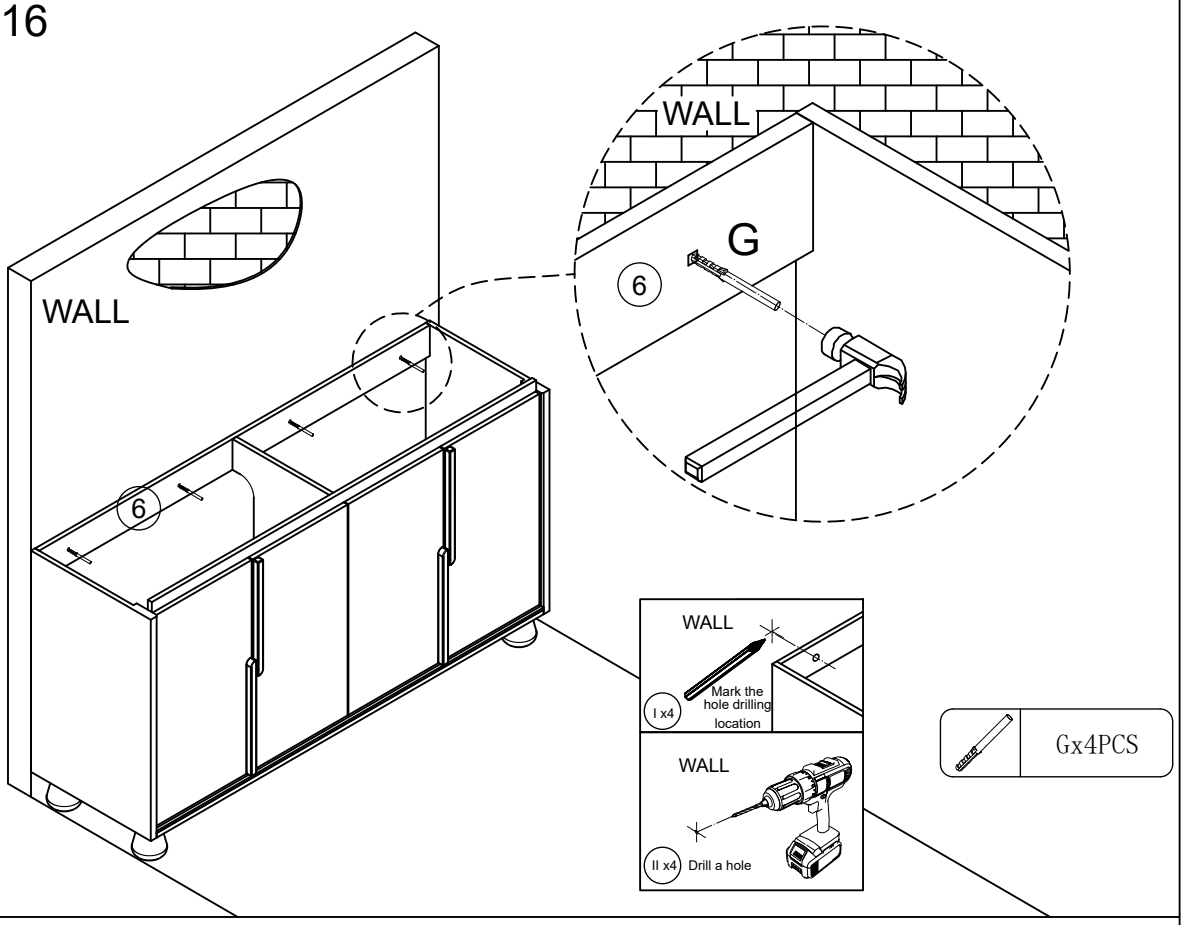

Gx4PCS

STEP17

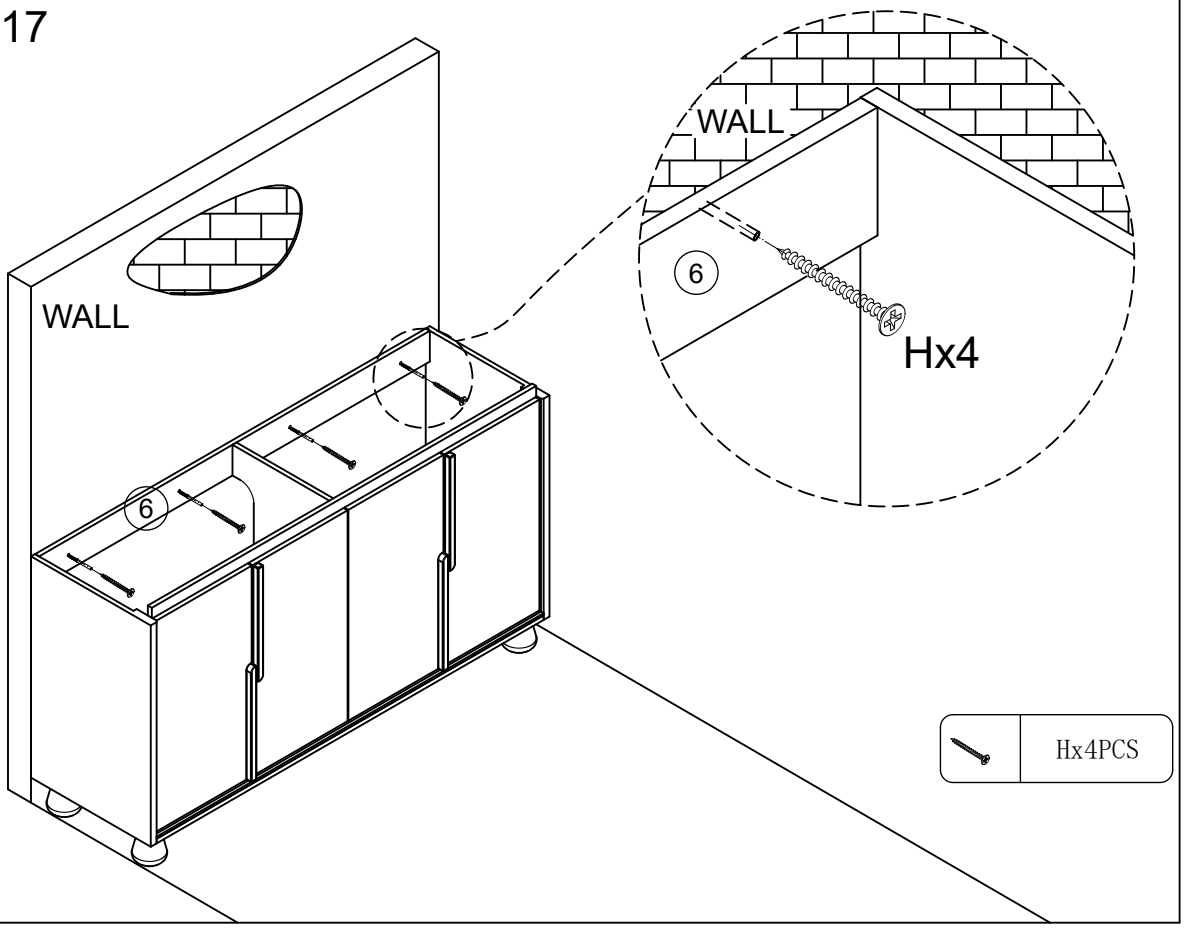

Hx4PCS

STEP18

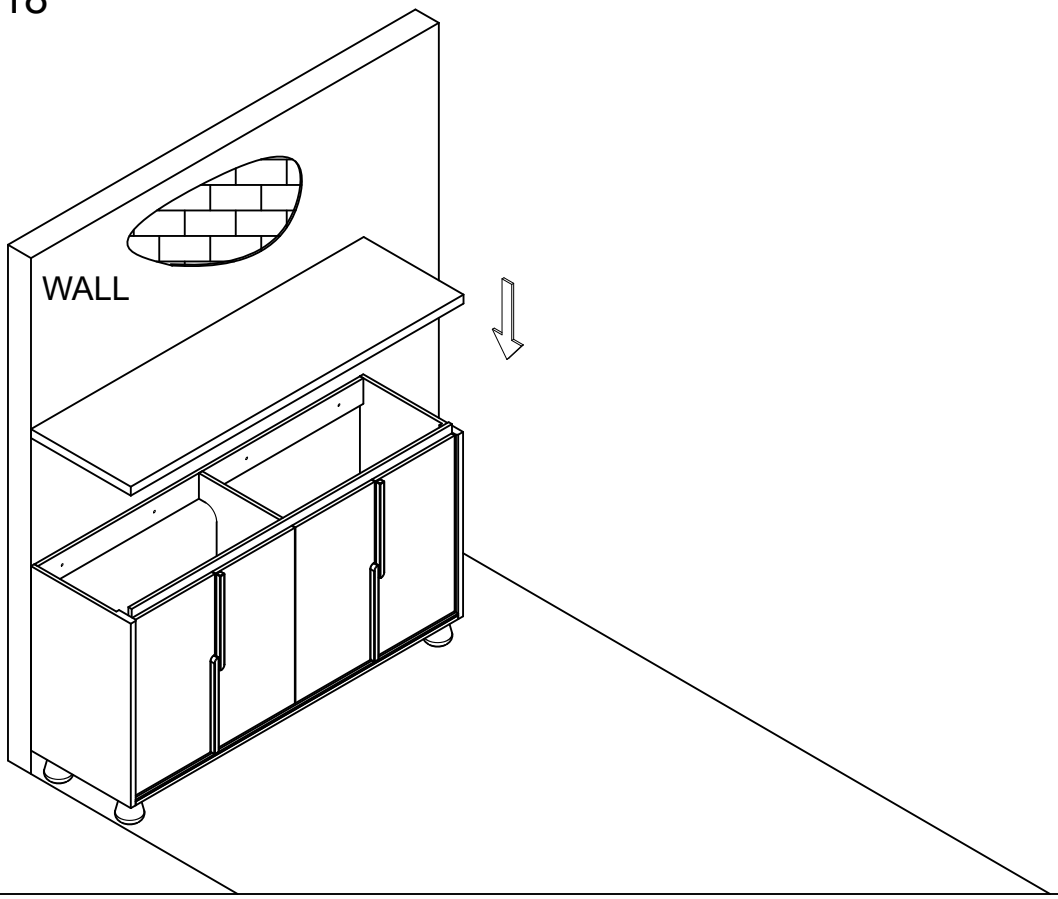

STEP19

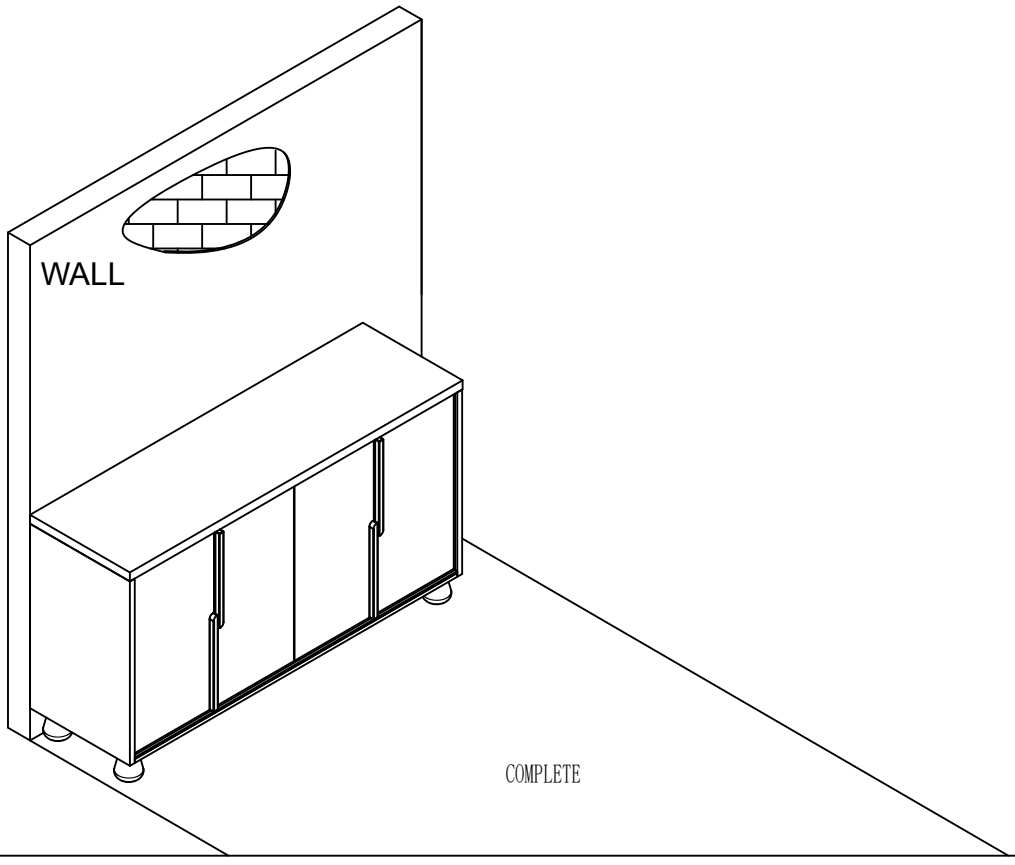

HINGE ADJUSTMENTS

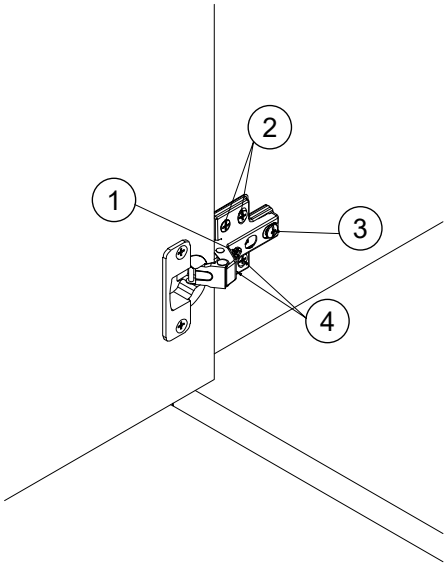

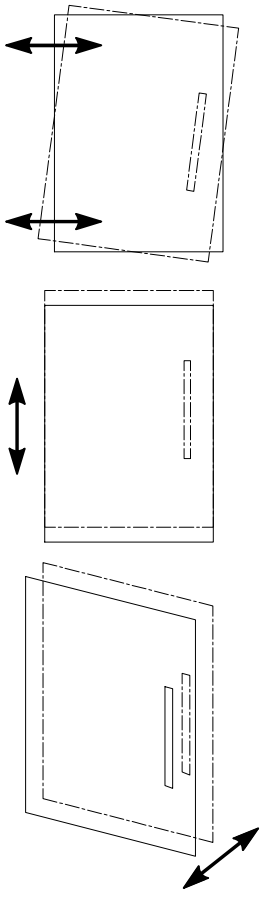

①Sideways / Tilt adjustment

Turn the screw
clockwise to move the door further away from the side of the cabinet
anticlockwise to move the door closer to the side of the cabinet

②④ Height adjustment

While supporting the weight of the door, turn the screws
clockwise to move the door up
anticlockwise to move the door down

③ Forward and back adjustment