ASSEMBLY INTRODUCTION

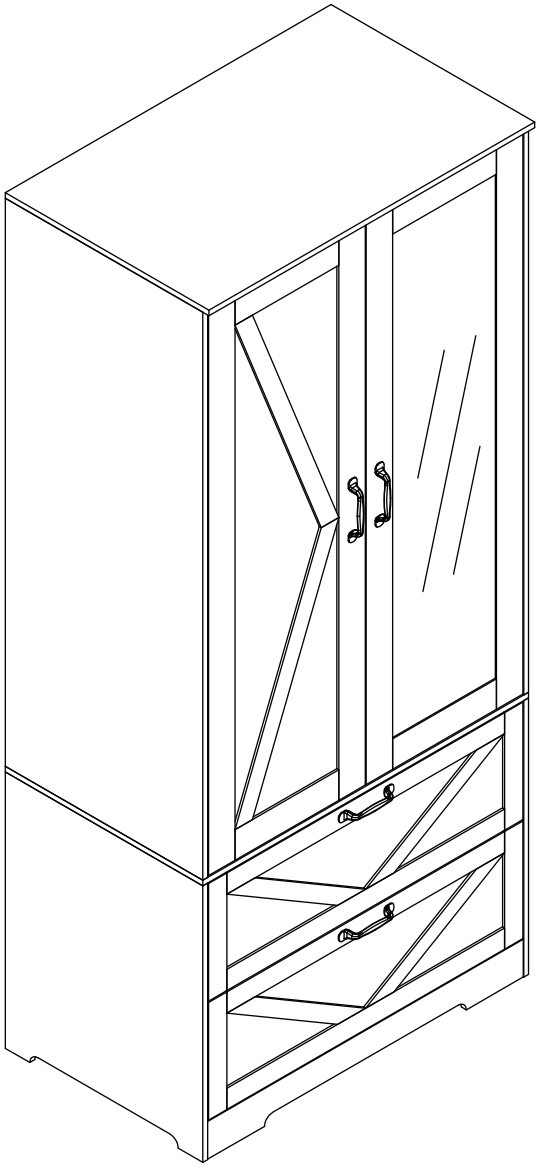

2024.04.24-ver.1

Plate

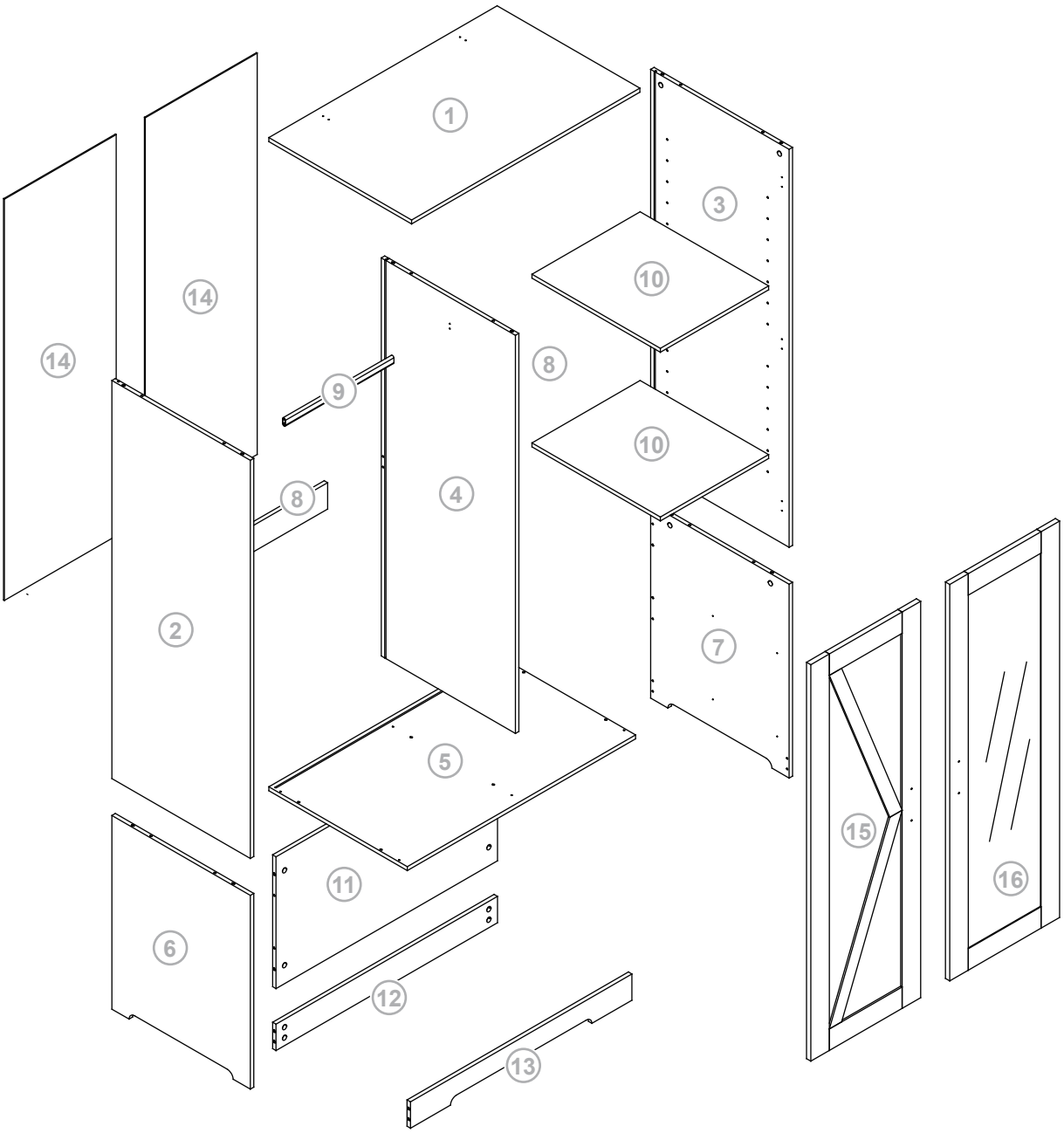

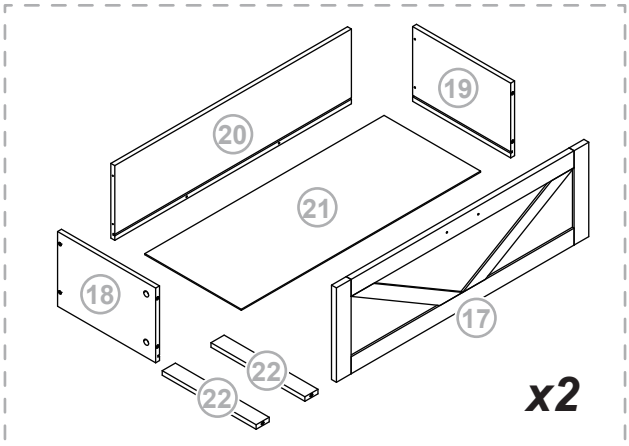

Plate

1
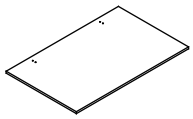
1 PC

2
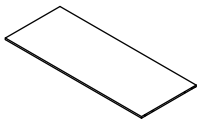
1 PC

3
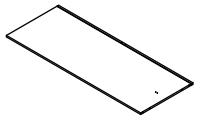
1 PC

4
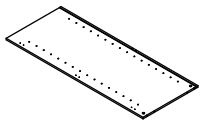
1 PC

5
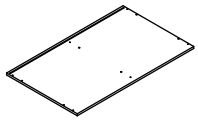
1 PC

6
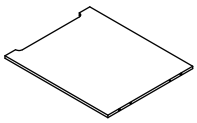
1 PC

7
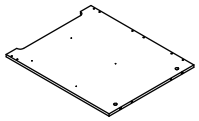
1 PC

8
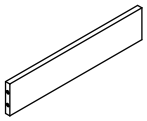
2 PCS

9
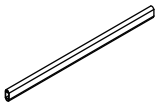
1 PC

10
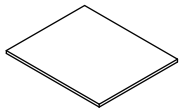
2 PCS

11
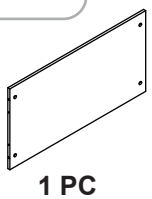
1 PC

12
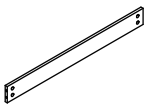
1 PC

13
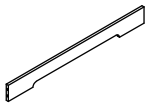
1 PC

14
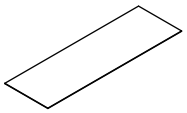
2 PCS

15
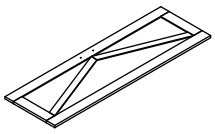
1 PC

16
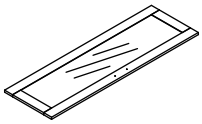
1 PC

17
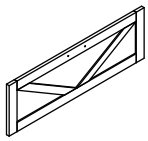
2 PCS

18

2 PCS

19

2 PCS

20
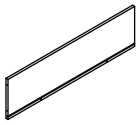
2 PCS

21
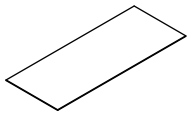
2 PCS

22
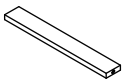
4 PCS

Fitting

A x 42 +2

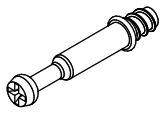

M6 x 35 mm

B x 42 +2



φ15 x 9.5 mm

C x 20 +2

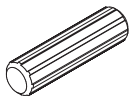

φ6 x 30 mm

D x 18 +2



φ5 x 45 mm

E x 30 +2



φ3 x 12mm

F x 4

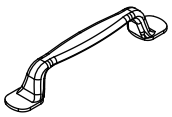

132 x 13 x 20 mm

G x 8 +1

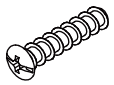

φ4 x 18 mm

H x 2



φ4 x 17 mm

I x 1



4 mm

J x 3

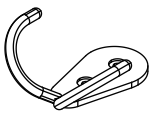

K x 2



75 x 15 x 30 mm

L x 6

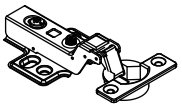

φ35 mm

M x 36 +2

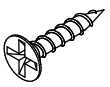

φ4 x 12 mm

N x 1

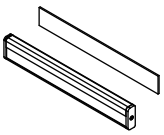

190 x 30 x 15 mm

O x 8

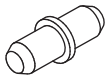

φ5 x 19 mm

P x 4

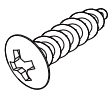

φ4 x 12 mm

Q x 12

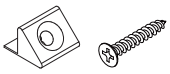

R x 2

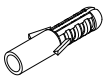

φ6 x 30 mm

S x 2



φ4 x 35 mm

CR x 2

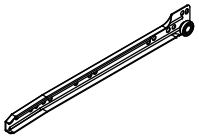

300 mm

CL x 2

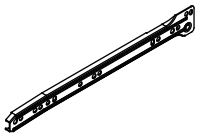

300 mm

DR x 2

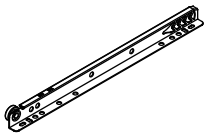

300 mm

DL x 2

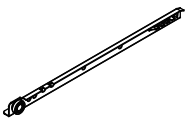

300 mm

1

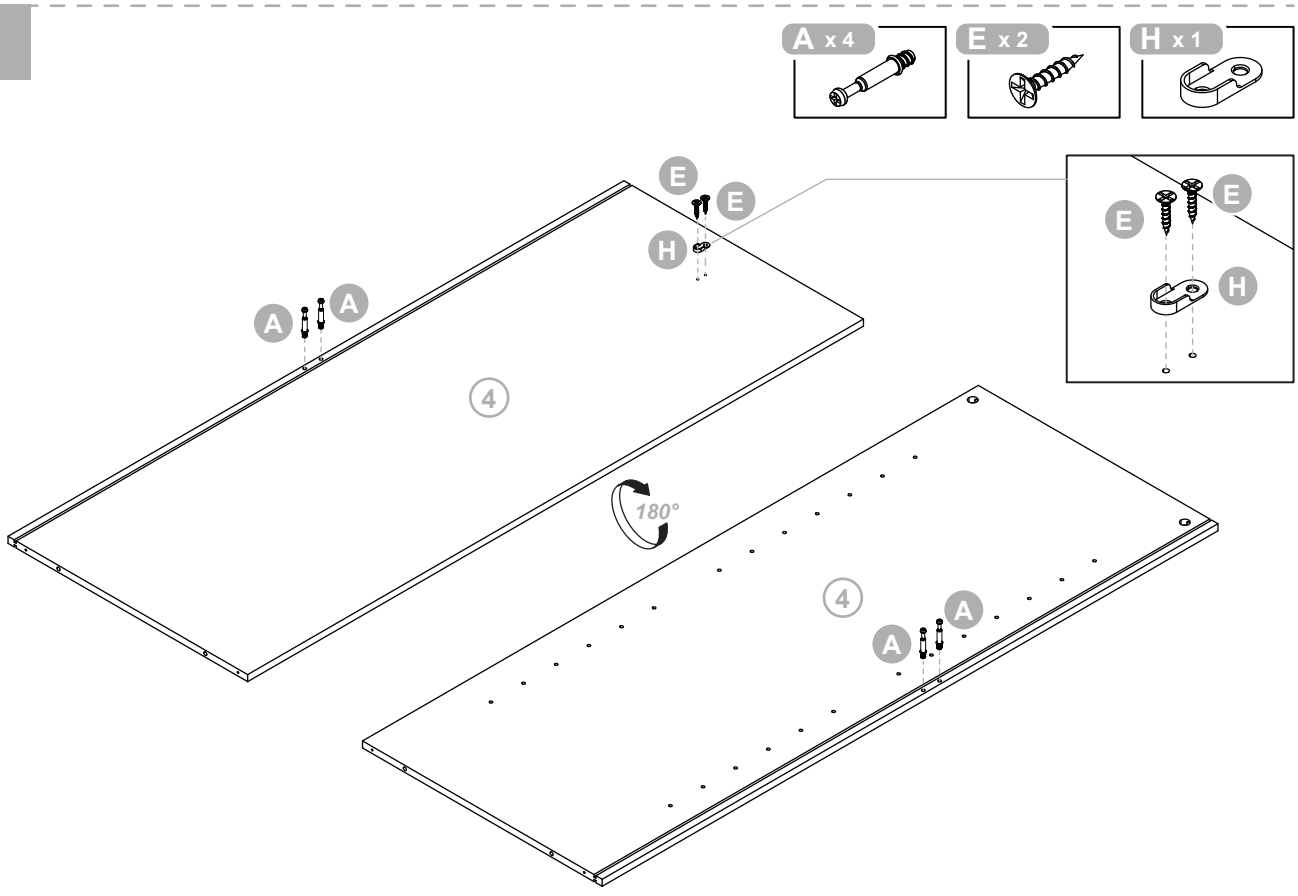
A x 4
E x 2
H x 1
E
E
H
A
A
4
180°
4
A
A
E
E
H

2

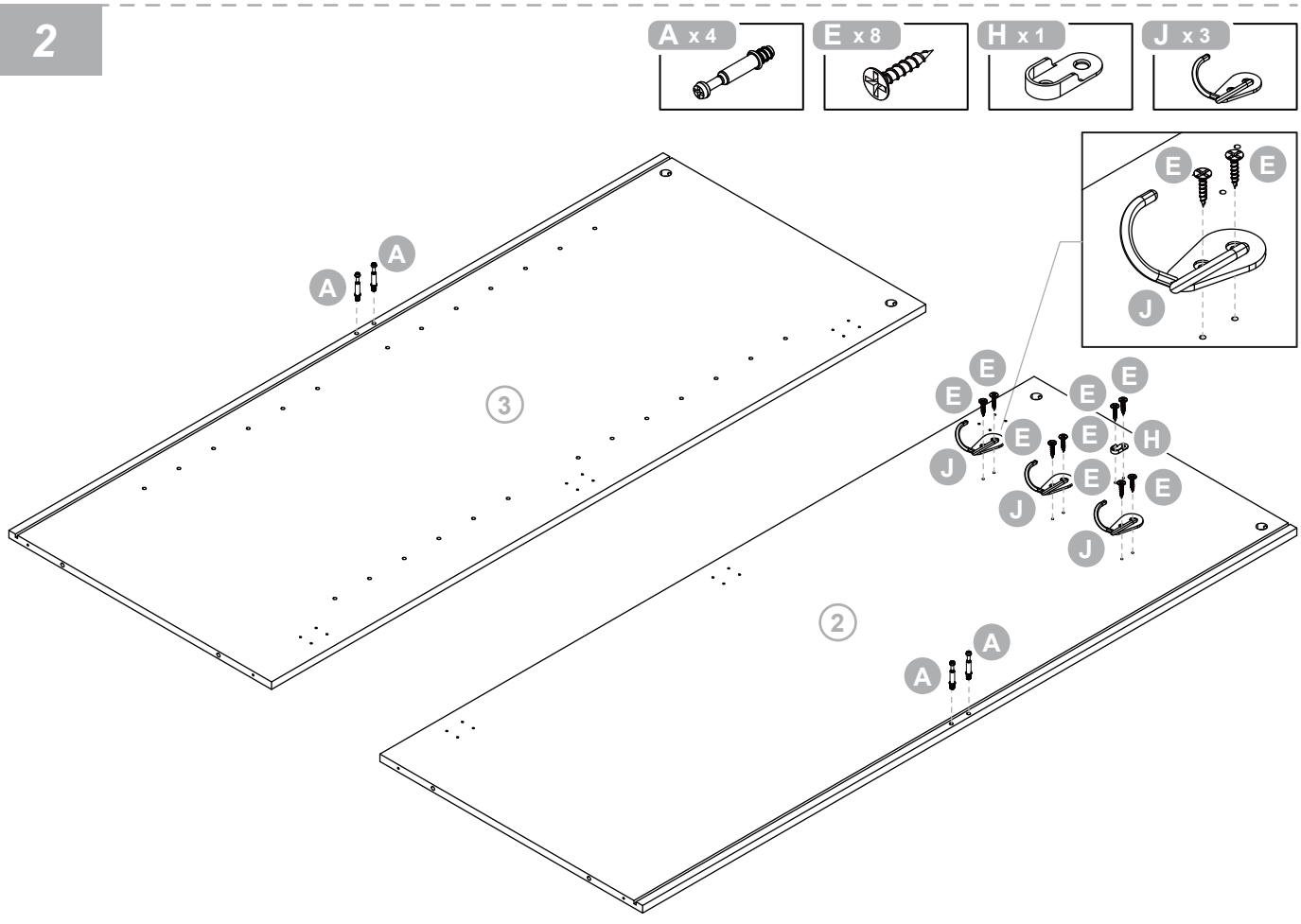
A x 4
E x 8
H x 1
J x 3
E
E
J
A
A
3
E
E
E
E
E
E
H
J
E
E
J
J
2
A
A

3

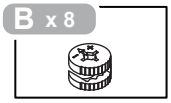

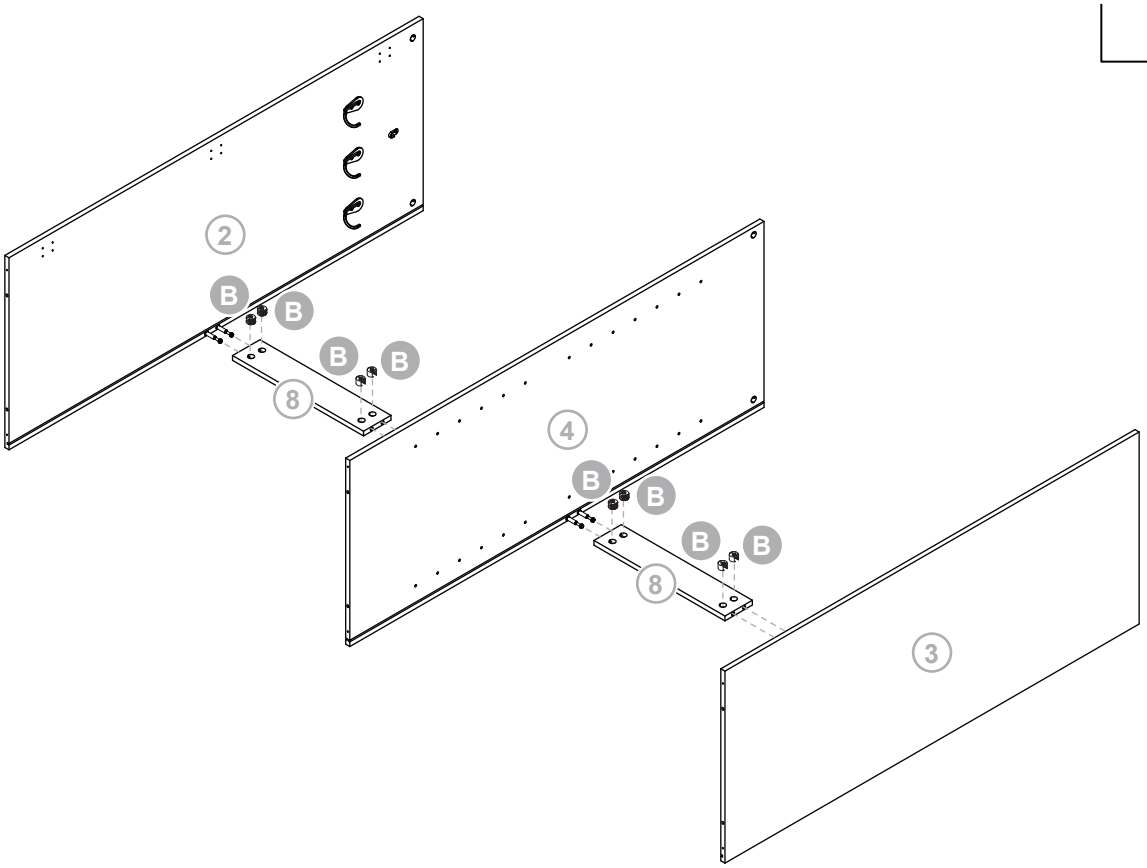

4

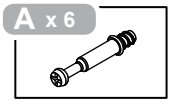

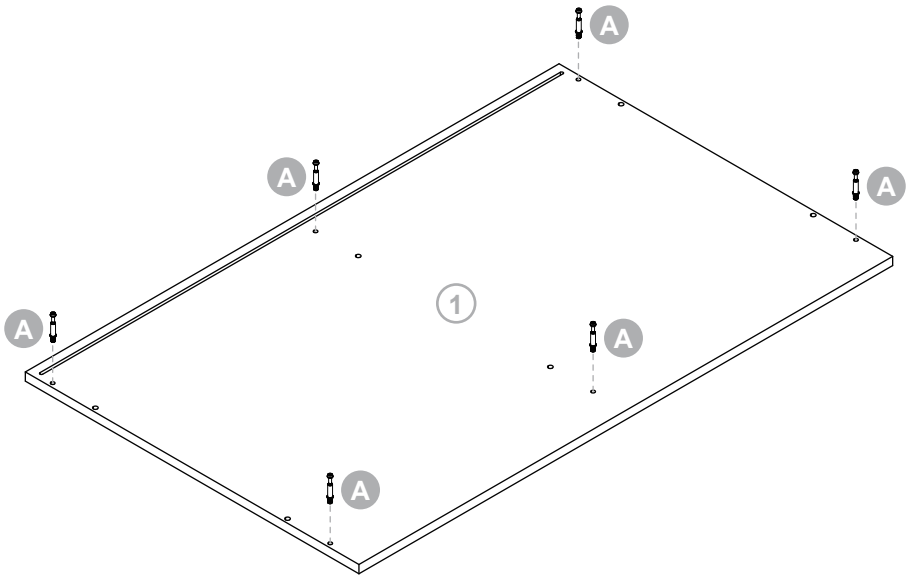

5

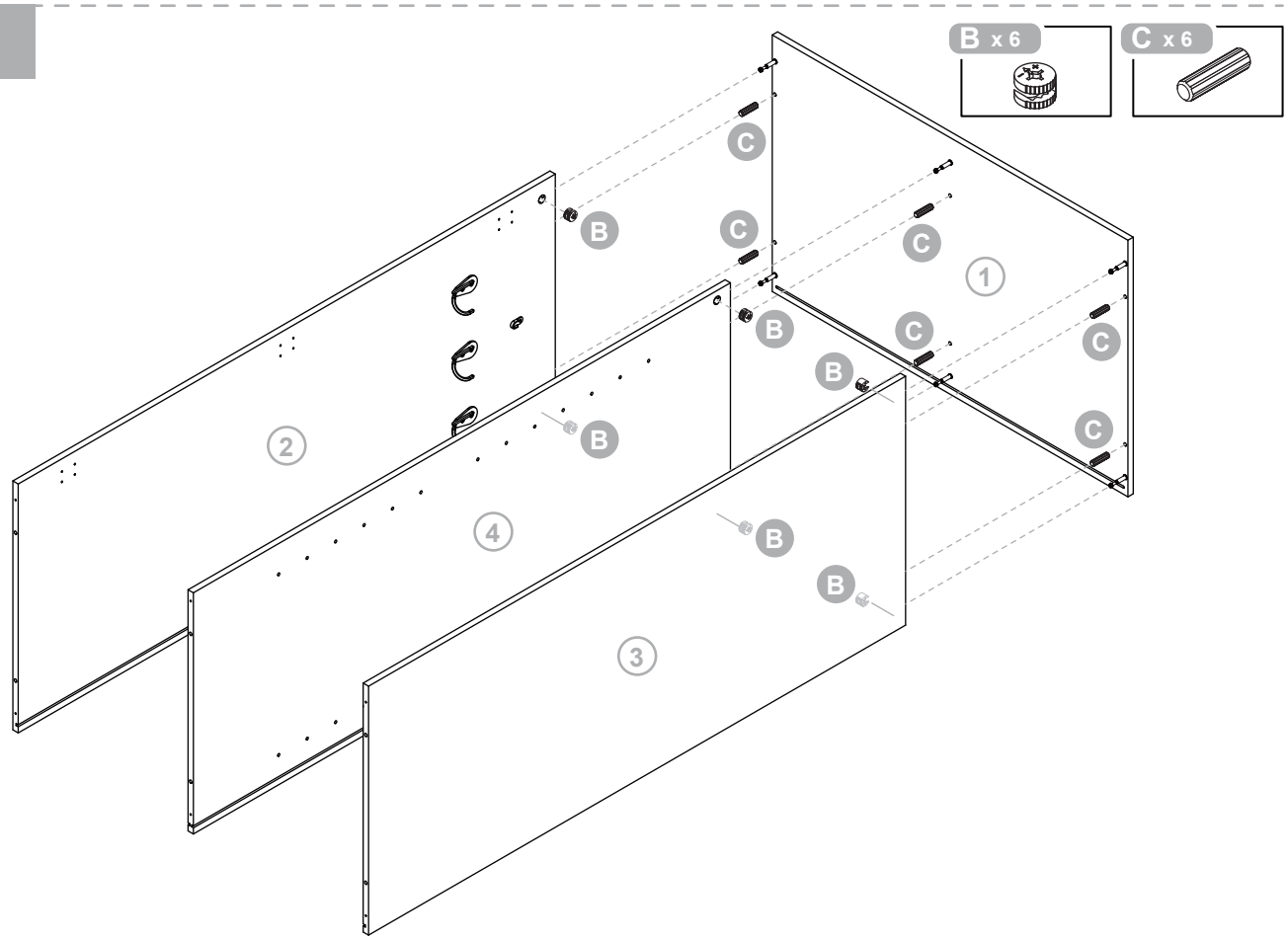

6

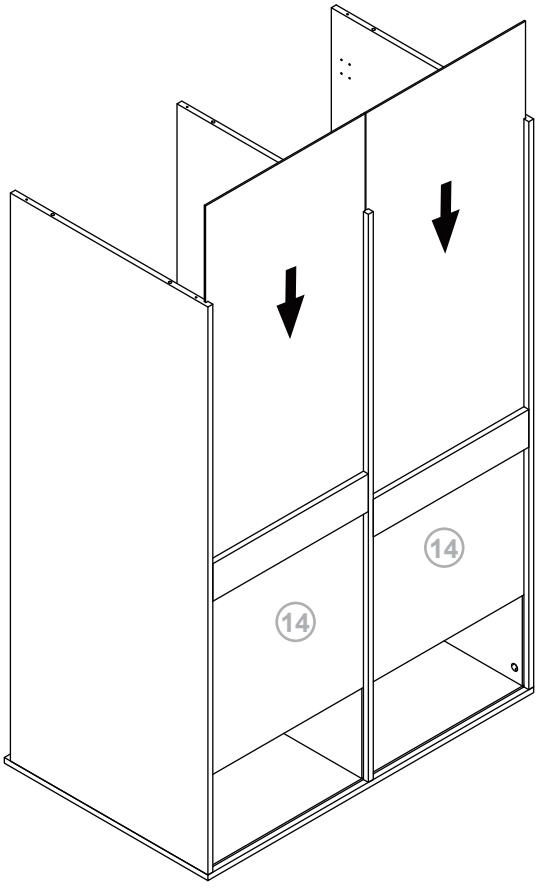

7

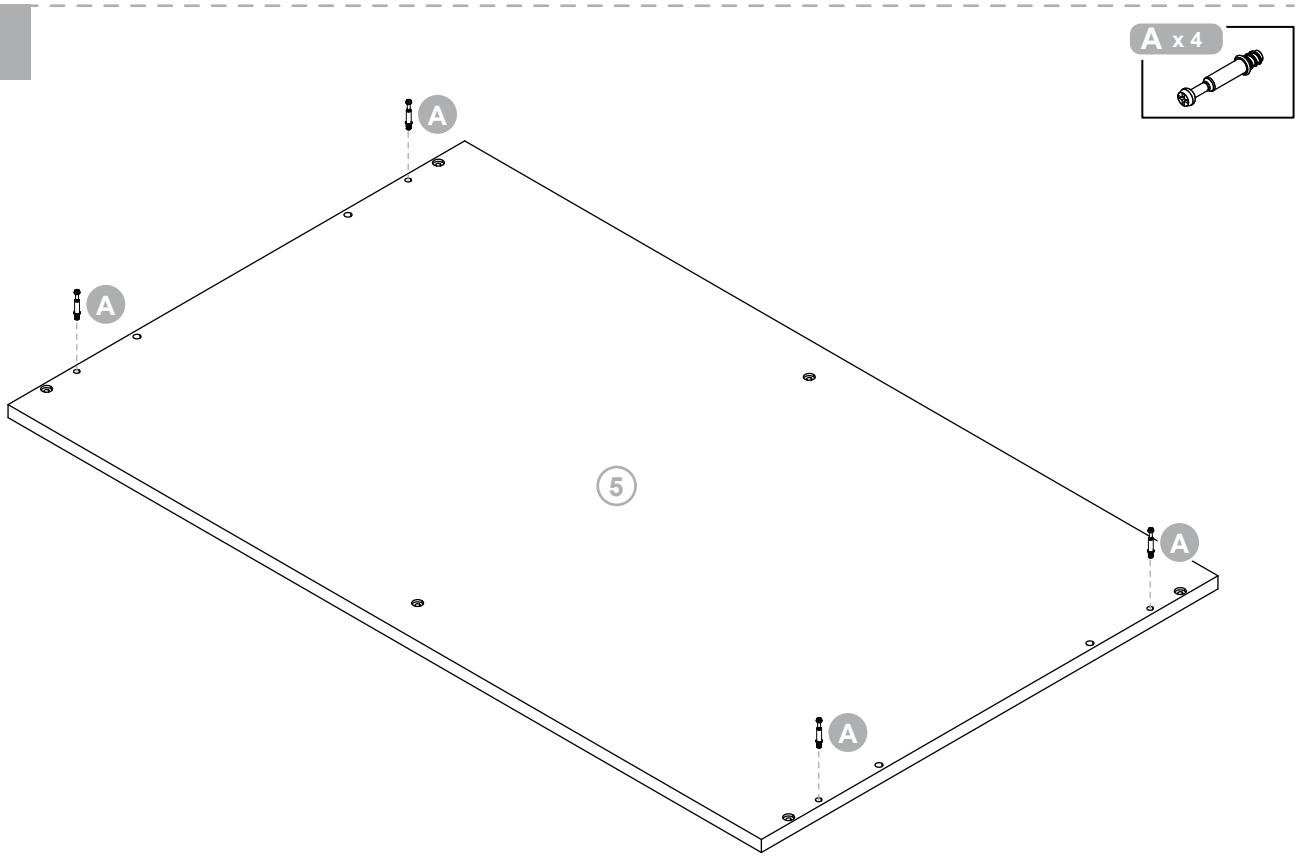

8

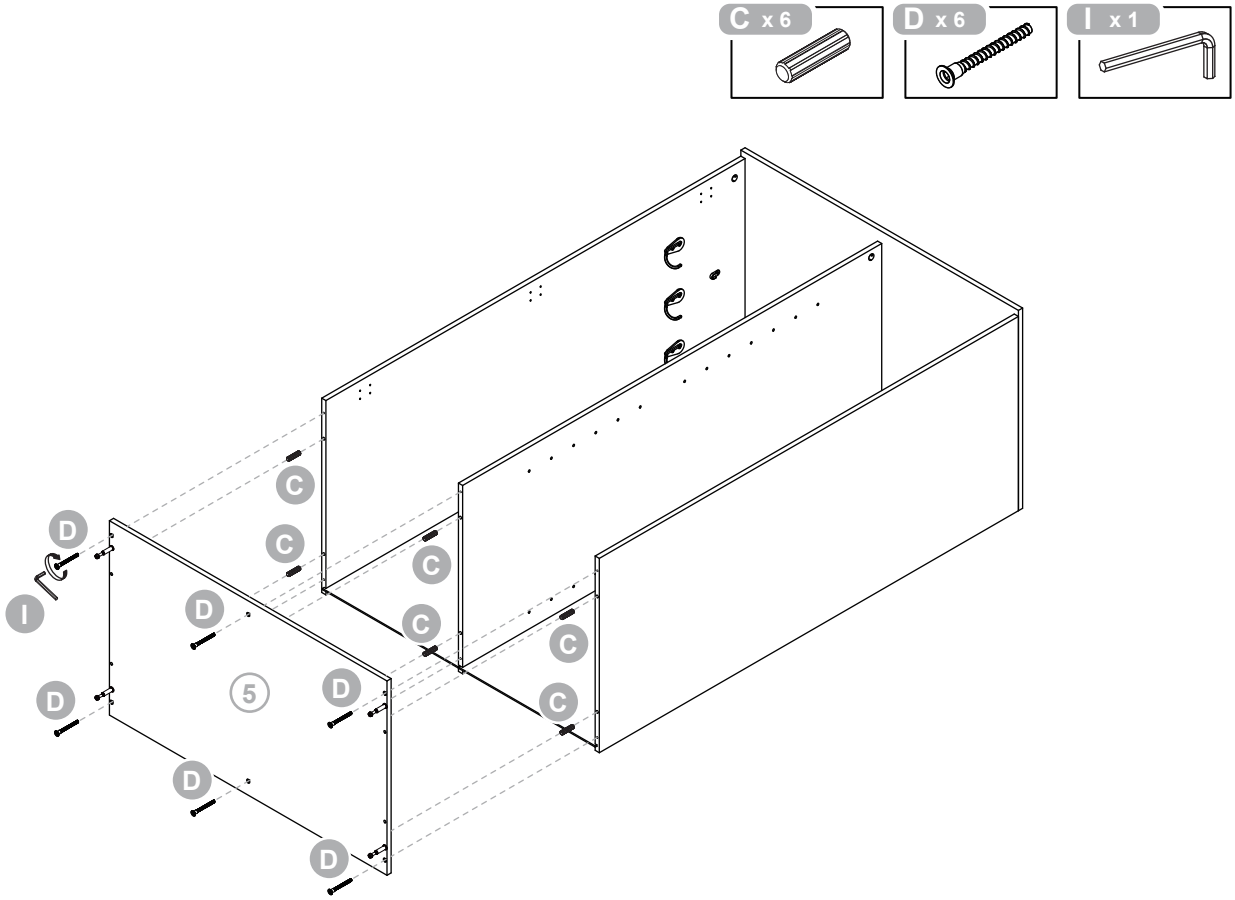

9

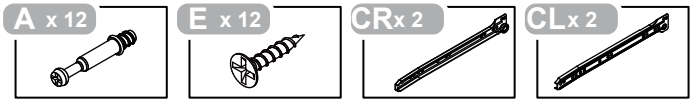
A x 12
E x 12
CRx 2
CLx 2

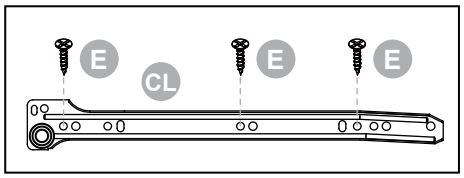
E
CL
E
E

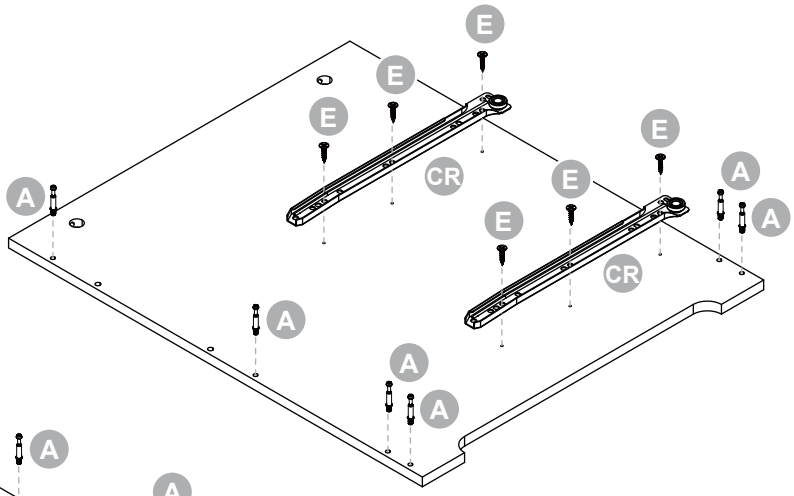
E
E
E
CR
E
E
A
A
E
CR
A
A
A
A

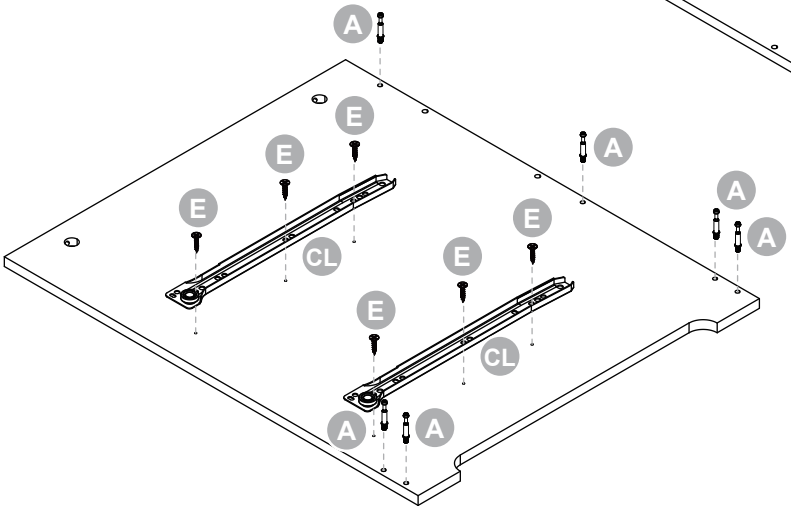
A
E
E
E
CL
E
E
CL
A
A
A
A
A

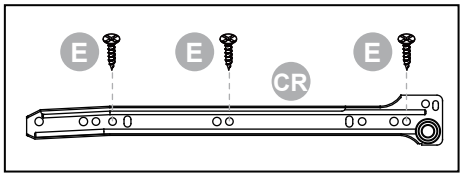
E
E
E
CR

10

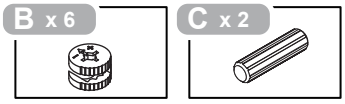
B x 6
C x 2

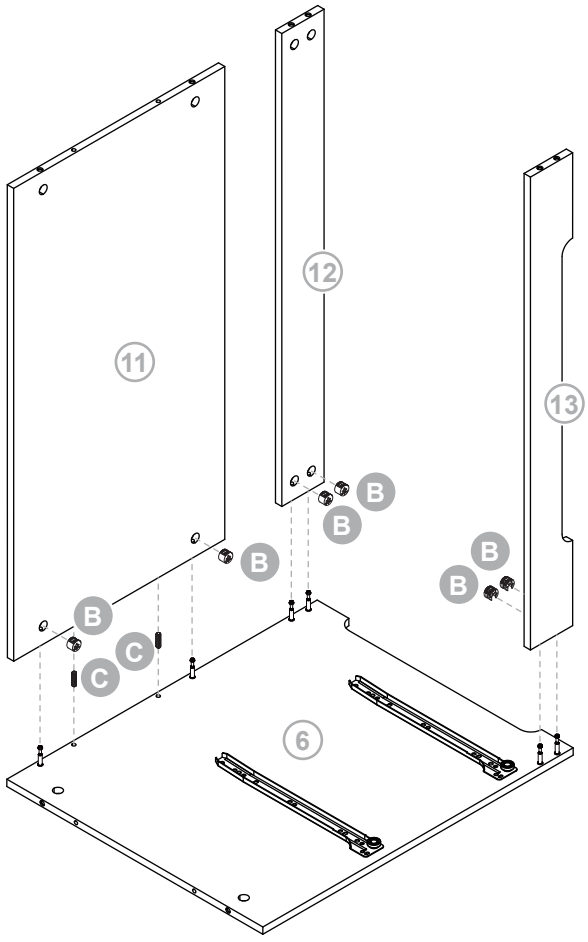
11
12
13
B
B
B
B
B
B
C
C
6

11

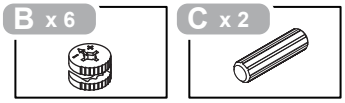

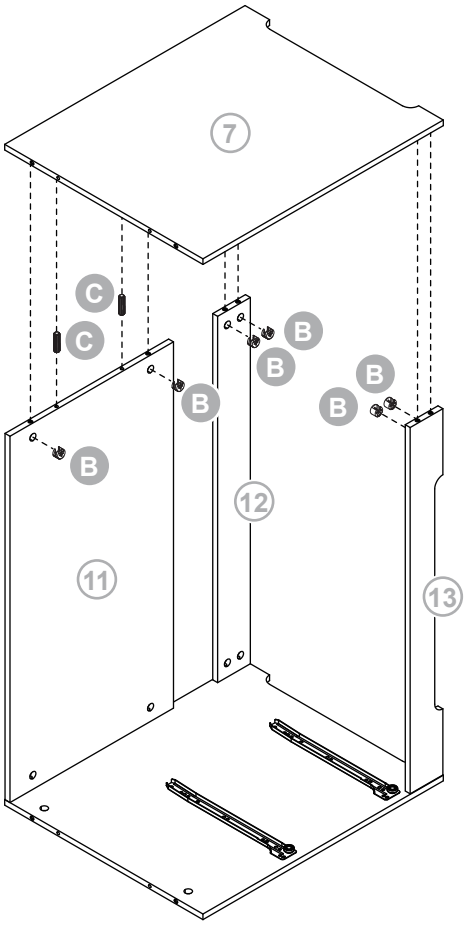

12

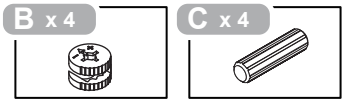

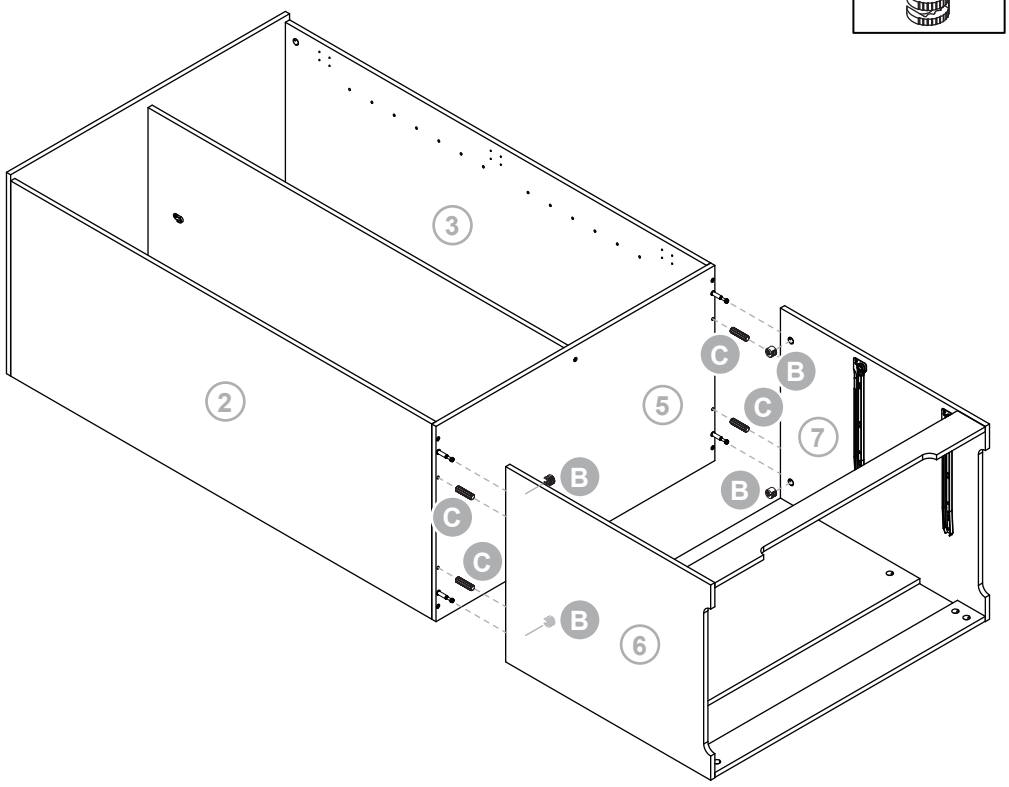

13

Q x 12

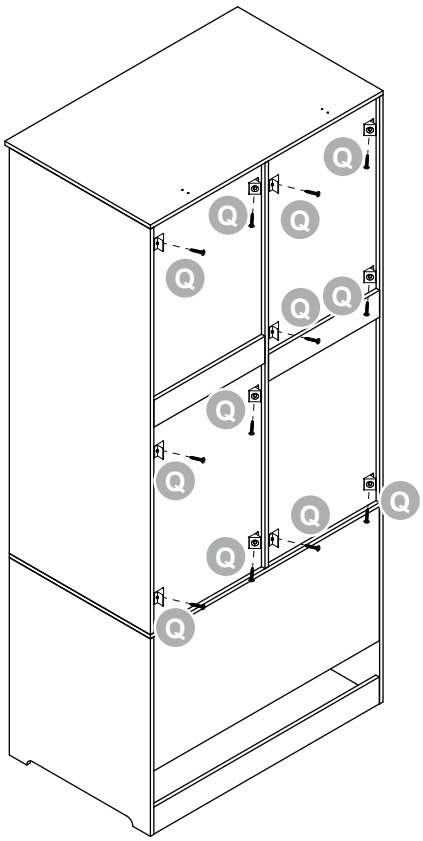

14

F x 2 G x 4 L x 6 M x 12

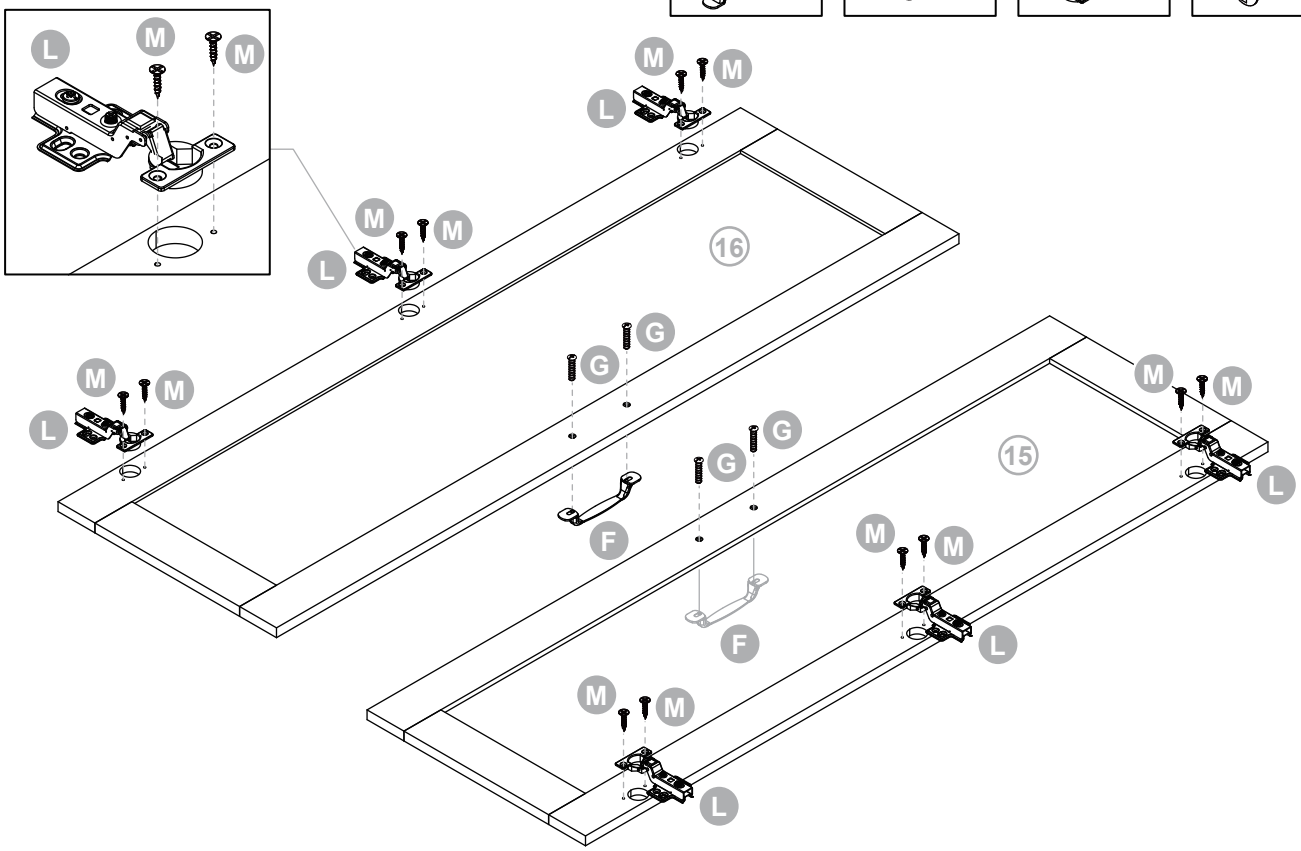

15

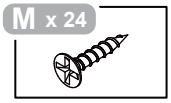

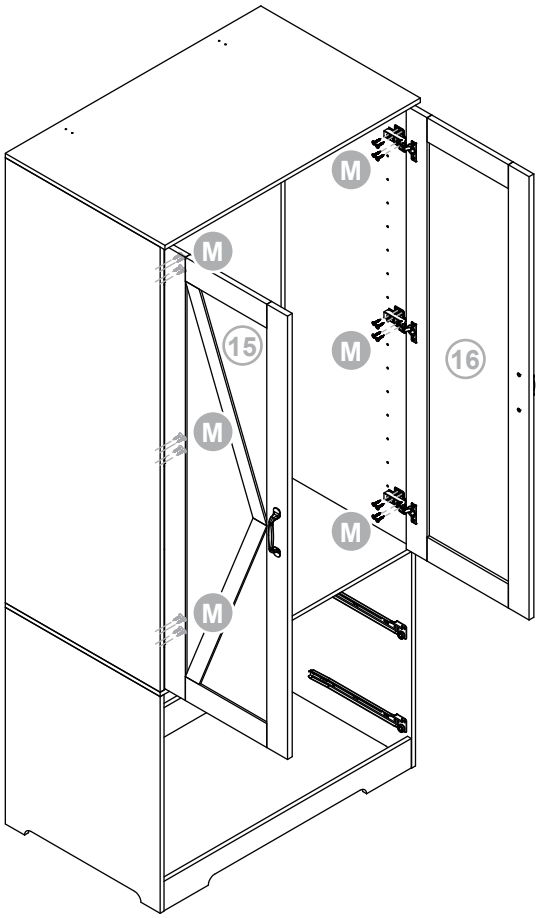

16

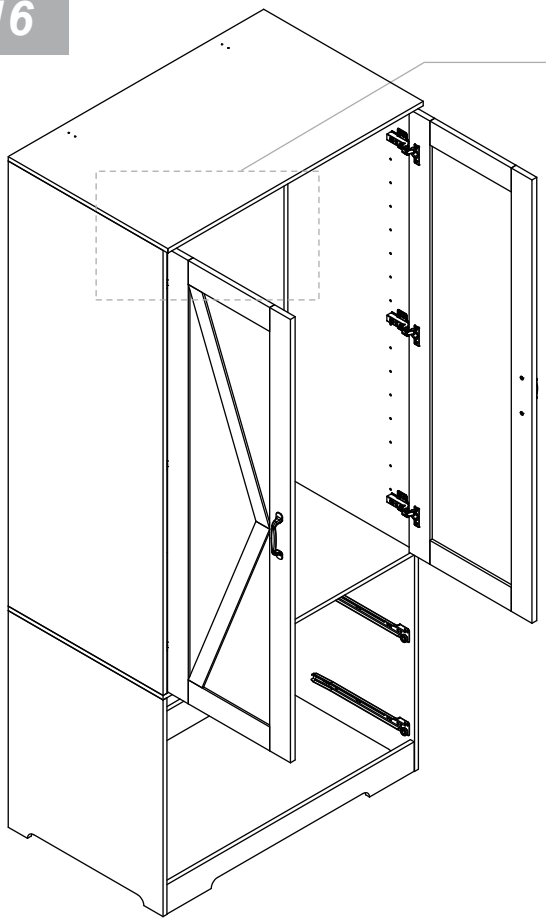

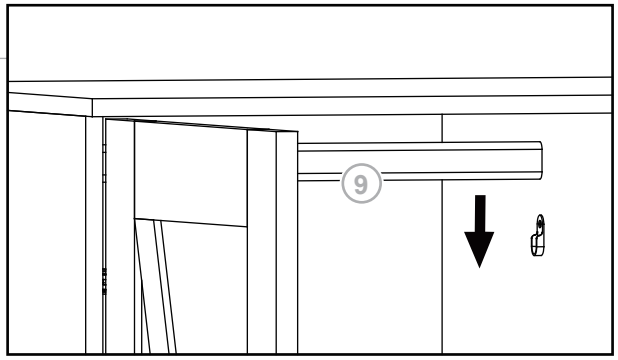

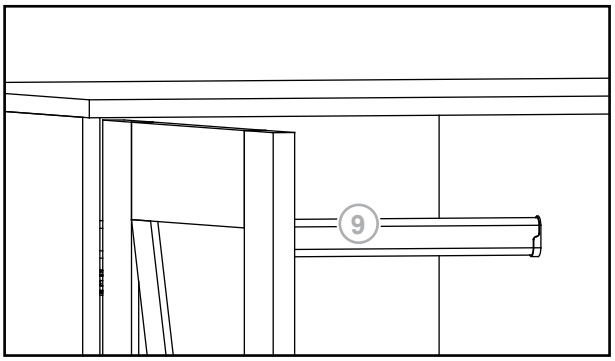

17

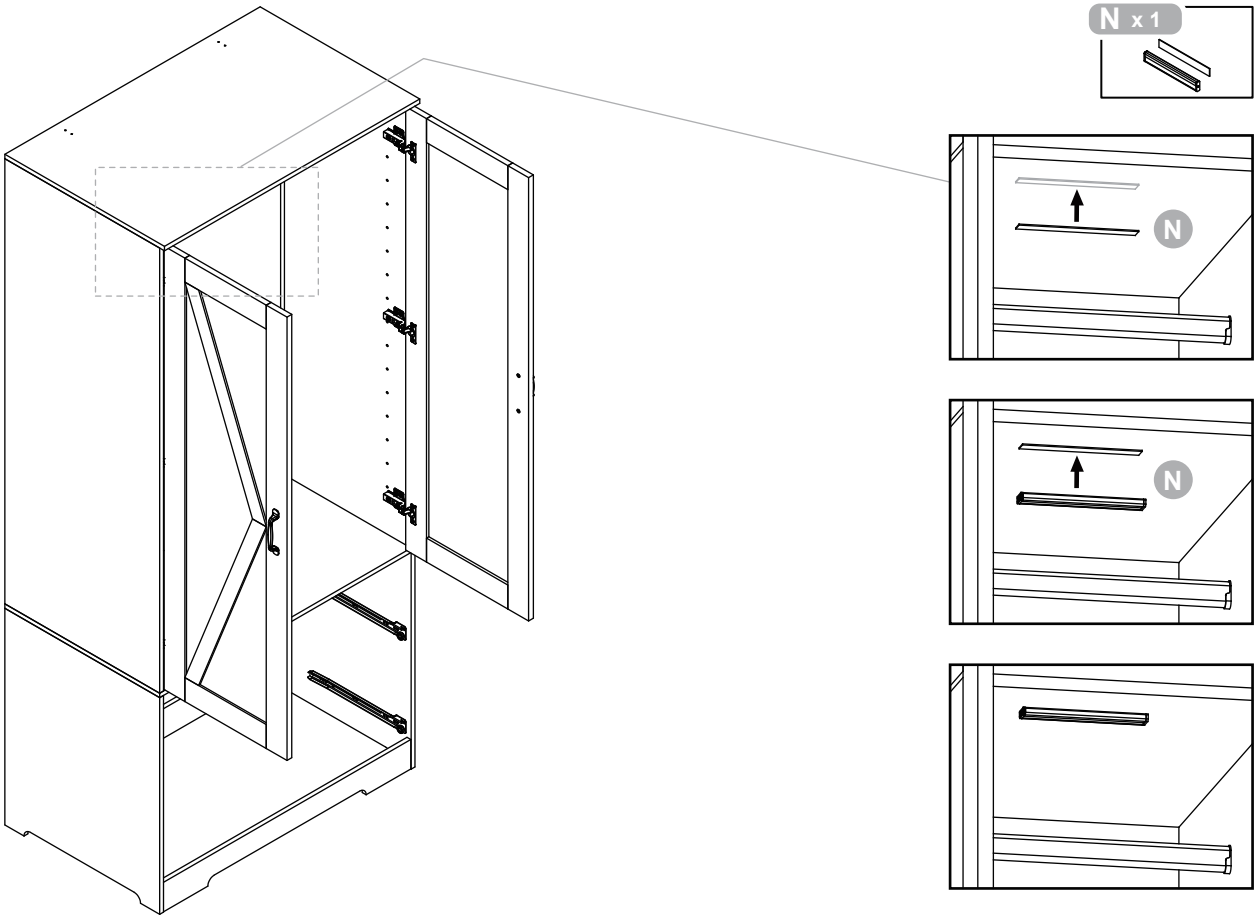

18

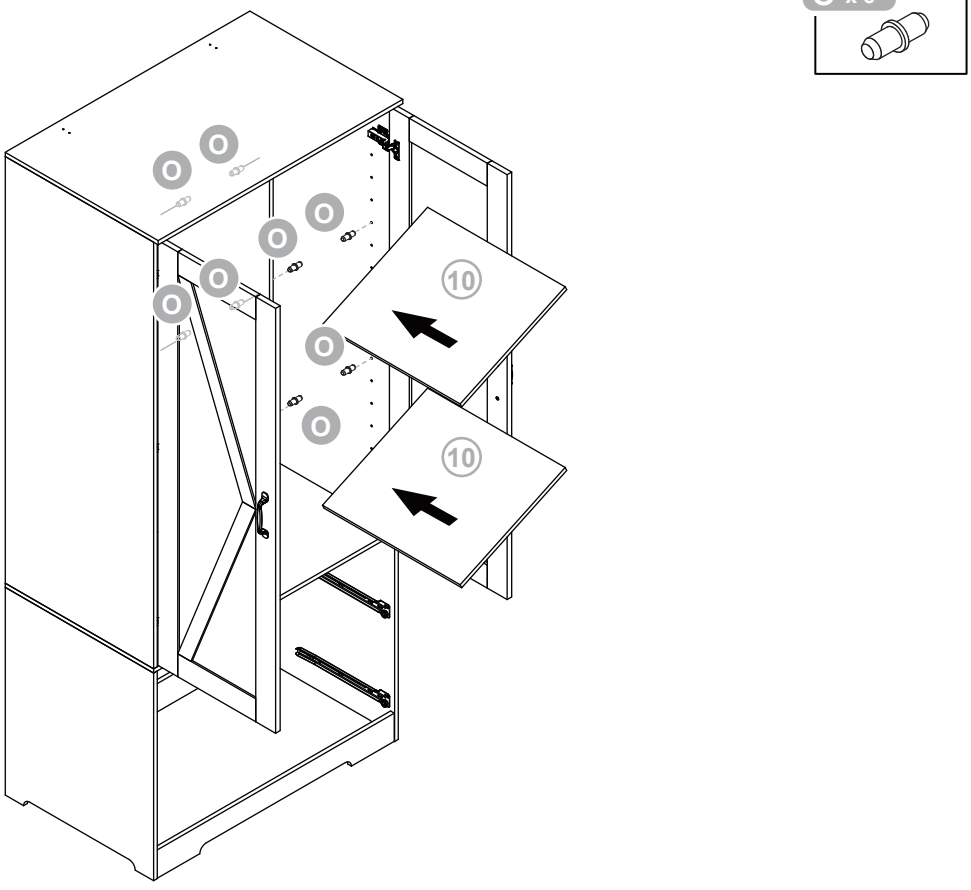

19

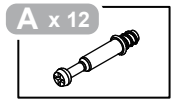

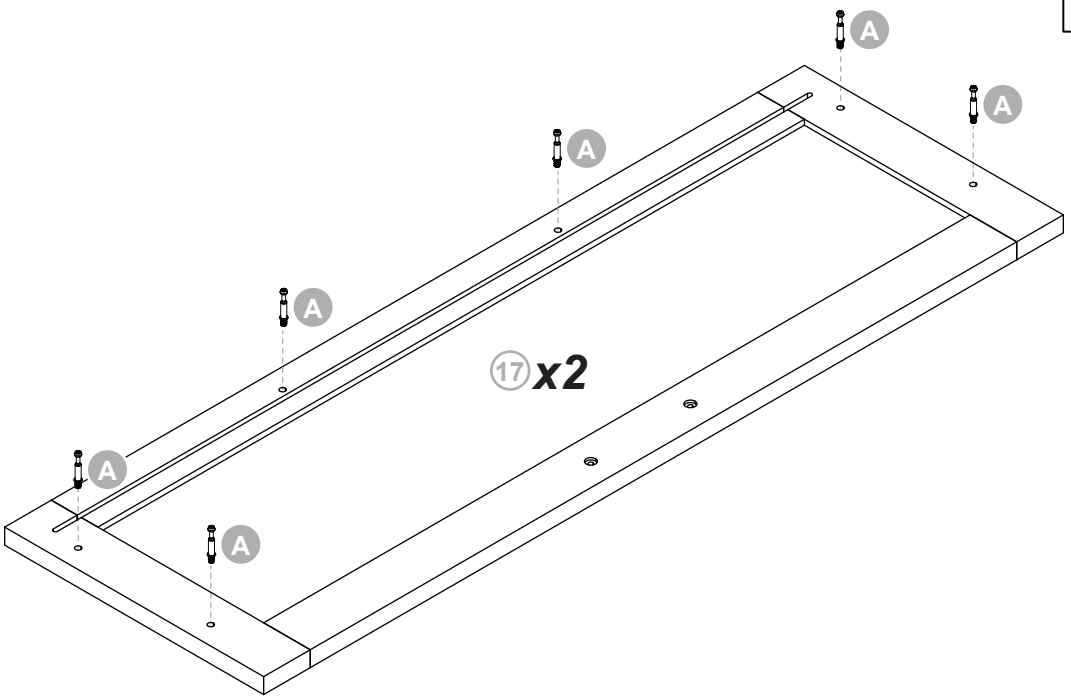

20

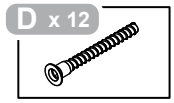

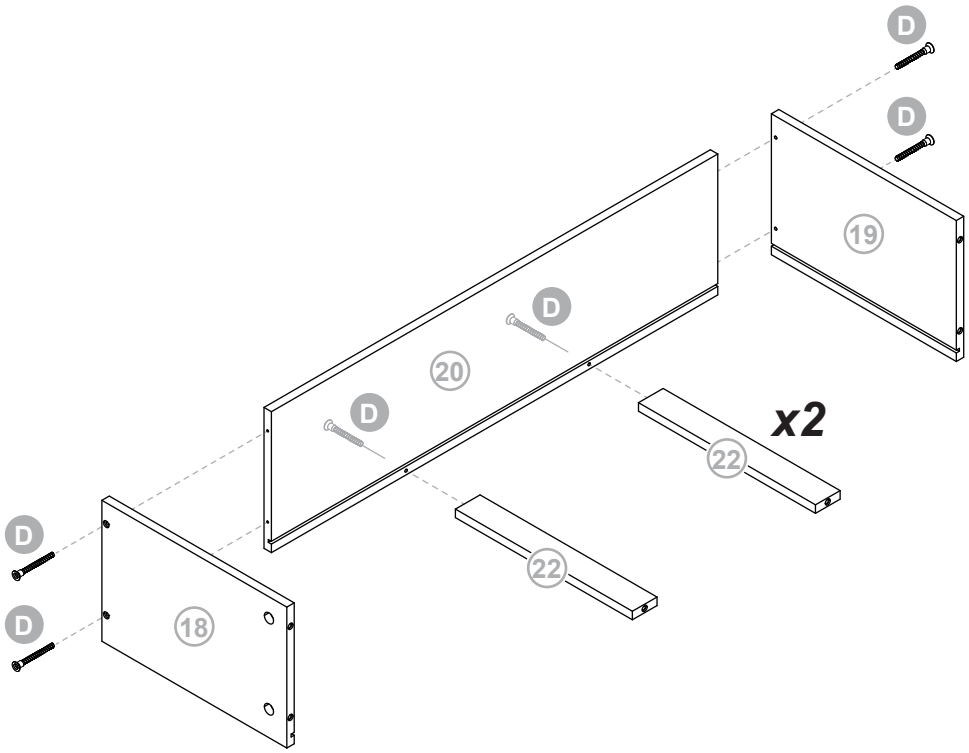

21

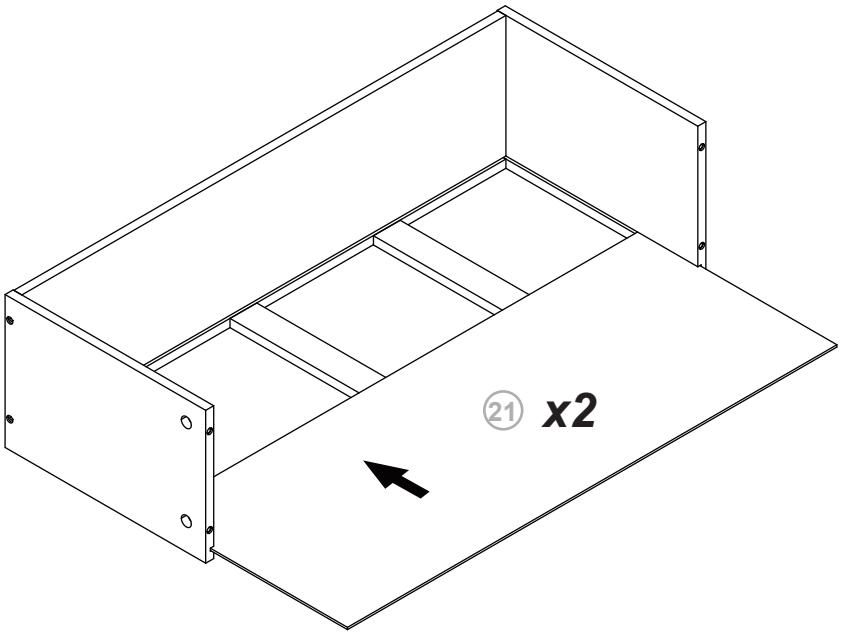

22

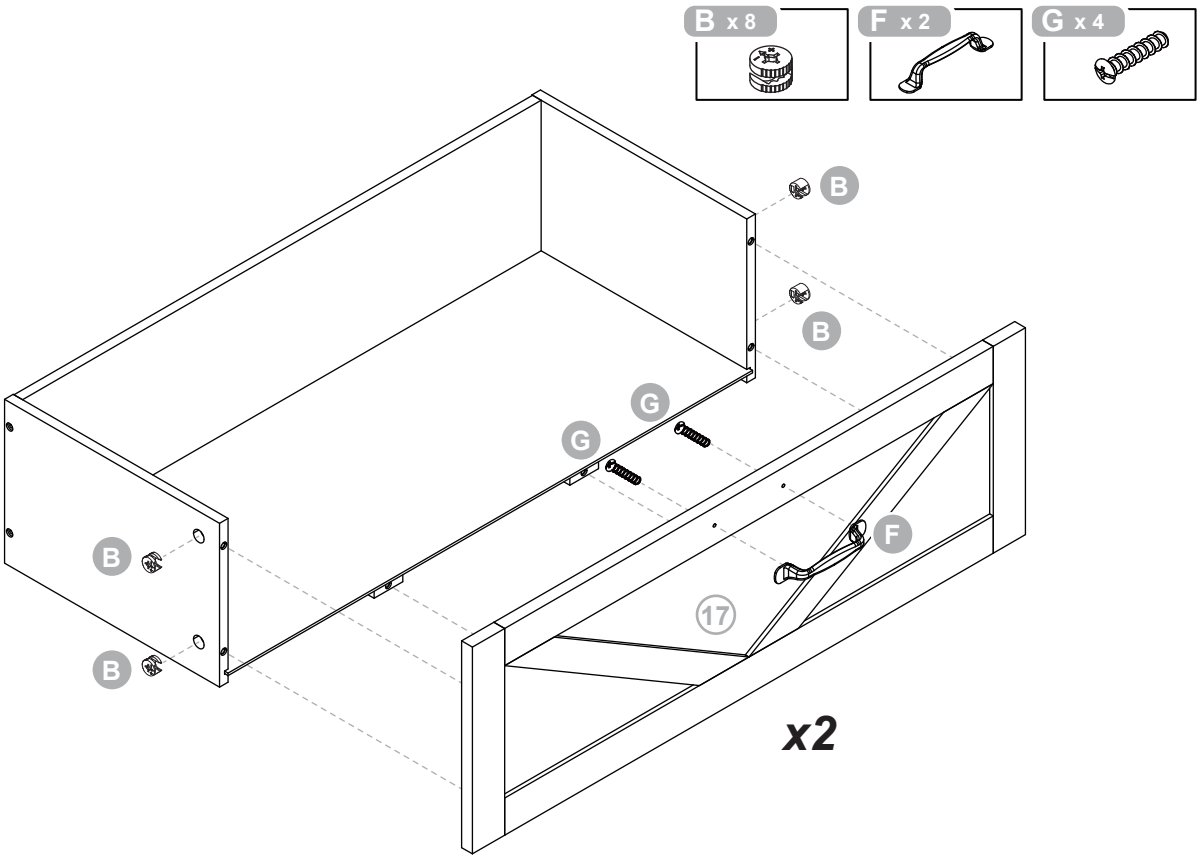

23

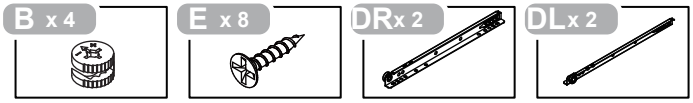

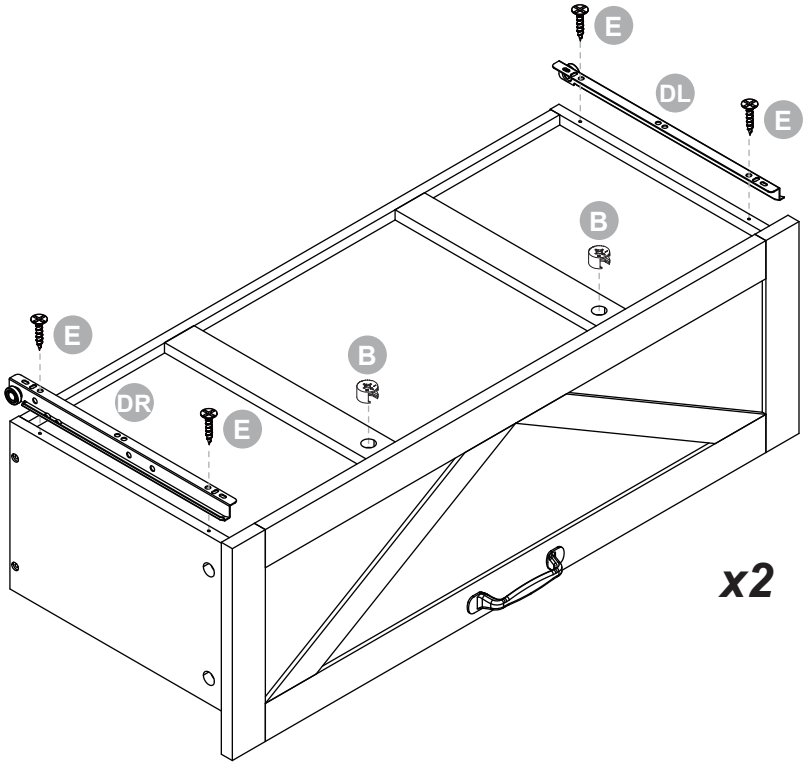

24

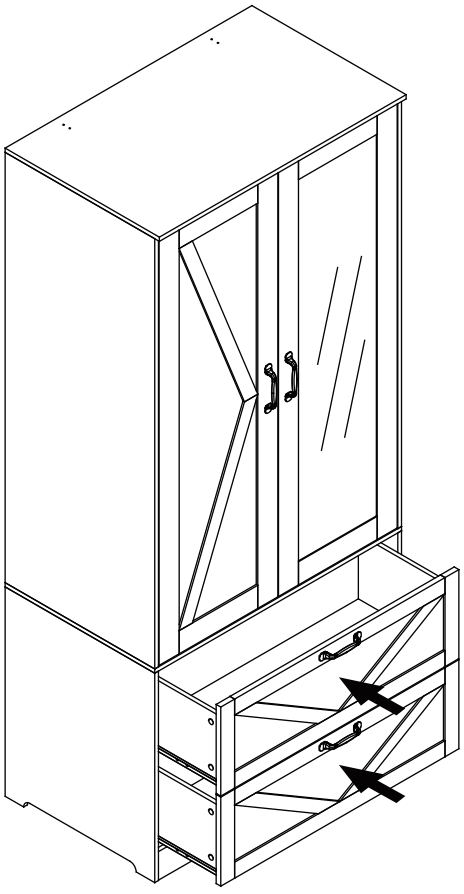

25

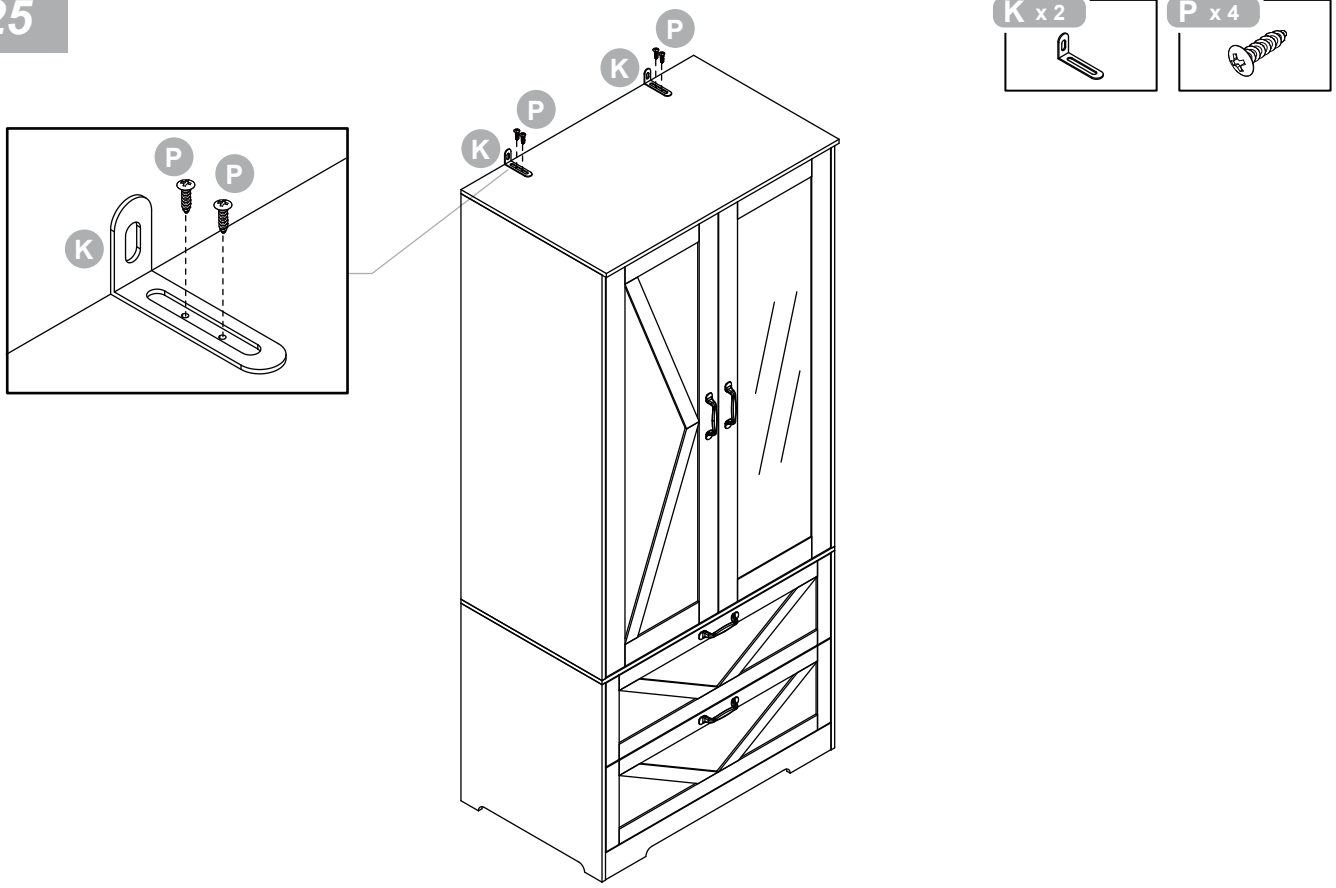

26

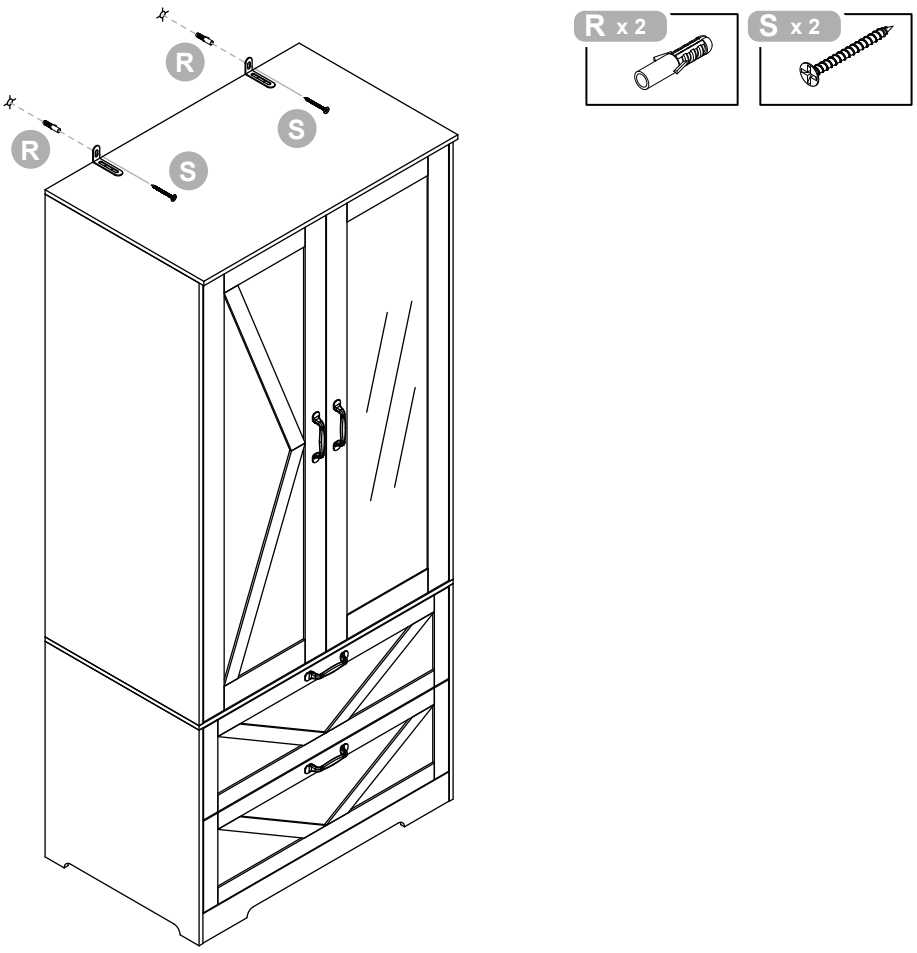

27

Customer Attention:
To align doors and control gap in between doors. Product doors may need adjusting during and after assembly.
This can be done by adjusting appropriate screws. See below illustration.

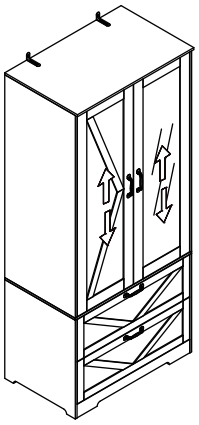

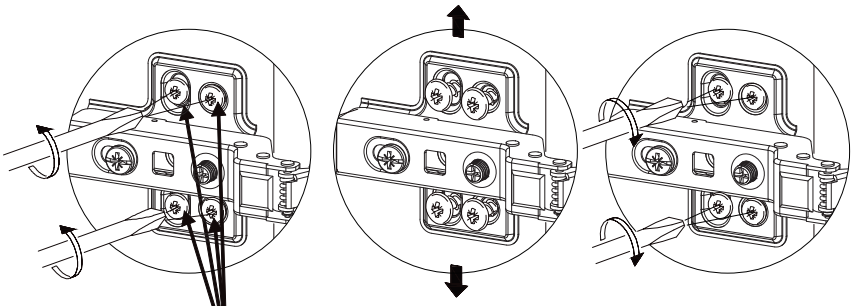

Vertical Door Adjustment:
Loosen both screws on all hinges and lift the door to the desired height.
This allows an even space at the top and bottom between the door and frame.

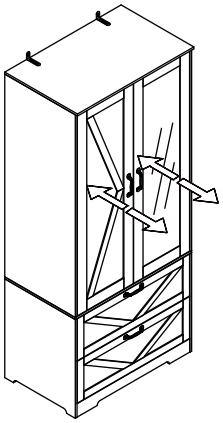

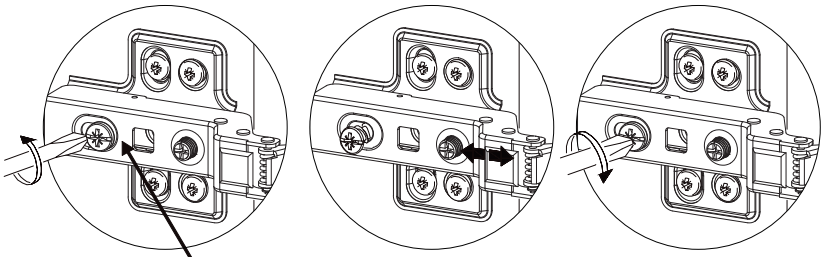

Lateral Door Adjustment:
If door is hinge bound, (rubbing on frame as you close or open door) loosening screw shown and move the door in approriate direction. (In or out)

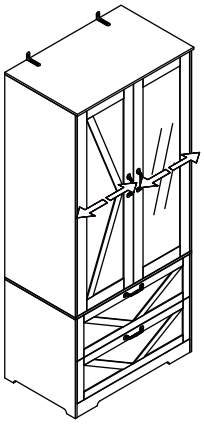

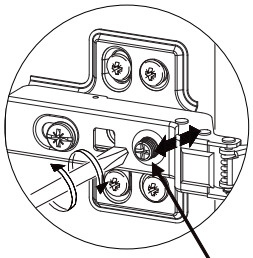

Horizontal Door Adjustment:
Rotate Screw clockwise or anticlockwise.
This will produce an even gap between doors and frame.