FINE FIXTURES

206 Wembly Road
New Windsor, NY 12553
Phone: 718.602.6060
Fax: 718.963.2082
info@finefixtures.com
www.finefixtures.com

SPECIFICATIONS / TECHNICAL DATA

SHOWER ENCLOSURE

HINGED FRAMELESS

40” x 40”

Shower Door dimensions when installed on compatible Shower Base.

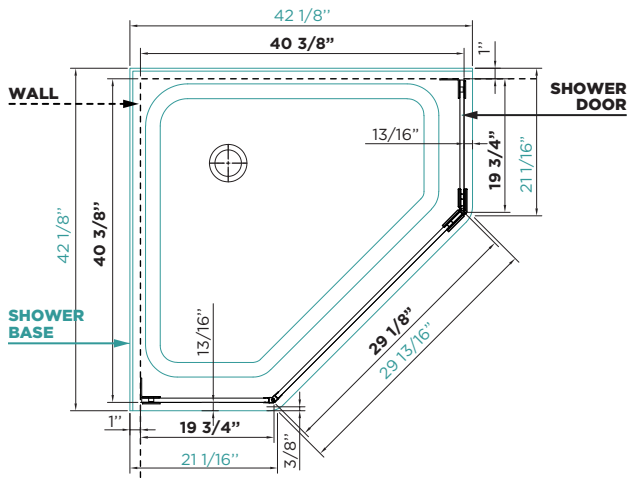

Door Size: 40 3/8” x 40 3/8”
Base Size: 42” x 42” (SBA4242W-NA)

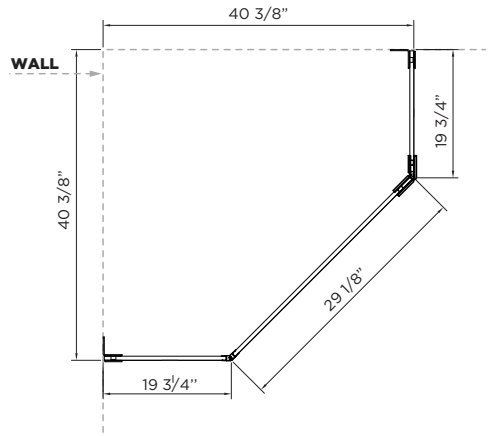

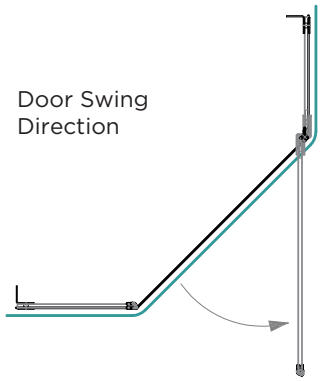

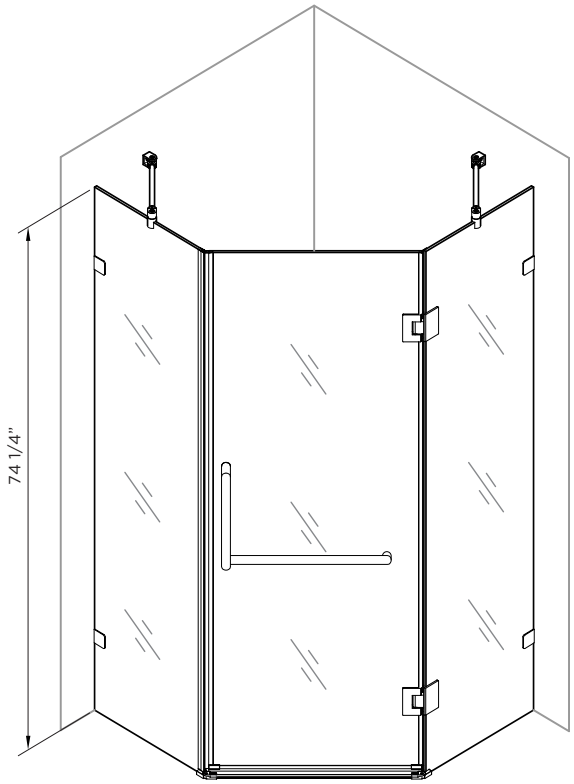

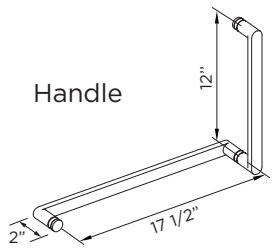

ATTENTION! Dimensions may vary by up to 3/8”. It is highly recommended to pull all dimensions of actual model for installation and measuring purposes.

MODEL# SDJ42