ASSEMBLY INSTRUCTIONS

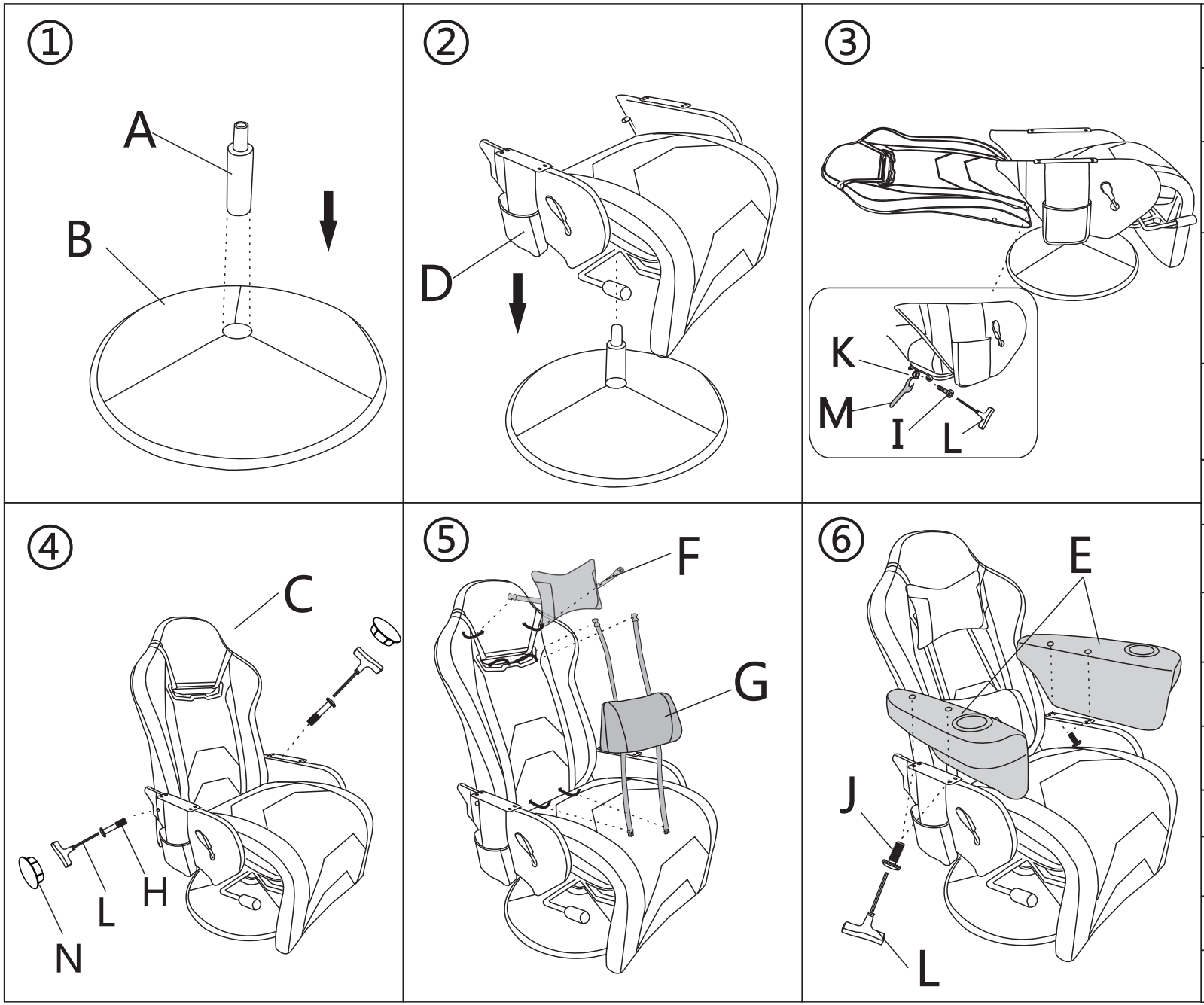

A		1PC
B		1PC
C		1PC
D		1PC
E		1PAIR
F		1PC
G		1PC
H	M8*55	2PCS
I	M8*25	2PCS
J	M6*20	4PCS
K		2PCS
L		1PC
M		1PC
N		2PCS
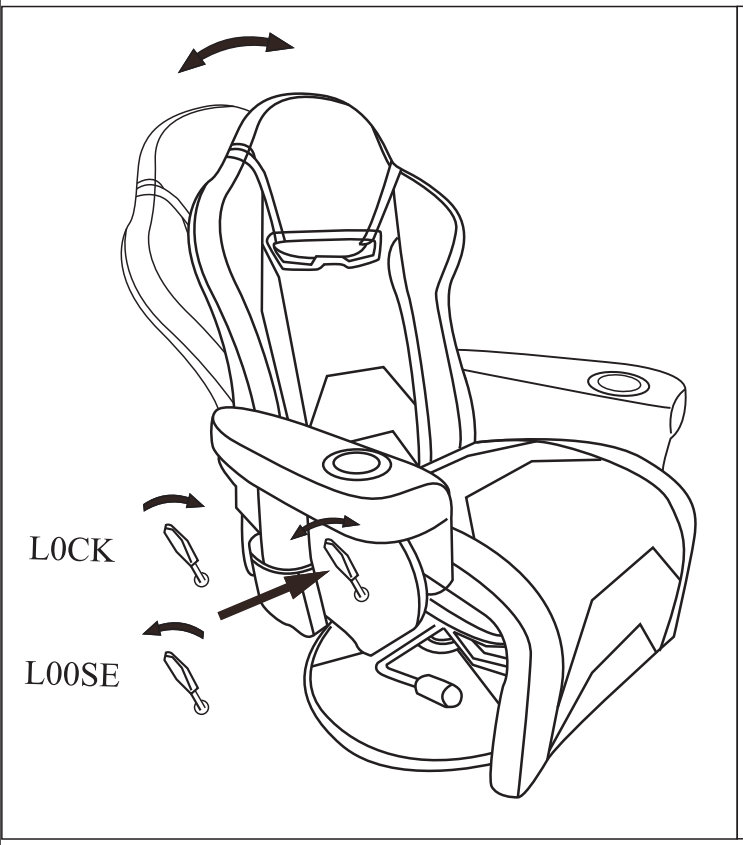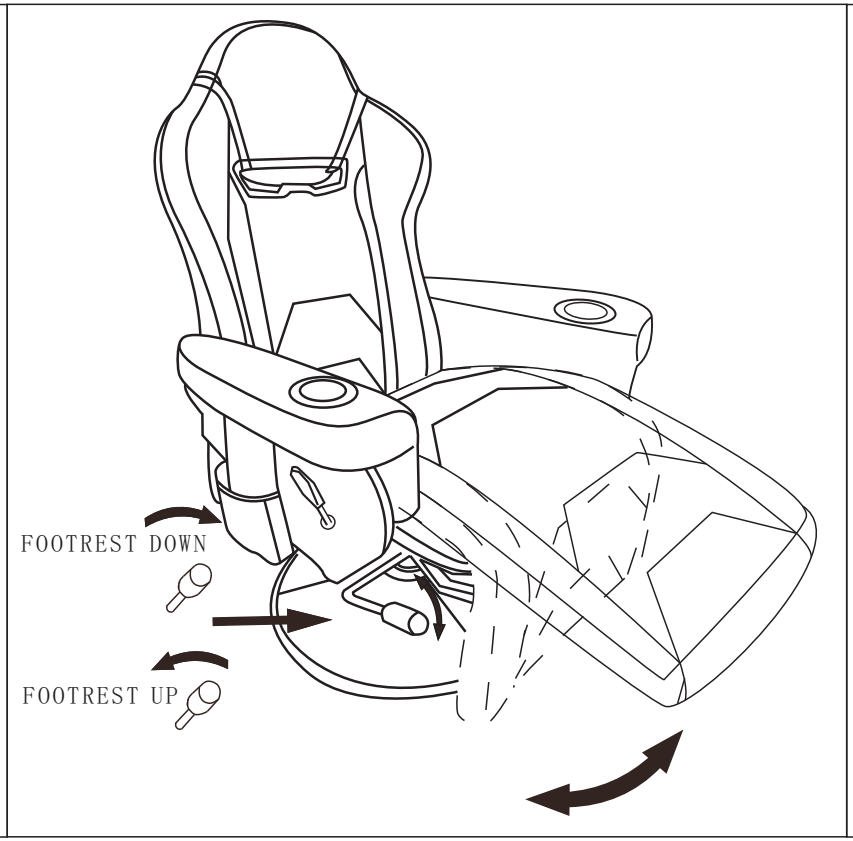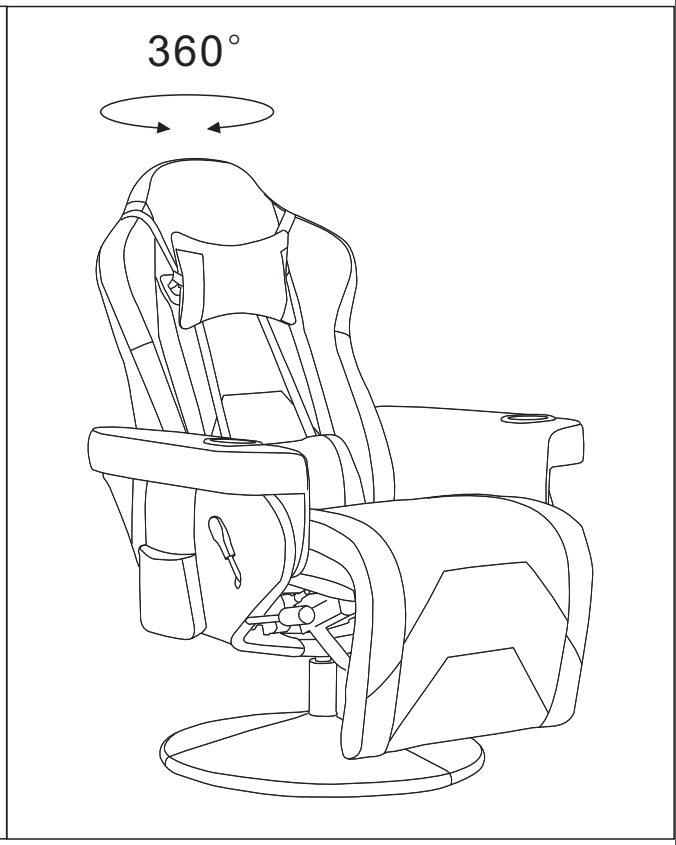
CONTROL INSTRUCTIONS