3'X5'FT
METAL GARDEN SHED

INSTRUCTIONS FOR ASSEMBLY

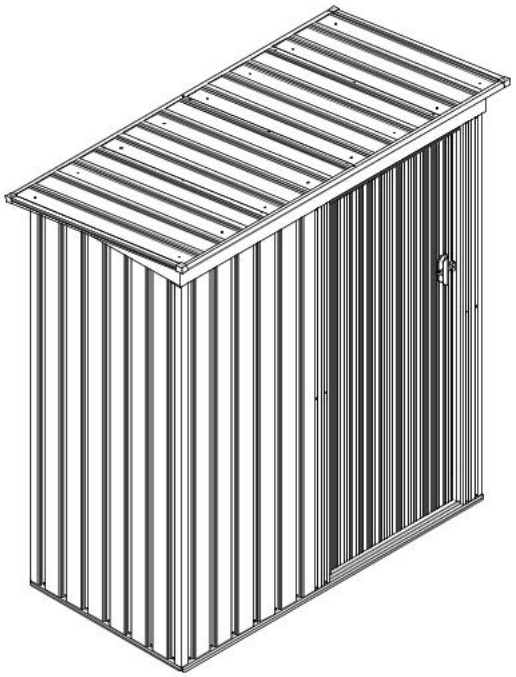

Requires two people and takes 2-3 hours for Installation.

Tall Walk in Shed
Quick &Easy Assembly
Ridge Reinforced Walls
Available in Various Sizes

PLAN AHEAD

Before beginning installation, check local building codes reg arding footings, location and other requirements.
Study and understand this instruction.
Important information and helpful tips will make your installation easier and more enjoyable.

Tools and Materials: There are some basic tools and materi als you will need for the installation. Decide which method of anchoring and the type of foundation you wish to use in order to form a complete list of the materials you will need.

BEFORE YOU BEGIN

Assembly Instruction: Instructions are supplied in this man ual and contain all appropriate information for your installati on. Review all instructions before you begin, and during assembly, follow the step sequence carefully for correct results.

Parts List: Check to be sure that you have all the necessary parts and quantities in your package.These are packaged within the carton. Note that extra fasteners have been supplied for your convenience.

Explosion Diagram: All parts except screws and bolts are shown in this diagram, review all parts before you begin. Familiarize yourself with the hardware and fasteners for easier use during installation.

NO.	PART	Qty.
16		1
17		1
25R		1
25L		1
P1		1
P1A		1
P1D		1
P2		3
P3		3
P4B		1
P5		3
P7		1
D1R	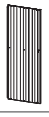	1
D1L	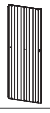	1

NO.	PART	Qty.
1		2
3		1
4		1
6		1
7		1
9		2
10		1
12L		1
15		2
20U		1
20D		1
21R	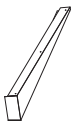	1
21L	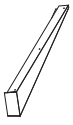	1

NO.	PART	Qty.
S1		122
G2	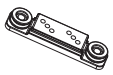	2
GB		1
GC		4
GD		2
V2		122
F1		142
F2		22
F3		4
F6		4

PART	NO.	Qty.
	S1	122

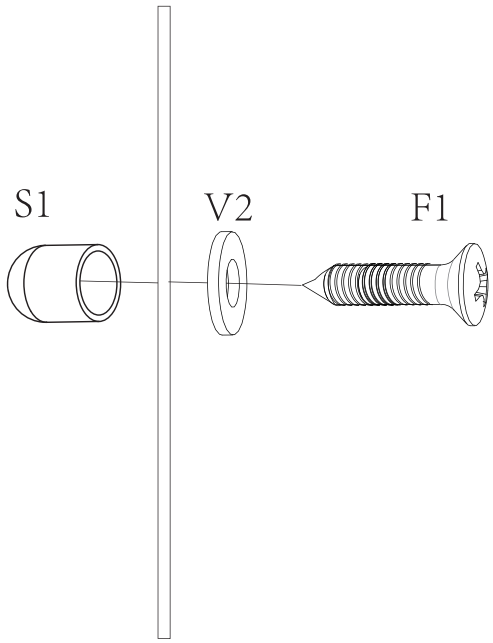

Reminder: Tighten each screw, and then put the screw cap to prevent scratches

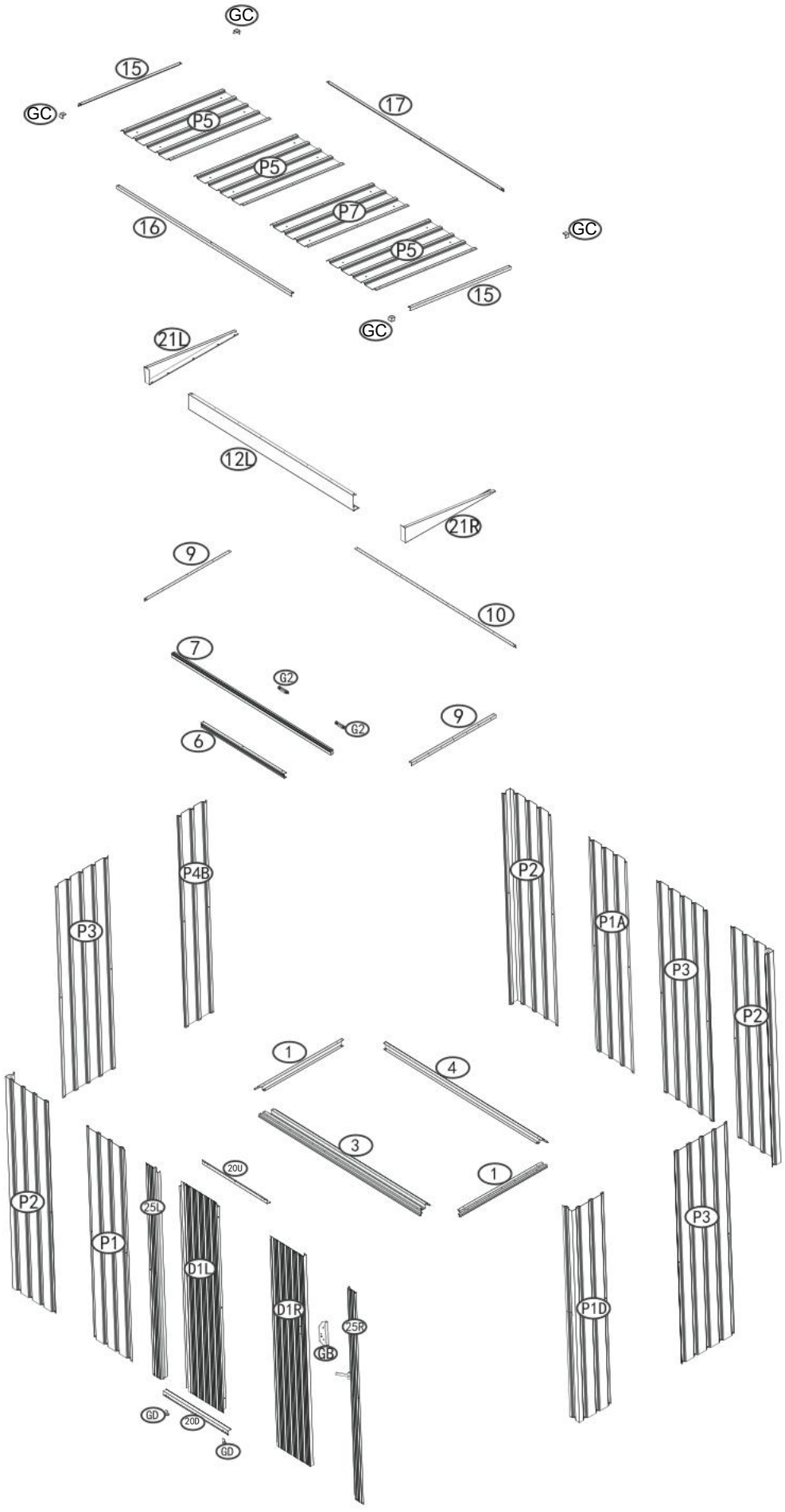
GC
15
GC
P5
17
P5
P7
16
GC
P5
15
GC
21L
12L
21R
9
10
7
G2
G2
9
6
P4B
P3
P2
P1A
P3
P2
1
4
3
1
20U
P2
25L
P1
D1L
D1R
25R
GB
P1D
P3
GD
20D
GD

PART	NO.	Qty.
	3	1
	1	1
	F1	2
	V2	2

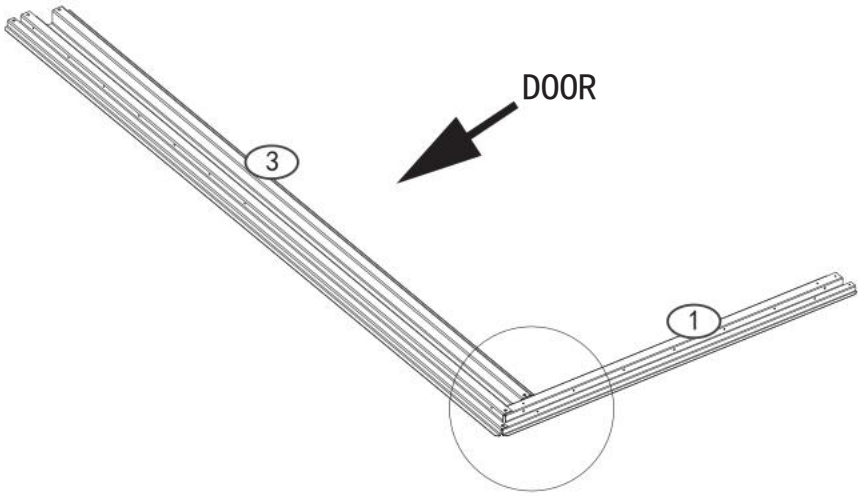

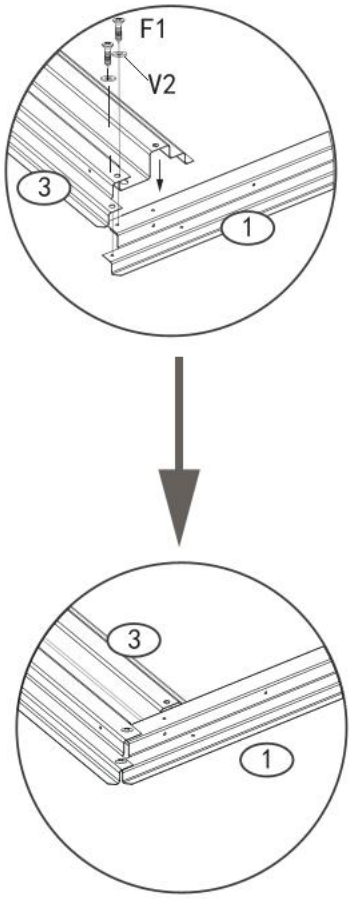

PART	NO.	Qty.
	1	1
	F1	2
	V2	2

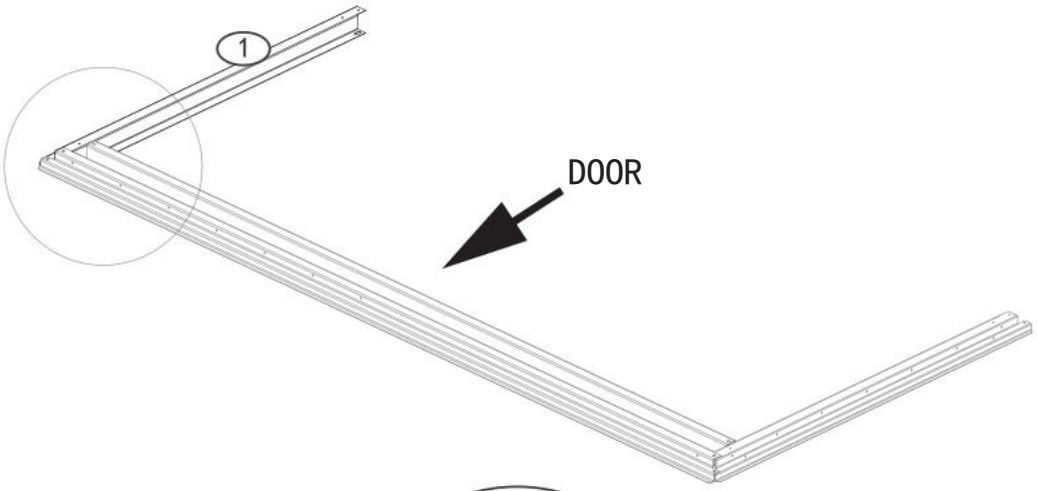

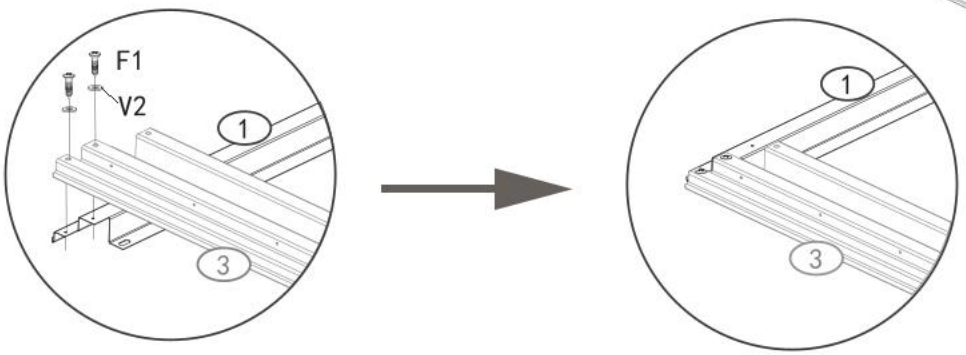

PART	NO.	Qty.
	4	1
	F1	4
	V2	4

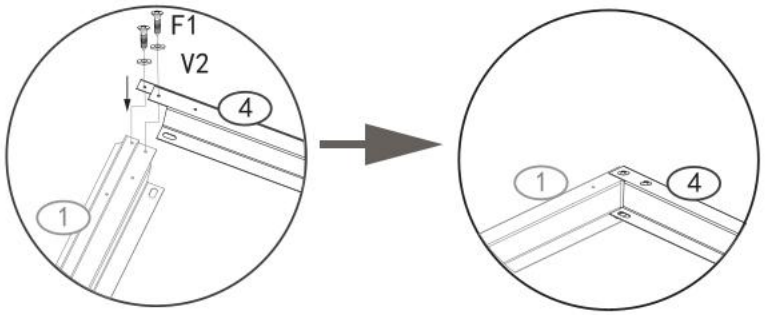

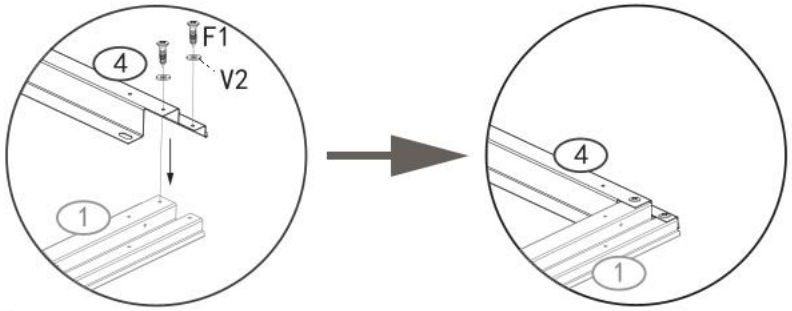

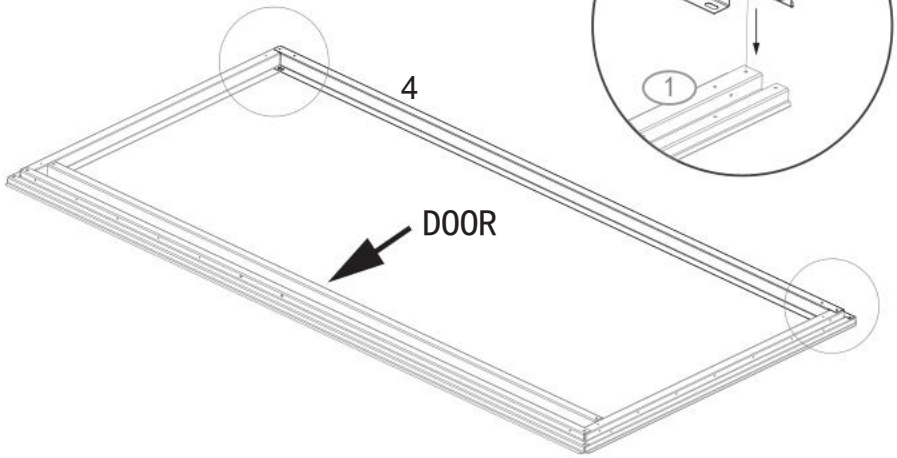

PART	NO.	Qty.
	P1D	1
	F1	3
	V2	3

PART	NO.	Qty.
	P2	1
	F1	3
	V2	3

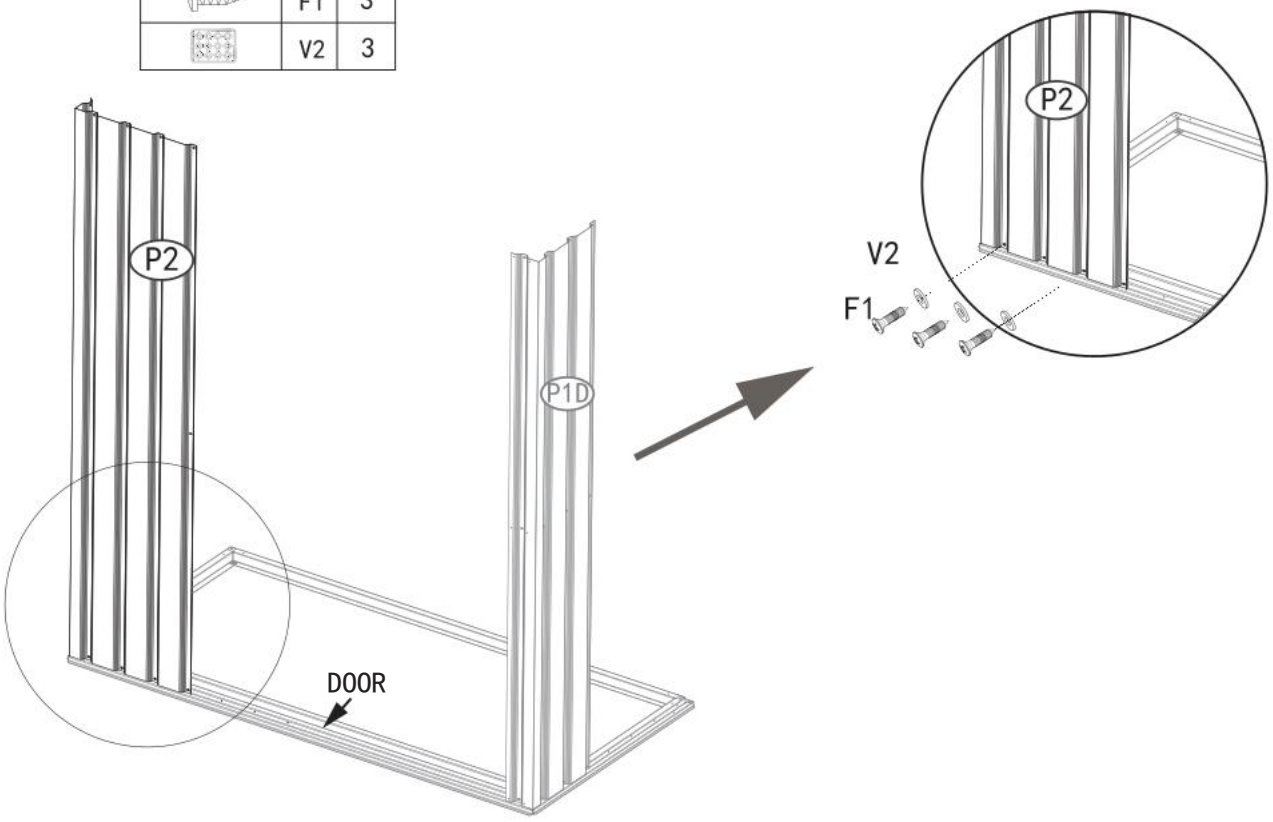

PART	NO.	Qty.
	P2	2
	F1	6
	V2	6

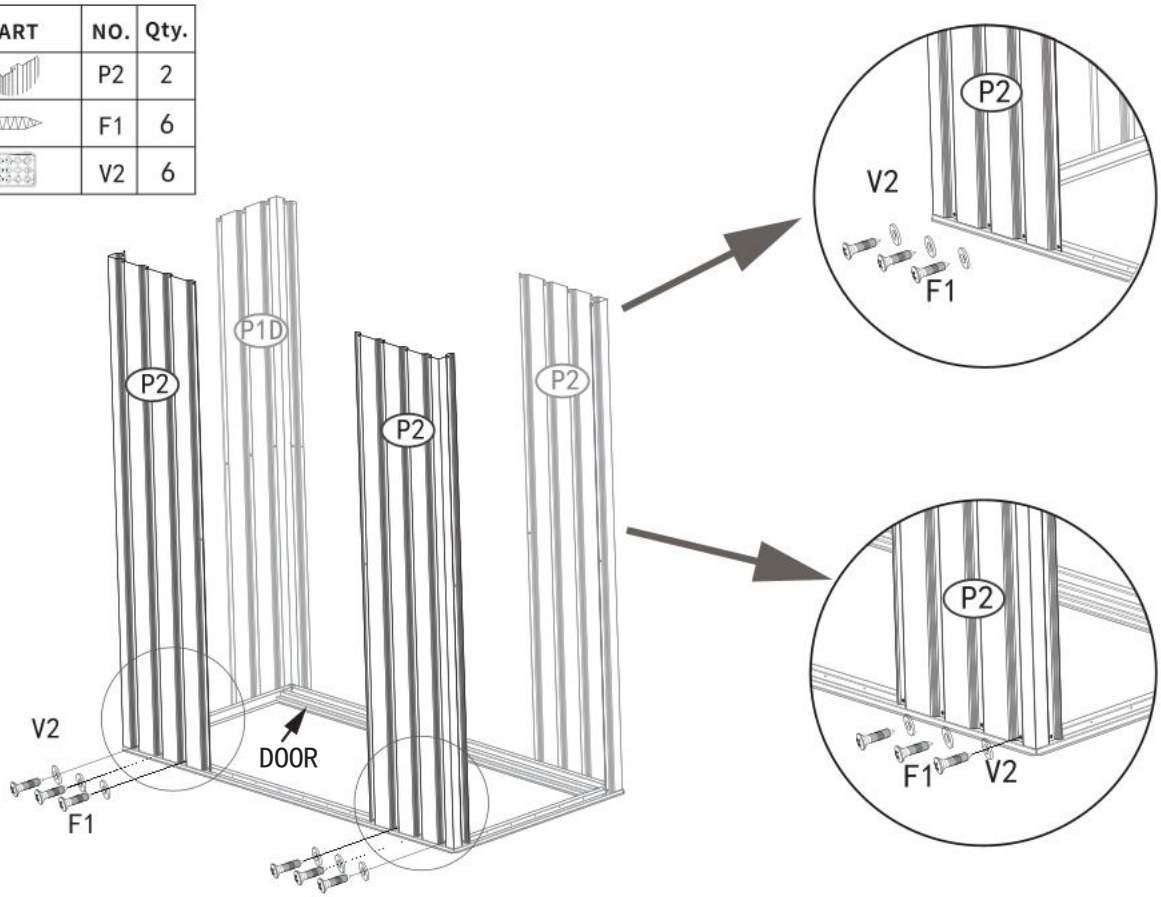

PART	NO.	Qty.
	7	1
	G2	2
	F1	3
	V2	3

PART	NO.	Qty.
	10	1
	F1	6
	V2	6

PART	NO.	Qty.
	9	1
	F1	2
	V2	2

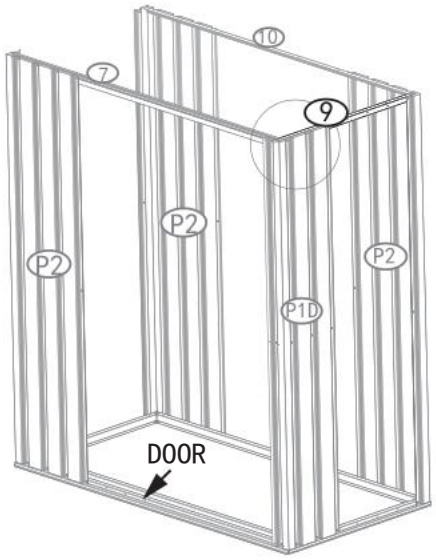

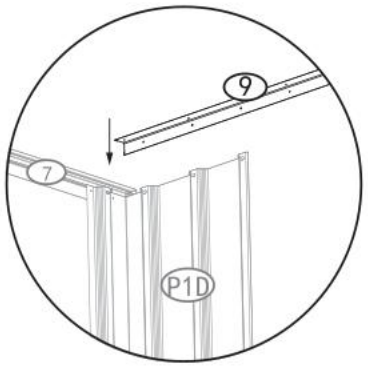

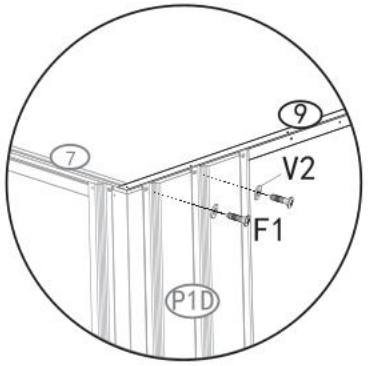

PART	NO.	Qty.
	P3	1
	F2	2
	F1	10
	V2	10

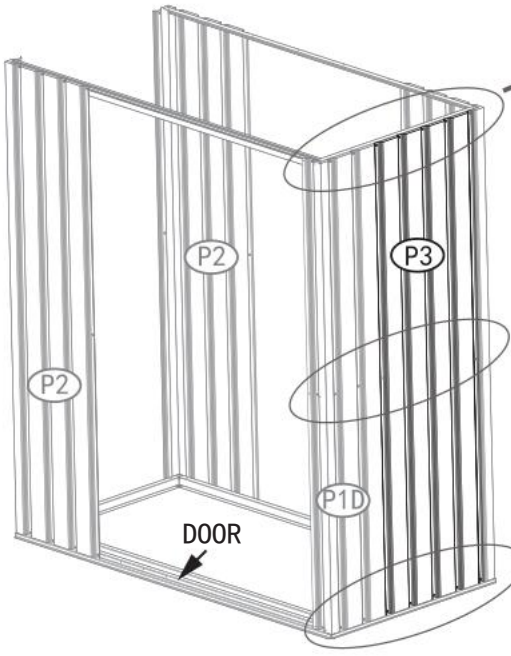

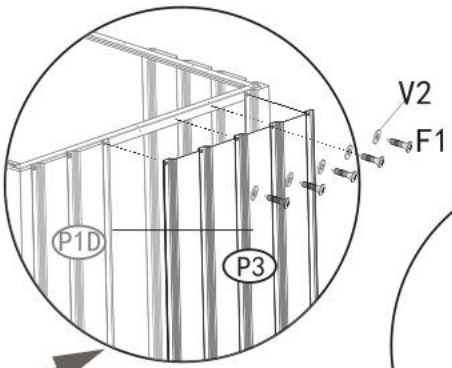

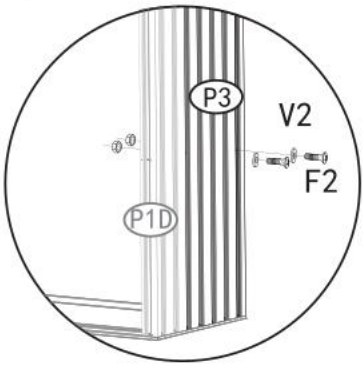

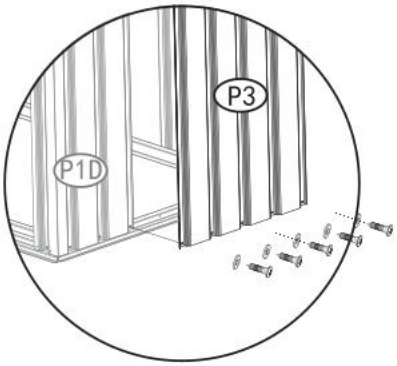

PART	NO.	Qty.
	9	1
	P3	1
	F2	1
	F1	8
	V2	8

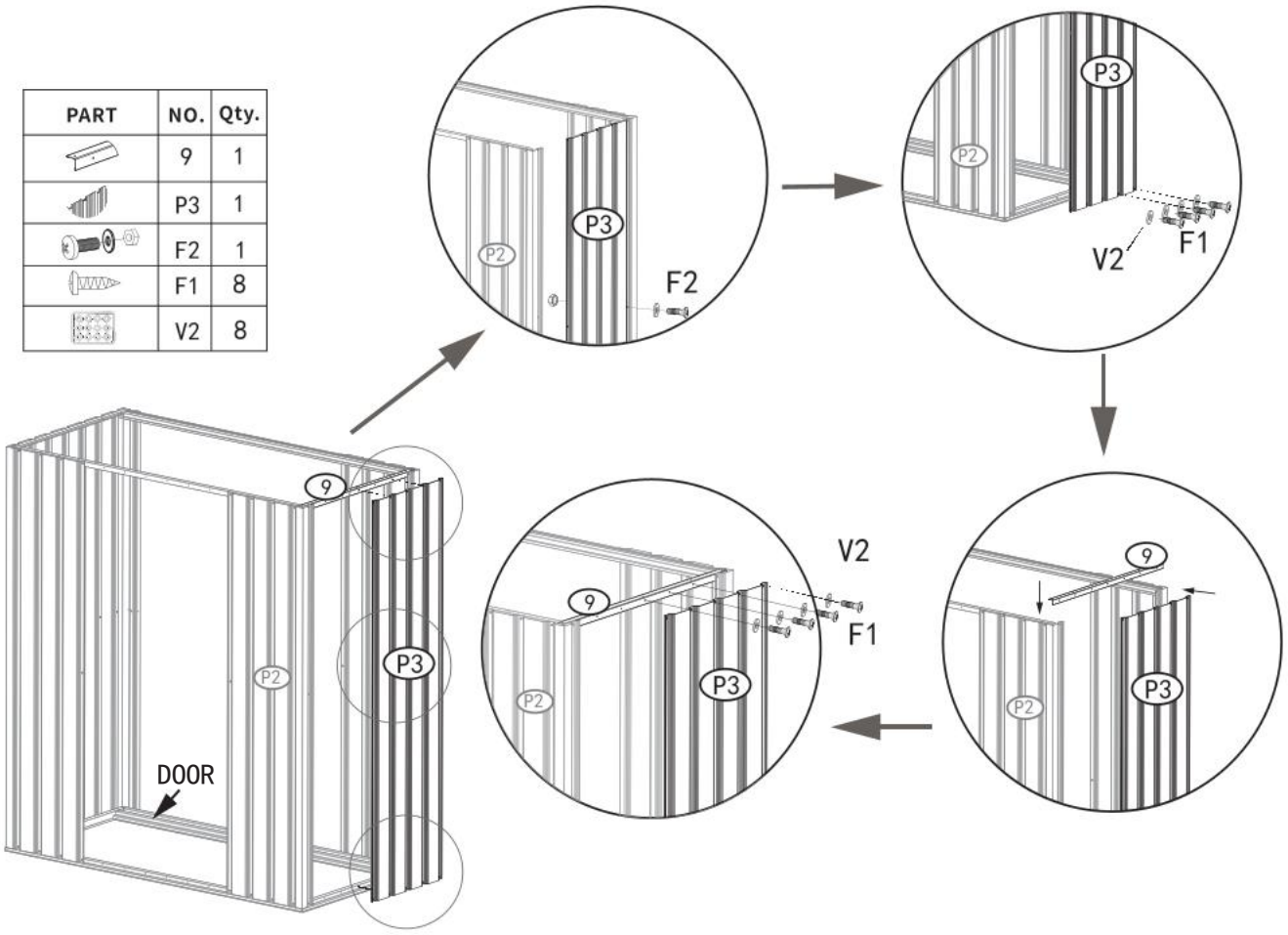

PART	NO.	Qty.
	P4B	1
	F2	2
	F1	6
	V2	6

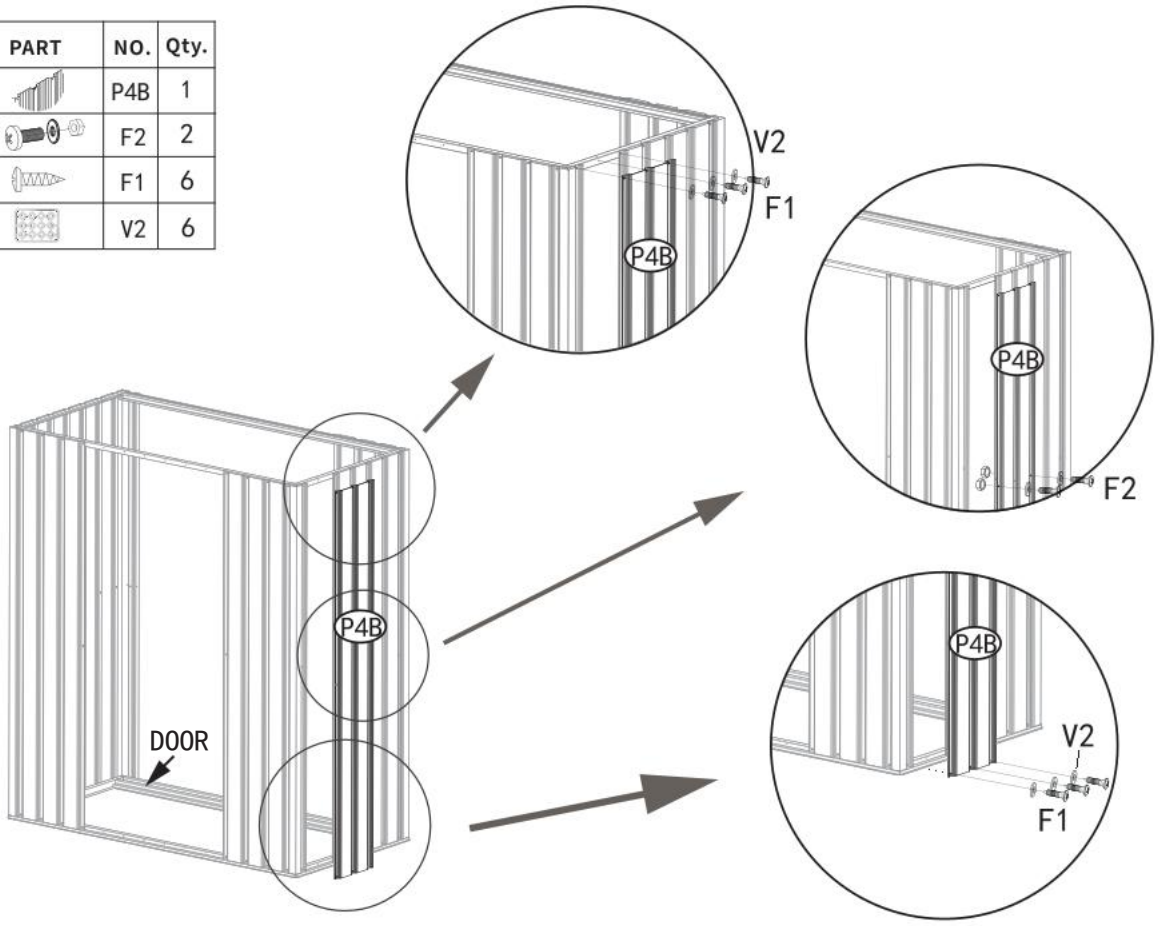

PART	NO.	Qty.
	P1A	1
	P3	1
	F2	3
	F1	16
	V2	16

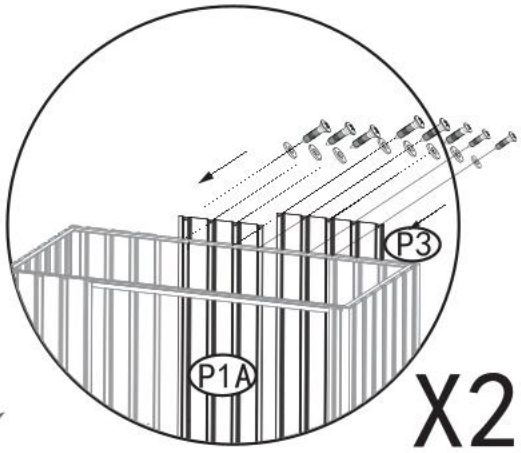

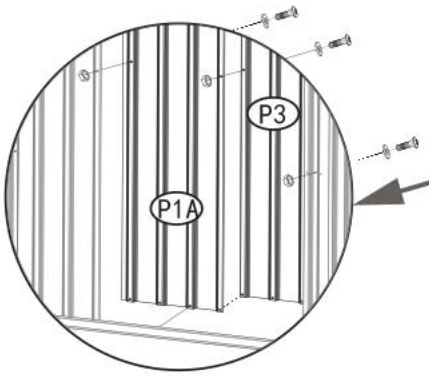

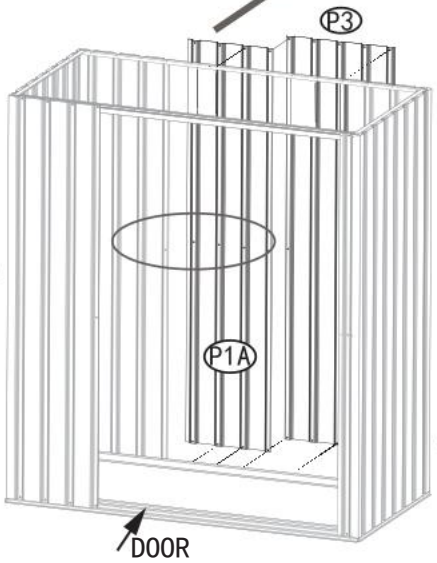

PART	NO.	Qty.
	6	1
	F1	1
	V2	1

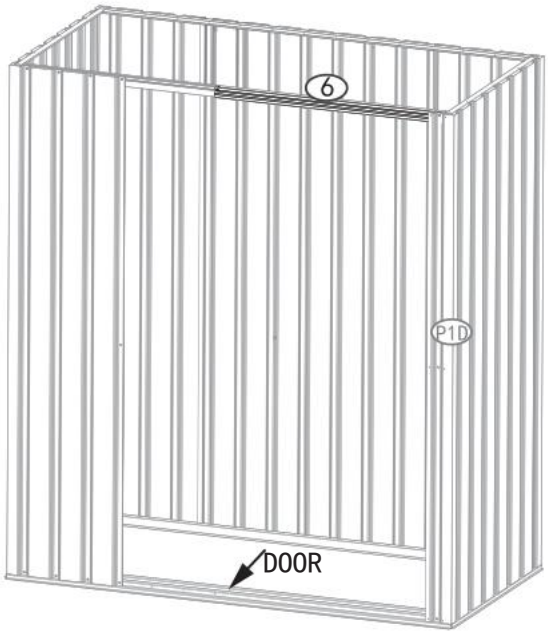



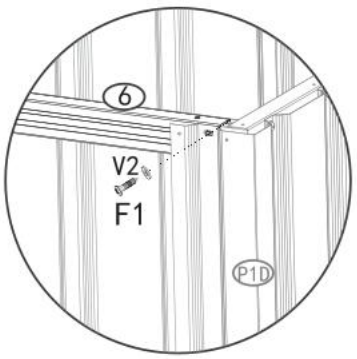

PART	NO.	Qty.
	P1	1
	F2	1
	F1	8
	V2	8

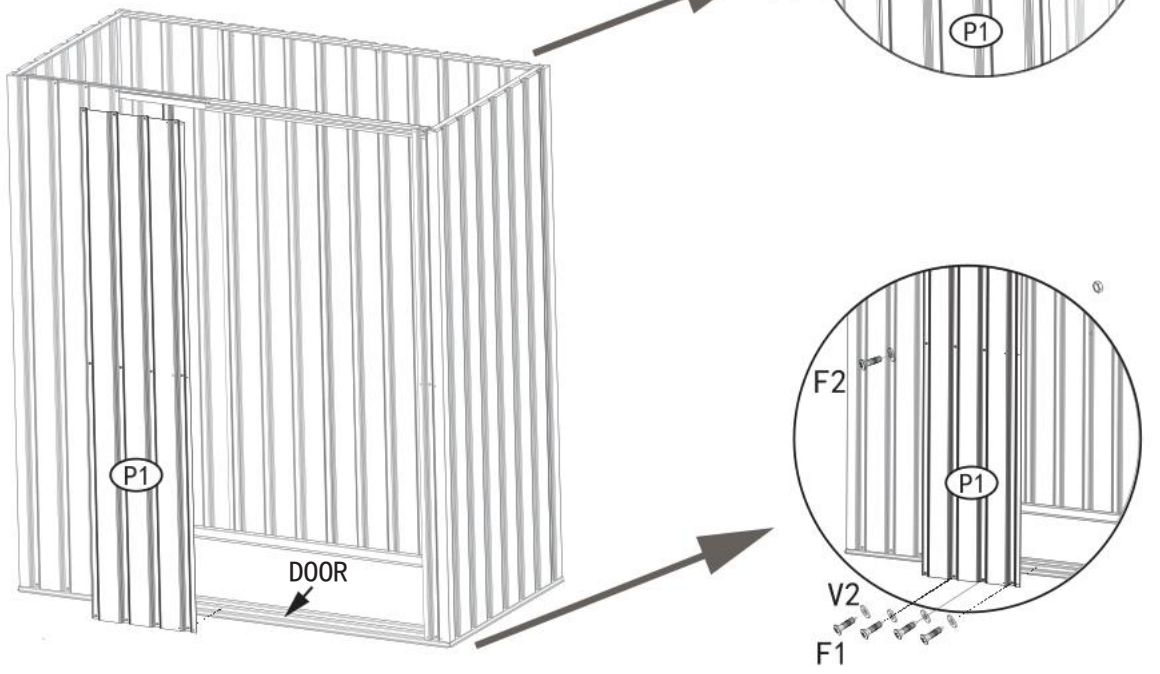

PART	NO.	Qty.
	25L	1
	25R	1
	F1	12
	V2	12

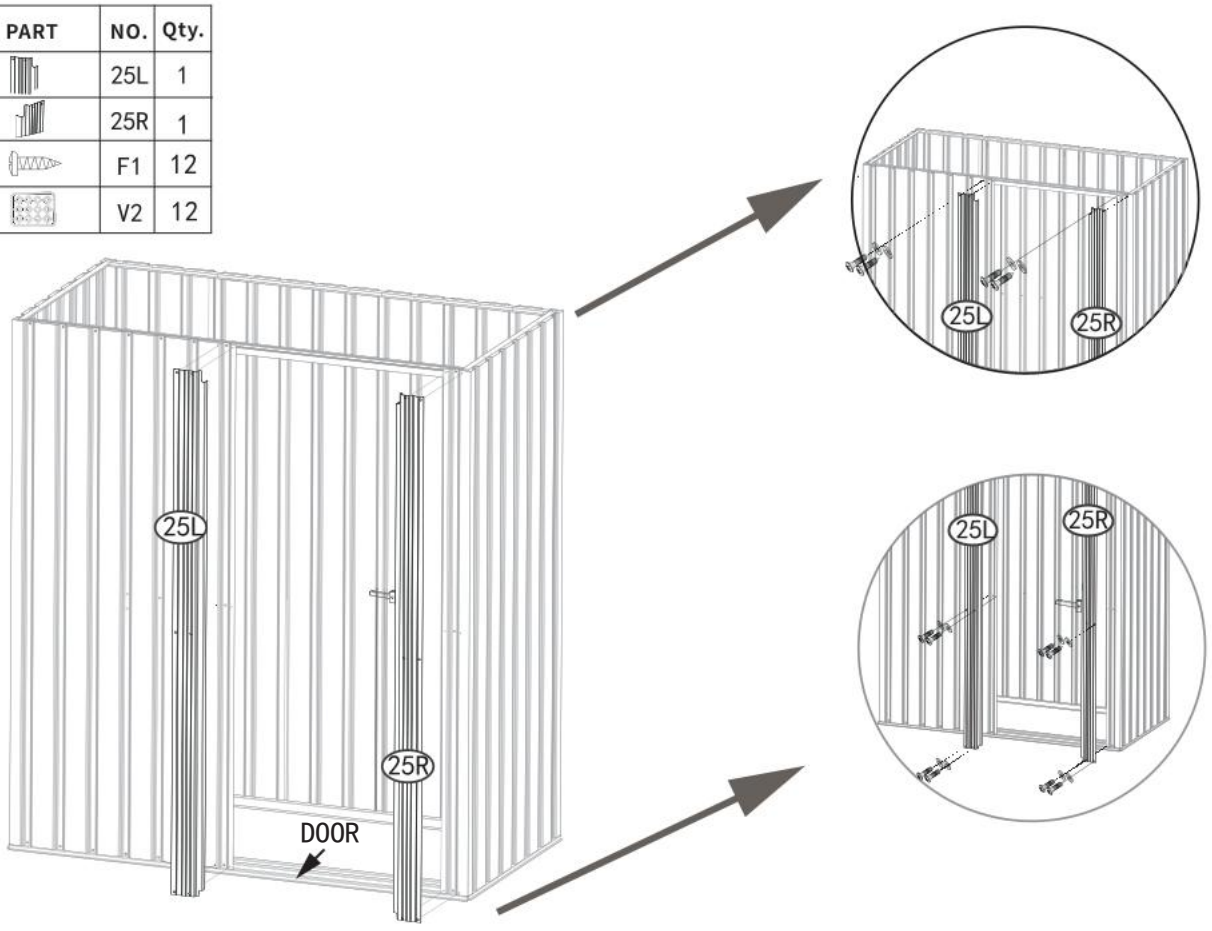

PART	NO.	Qty.
	12L	1
	F1	3
	V2	3

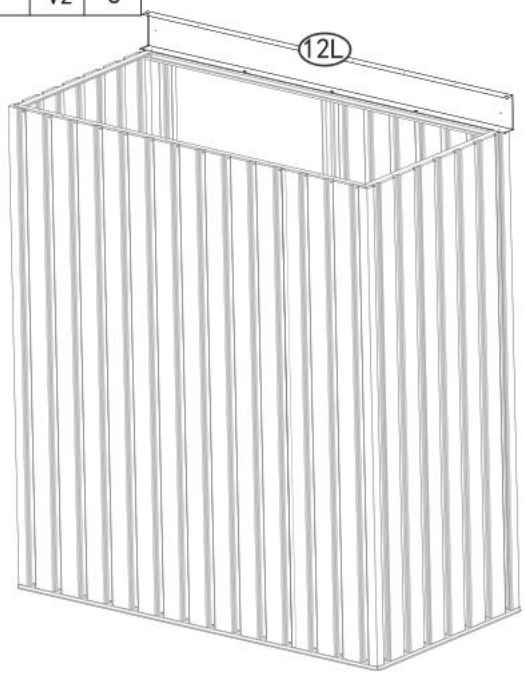

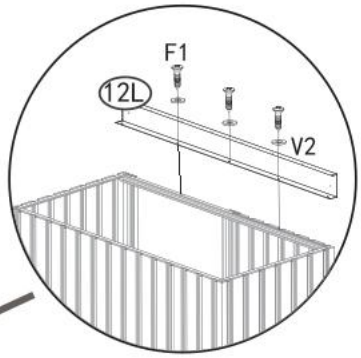

PART	NO.	Qty.
	21L	1
	25R	1
	F1	10
	V2	10
	F2	2

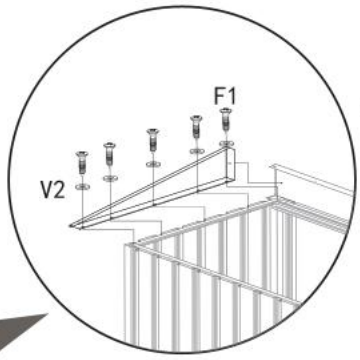

X2

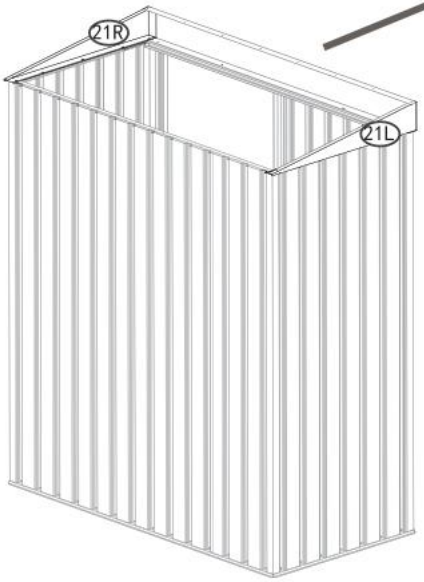

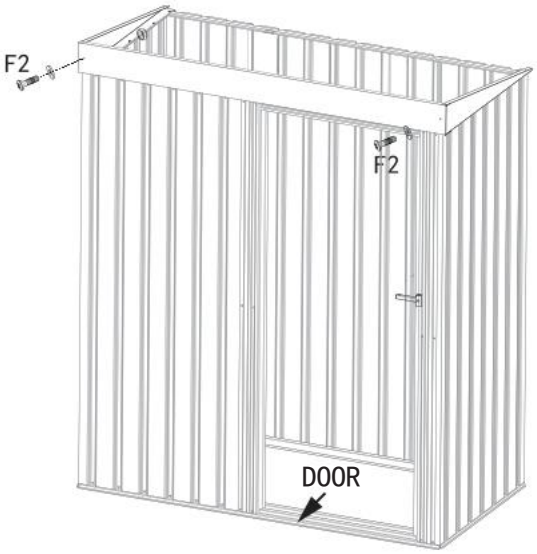

PART	NO.	Qty.
	P5	3
	P7	1
	F1	19
	V2	19

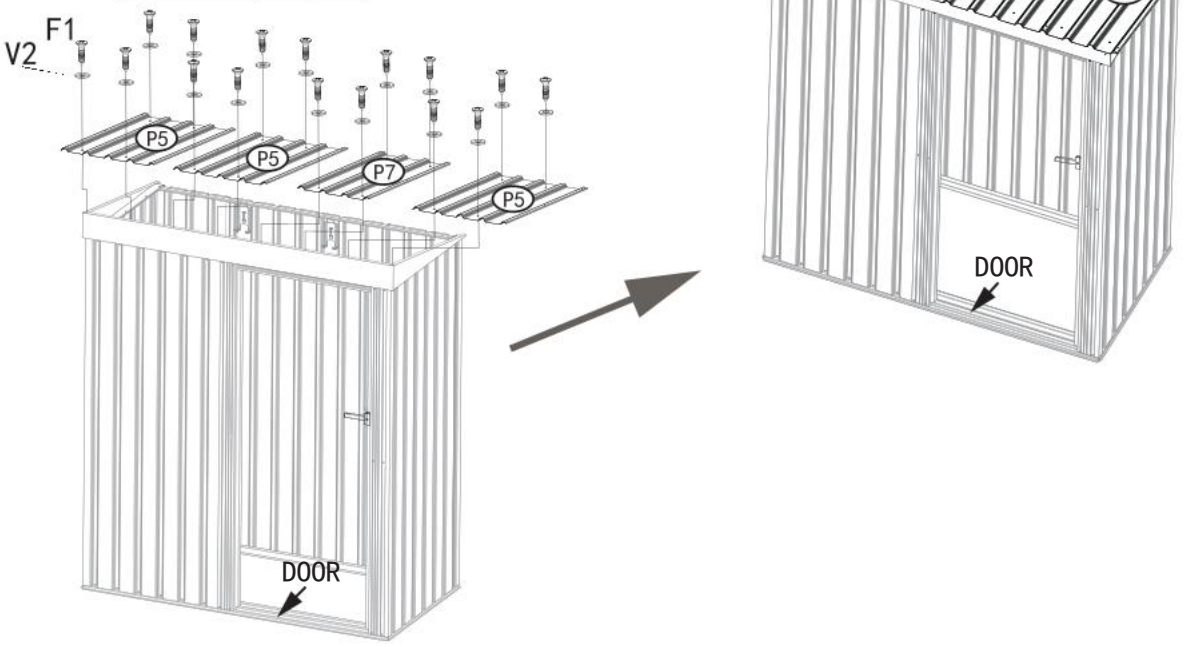

PART	NO.	Qty.
	16	1
	15	2
	GC	2
	F1	2
	V2	2

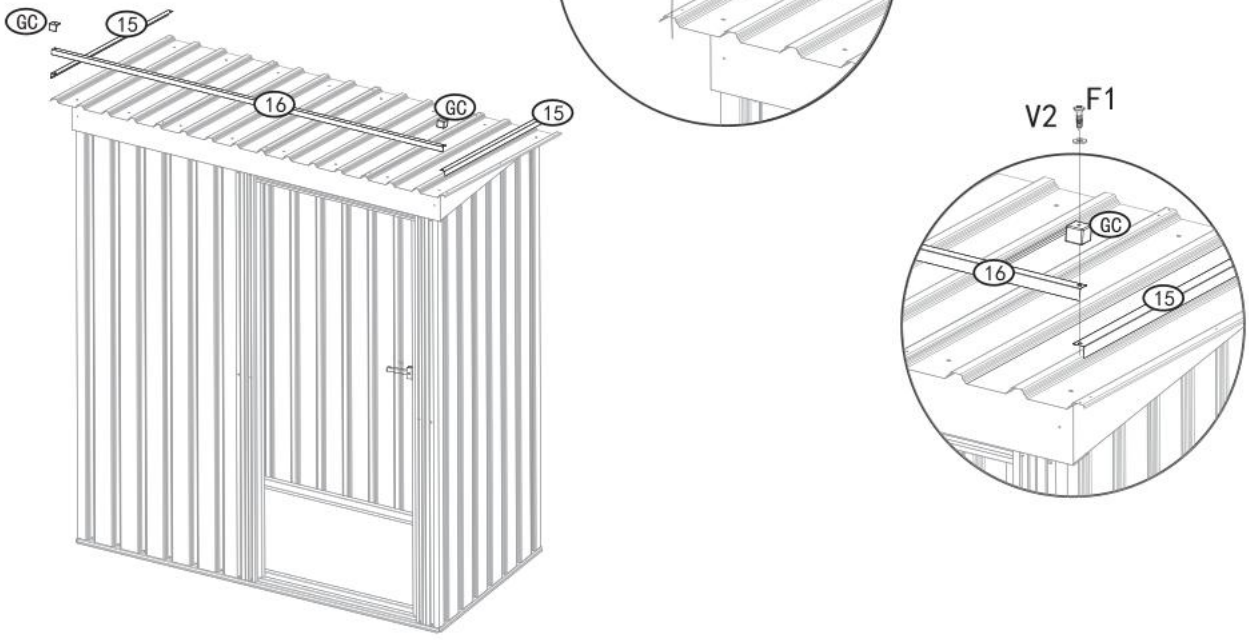

PART	NO.	Qty.
	17	1
	GC	2
	F1	4
	V2	4

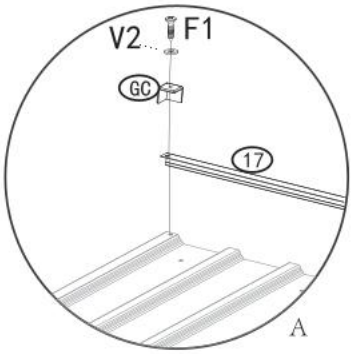

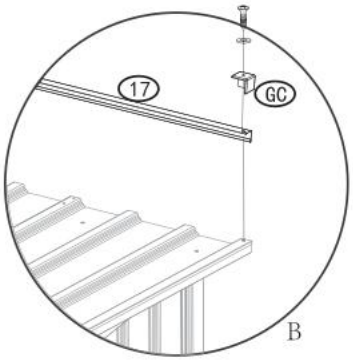

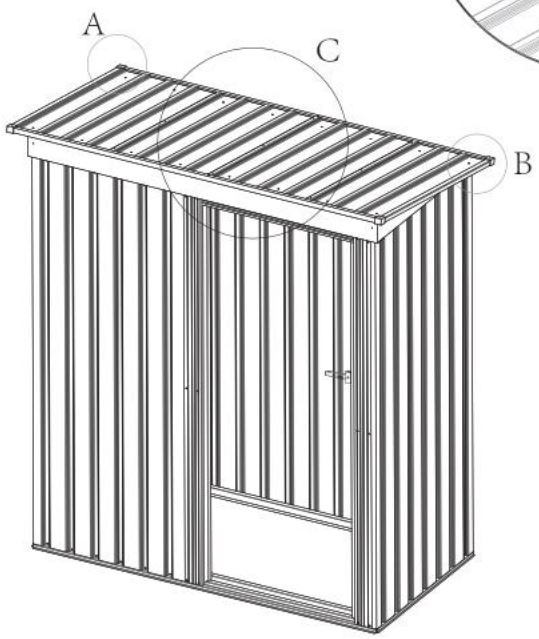

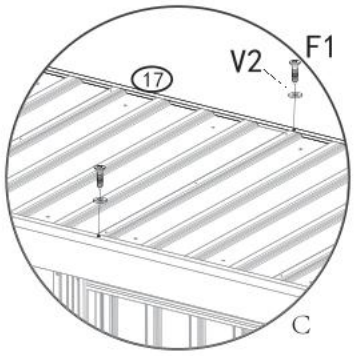

PART	NO.	Qty.
	20U	1
	20D	1
	D1R	1
	D1L	1
	F2	7
	GD	2

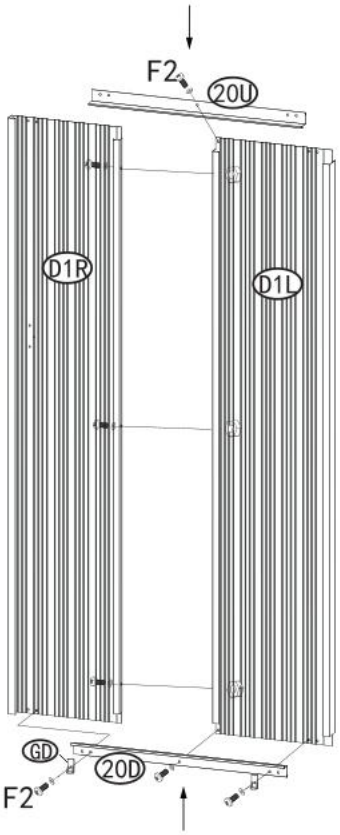

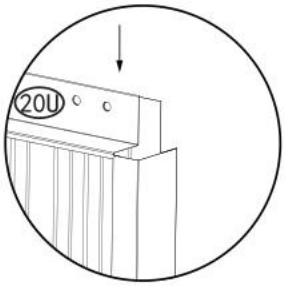

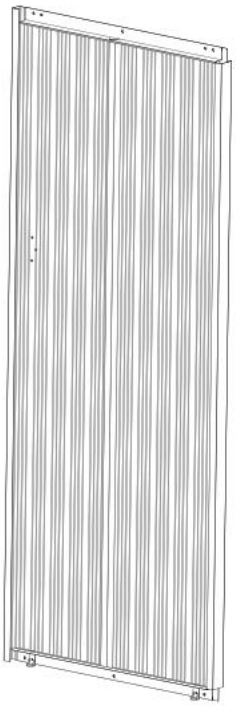

PART	NO.	Qty.
	GB	1
	F2	3

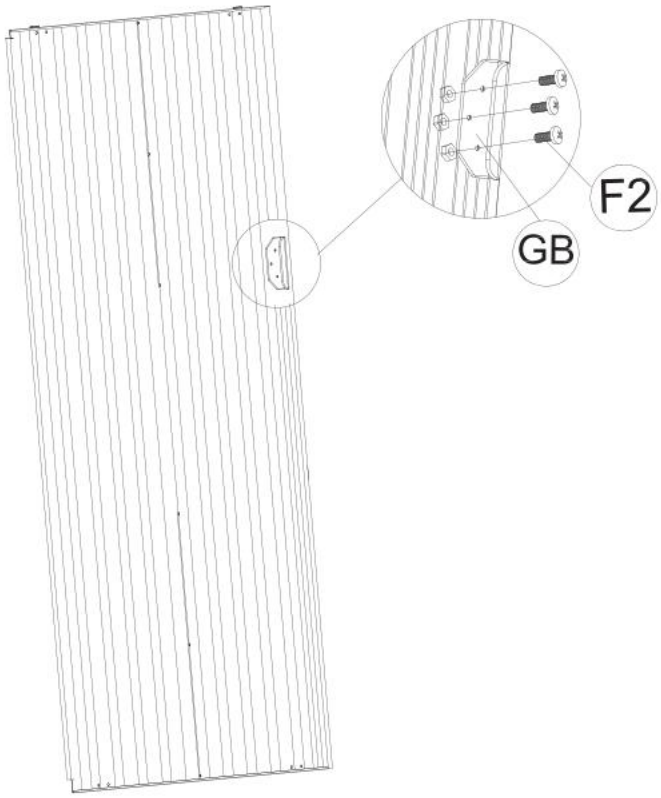

PART	NO.	Qty.
	F3	4



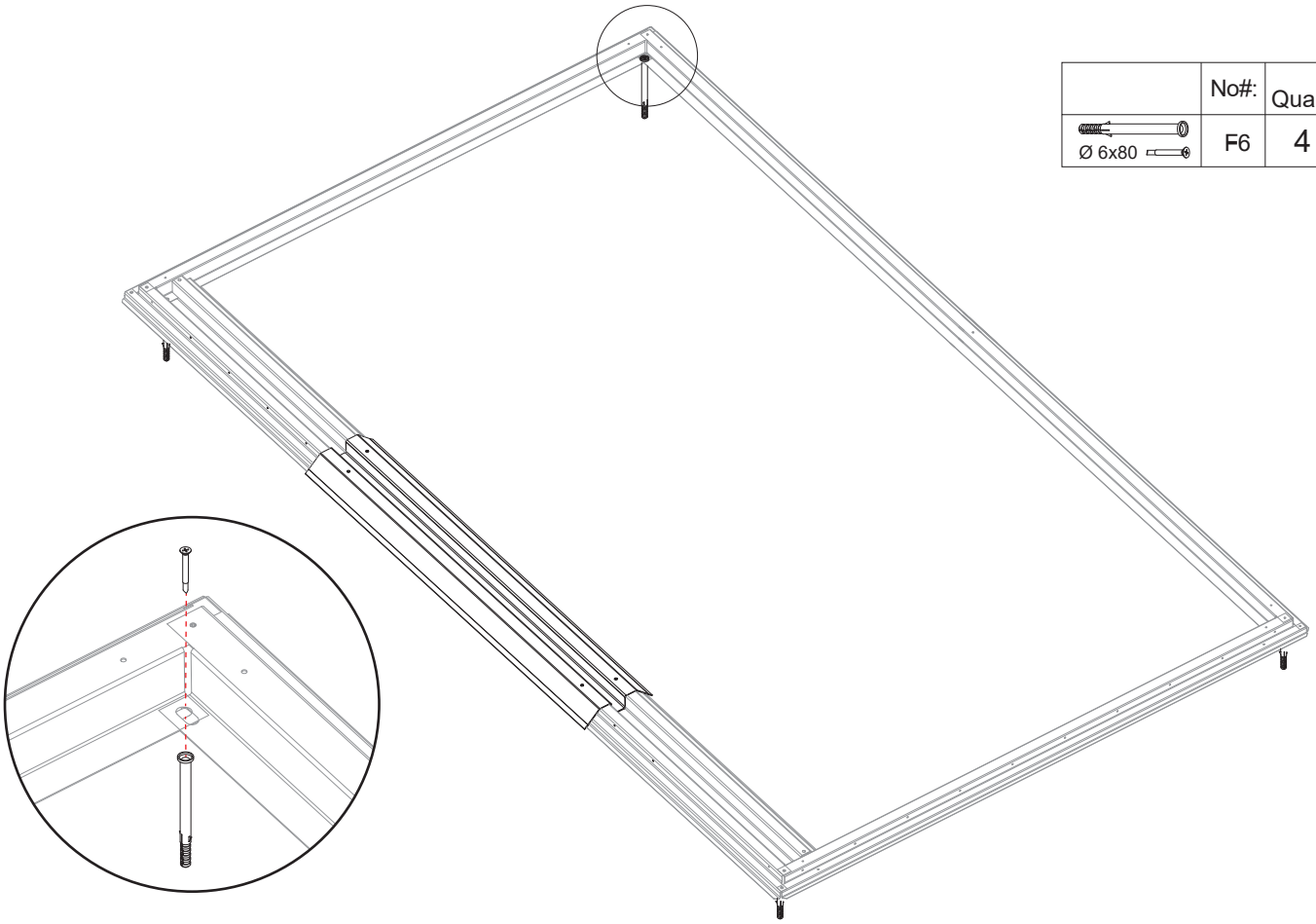

	No#:	Quantity
Ø 6x80	F6	4

